Parker Worldwide

Europe, Middle East, Africa

AE – United Arab Emirates, Dubai
Tel: +971 4 8127100
parker.me@parker.com

AT – Austria, St. Florian
Tel: +43 (0)7224 66201
parker.austria@parker.com

AZ – Azerbaijan, Baku
Tel: +994 50 2233 458
parker.azerbaijan@parker.com

BE/NL/LU – Benelux, Hendrik Ido Ambacht
Tel: +31 (0)541 585 000
parker.nl@parker.com

BG – Bulgaria, Sofia
Tel: +359 2 980 1344
parker.bulgaria@parker.com

BY – Belarus, Minsk
Tel: +48 (0)22 573 24 00
parker.poland@parker.com

CH – Switzerland, Etoy
Tel: +41 (0)21 821 87 00
parker.switzerland@parker.com

CZ – Czech Republic, Klecany
Tel: +420 284 083 111
parker.czechrepublic@parker.com

DE – Germany, Kaarst
Tel: +49 (0)2131 4016 0
parker.germany@parker.com

DK – Denmark, Ballerup
Tel: +45 43 56 04 00
parker.denmark@parker.com

ES – Spain, Madrid
Tel: +34 902 330 001
parker.spain@parker.com

FI – Finland, Vantaa
Tel: +358 (0)20 753 2500
parker.finland@parker.com

FR – France, Contamine s/Arve
Tel: +33 (0)4 50 25 80 25
parker.france@parker.com

GR – Greece, Piraeus
Tel: +30 210 933 6450
parker.greece@parker.com

HU – Hungary, Budaörs
Tel: +36 23 885 470
parker.hungary@parker.com

IE – Ireland, Dublin
Tel: +353 (0)1 466 6370
parker.ireland@parker.com

IL – Israel
Tel: +39 02 45 19 21
parker.israel@parker.com

IT – Italy, Corsico (MI)
Tel: +39 02 45 19 21
parker.italy@parker.com

KZ – Kazakhstan, Almaty
Tel: +7 7273 561 000
parker.easteurope@parker.com

NO – Norway, Asker
Tel: +47 66 75 34 00
parker.norway@parker.com

PL – Poland, Warsaw
Tel: +48 (0)22 573 24 00
parker.poland@parker.com

PT – Portugal
Tel: +351 22 999 7360
parker.portugal@parker.com

RO – Romania, Bucharest
Tel: +40 21 252 1382
parker.romania@parker.com

RU – Russia, Moscow
Tel: +7 495 645-2156
parker.russia@parker.com

SE – Sweden, Spånga
Tel: +46 (0)8 59 79 50 00
parker.sweden@parker.com

SK – Slovakia, Banská Bystrica
Tel: +421 484 162 252
parker.slovakia@parker.com

SL – Slovenia, Novo Mesto
Tel: +386 7 337 6650
parker.slovenia@parker.com

TR – Turkey, Istanbul
Tel: +90 216 4997081
parker.turkey@parker.com

UA – Ukraine, Kiev
Tel: +48 (0)22 573 24 00
parker.poland@parker.com

UK – United Kingdom, Warwick
Tel: +44 (0)1926 317 878
parker.uk@parker.com

ZA – South Africa, Kempton Park
Tel: +27 (0)11 961 0700
parker.southafrica@parker.com

North America

CA – Canada, Milton, Ontario
Tel: +1 905 693 3000

US – USA, Cleveland
Tel: +1 216 896 3000

Asia Pacific

AU – Australia, Castle Hill
Tel: +61 (0)2-9634 7777

CN – China, Shanghai
Tel: +86 21 2899 5000

HK – Hong Kong
Tel: +852 2428 8008

IN – India, Mumbai
Tel: +91 22 6513 7081-85

JP – Japan, Tokyo
Tel: +81 (0)3 6408 3901

KR – South Korea, Seoul
Tel: +82 2 559 0400

MY – Malaysia, Shah Alam
Tel: +60 3 7849 0800

NZ – New Zealand, Mt Wellington
Tel: +64 9 574 1744

SG – Singapore
Tel: +65 6887 6300

TH – Thailand, Bangkok
Tel: +662 186 7000

TW – Taiwan, Taipei
Tel: +886 2 2298 8987

South America

AR – Argentina, Buenos Aires
Tel: +54 3327 44 4129

BR – Brazil, Sao Jose dos Campos
Tel: +55 800 727 5374

CL – Chile, Santiago
Tel: +56 2 623 1216

MX – Mexico, Toluca
Tel: +52 72 2275 4200

© 2019 Parker Hannifin Corporation. All rights reserved.

Zalsman Catalogue 4100-ONLINE/UK-INT'L 02/2019

EMEA Product Information Centre
Free phone: 00 800 27 27 5374
(from AT, BE, CH, CZ, DE, DK, EE, ES, FI, FR, IE, IL, IS, IT, LU, MT, NL, NO, PL, PT, RU, SE, SK, UK, ZA)

US Product Information Centre
Toll-free number: 1-800-27 27 537

www.parker.com

Your local authorized Parker distributor

Parker

Industrial Tube Fittings Europe
Technical Handbook

Industrial Tube Fittings Europe

Technical handbook/Catalogue 4100/UK

Parker

ENGINEERING YOUR SUCCESS.

Parker's Motion & Control Technologies

At Parker, we're guided by a relentless drive to help our customers become more productive and achieve higher levels of profitability by engineering the best systems for their requirements.
It means looking at customer applications from many angles to find new ways to create value. Whatever the motion and control technology need, Parker has the experience, breadth of product and global reach to consistently deliver. No company knows more about motion and control technology than Parker.

For further info call
00800 27 27 5374

Aerospace

Key Markets
- Aftermarket services
- Commercial transports
- Engines
- General & business aviation
- Helicopters
- Launch vehicles
- Military aircraft
- Missiles
- Power generation
- Regional transports
- Unmanned aerial vehicles

Key Products
- Control systems & actuation products
- Engine systems & components
- Fluid conveyance systems & components
- Fluid metering, delivery & atomization devices
- Fuel systems & components
- Fuel tank inerting systems
- Hydraulic systems & components
- Thermal management
- Wheels & brakes

Climate Control

Key Markets
- Agriculture
- Air conditioning
- Construction Machinery
- Food & beverage
- Industrial machinery
- Life sciences
- Oil & gas
- Precision cooling
- Process
- Refrigeration
- Transportation

Key Products
- Accumulators
- Advanced actuators
- CO_2 controls
- Electronic controllers
- Filter driers
- Hand shut-off valves
- Heat exchangers
- Hose & fittings
- Pressure regulating valves
- Refrigerant distributors
- Safety relief valves
- Smart pumps
- Thermostatic expansion valves

Hydraulics

Key Markets
- Aerial lift
- Agriculture
- Alternative energy
- Construction machinery
- Forestry
- Industrial machinery
- Machine tools
- Marine
- Material handling
- Mining
- Oil & gas
- Power generation
- Refuse vehicles
- Renewable energy
- Truck hydraulics
- Turf equipment

Key Products
- Accumulators
- Cartridge valves
- Electrohydraulic actuators
- Human machine interfaces
- Hybrid drives
- Hydraulic cylinders
- Hydraulic motors & pumps
- Hydraulic systems
- Hydraulic valves & controls
- Hydrostatic steering
- Integrated hydraulic circuits
- Power take-offs
- Power units
- Rotary actuators
- Sensors

Pneumatics

Key Markets
- Aerospace
- Conveyor & material handling
- Factory automation
- Life science & medical
- Machine tools
- Packaging machinery
- Transportation & automotive

Key Products
- Air preparation
- Brass fittings & valves
- Manifolds
- Pneumatic accessories
- Pneumatic actuators & grippers
- Pneumatic valves & controls
- Quick disconnects
- Rotary actuators
- Rubber & thermoplastic hose & couplings
- Structural extrusions
- Thermoplastic tubing & fittings
- Vacuum generators, cups & sensors

Electromechanical

Key Markets
- Aerospace
- Factory automation
- Life science & medical
- Machine tools
- Packaging machinery
- Paper machinery
- Plastics machinery & converting
- Primary metals
- Semiconductor & electronics
- Textile
- Wire & cable

Key Products
- AC/DC drives & systems
- Electric actuators, gantry robots & slides
- Electrohydrostatic actuation systems
- Electromechanical actuation systems
- Human machine interface
- Linear motors
- Stepper motors, servo motors, drives & controls
- Structural extrusions

Filtration

Key Markets
- Aerospace
- Food & beverage
- Industrial plant & equipment
- Life sciences
- Marine
- Mobile equipment
- Oil & gas
- Power generation & renewable energy
- Process
- Transportation
- Water Purification

Key Products
- Analytical gas generators
- Compressed air filters & dryers
- Engine air, coolant, fuel & oil filtration systems
- Fluid condition monitoring systems
- Hydraulic & lubrication filters
- Hydrogen, nitrogen & zero air generators
- Instrumentation filters
- Membrane & fiber filters
- Microfiltration
- Sterile air filtration
- Water desalination & purification filters & systems

Fluid & Gas Handling

Key Markets
- Aerial lift
- Agriculture
- Bulk chemical handling
- Construction machinery
- Food & beverage
- Fuel & gas delivery
- Industrial machinery
- Life sciences
- Marine
- Mining
- Mobile
- Oil & gas
- Renewable energy
- Solenoid valves
- Transportation

Key Products
- Check valves
- Connectors for low pressure fluid conveyance
- Deep sea umbilicals
- Diagnostic equipment
- Hose couplings
- Industrial hose
- Mooring systems & power cables
- PTFE hose & tubing
- Quick couplings
- Rubber & thermoplastic hose
- Tube fittings & adapters
- Tubing & plastic fittings

Process Control

Key Markets
- Alternative fuels
- Biopharmaceuticals
- Chemical & refining
- Food & beverage
- Marine & shipbuilding
- Medical & dental
- Microelectronics
- Nuclear Power
- Offshore oil exploration
- Oil & gas
- Pharmaceuticals
- Power generation
- Pulp & paper
- Steel
- Water/wastewater

Key Products
- Analytical Instruments
- Analytical sample conditioning products & systems
- Chemical injection fittings & valves
- Fluoropolymer chemical delivery fittings, valves & pumps
- High purity gas delivery fittings, valves, regulators & digital flow controllers
- Industrial mass flow meters/controllers
- Permanent no-weld tube fittings
- Precision industrial regulators & flow controllers
- Process control double block & bleeds
- Process control fittings, valves, regulators & manifold valves

Sealing & Shielding

Key Markets
- Aerospace
- Chemical processing
- Consumer
- Fluid power
- General industrial
- Information technology
- Life sciences
- Microelectronics
- Military
- Oil & gas
- Power generation
- Renewable energy

Key Products
- Dynamic seals
- Elastomeric o-rings
- Electro-medical instrument design & assembly
- EMI shielding
- Extruded & precision-cut, fabricated elastomeric seals
- High temperature metal seals
- Homogeneous & inserted elastomeric shapes
- Medical device fabrication & assembly
- Metal & plastic retained composite seals
- Shielded optical windows
- Silicone tubing & extrusions
- Thermal management
- Vibration dampening

KOYO

Parker

ENGINEERING YOUR SUCCESS.

Tube fittings catalogue/Table of contents

Introduction ..... page 2

Detailed table of contents ..... page 14

Function of fittings ..... A

Systematic fitting selection ..... B

Performance data C

Dimensioning ..... D

Tube assembly ..... E

Fitting assembly ..... F

Trouble shooting guide ..... G

Tooling ..... H

DIN fittings I

O-Lok® ..... J

Triple-Lok® ..... K

Ferulok® L

Weld fittings ..... M

High Pressure Hydraulic Flanges ..... N

Adapters ..... O

Valves ..... P

Rotary fittings ..... Q

Parker SensoControl® Diagnostic equipment ..... R

Tubes ..... S

Tube clamps ..... T

Custom Products ..... U

Alphanumerical index V

kovaz.cz

Parker Hannifin – Professionals in System Solutions

Parker Hannifin is the world's leading manufacturer of motion and control technologies. The company develops and designs systems and precision solutions for mobile and industrial applications as well as the aerospace industry. Parker Hannifin employs around 56,000 people in 50 countries.

The Company's main business objective is to help customers achieve maximum productivity for their applications with the support of professional Parker engineers. This is achieved through innovative, top quality and reliable proprietary products. These can be delivered quickly thanks to a worldwide sales network. Parker is the consummate provider of customized system solutions.

Video

Parker

The strength of Parker

Under the umbrella of the Fluid Connectors Group Europe, Parker Hannifin brings together the connector technology of the brands Ermeto, Legris Transair, Legris Connectic, Legris Autoline, Polyflex, ITR, Rectus, and Tema. Whether it be tube fittings, hose fittings, or hoses, Parker offers the most comprehensive range available from a single supplier.

As part of the Fluid Connectors Group Europe, High Pressure Connectors Europe (HPCE) is one of the largest businesses in Parker. The foundation stone for enduring business success was laid with the development of the Ermeto cutting ring. Nowadays, flanges, valves, tubing, measuring systems, and tube forming and pre-assembly machines, besides the classic DIN and SAE fittings, are manufactured in several locations.

Whether standard parts or application-specific special developments, the Parker product programme offers an appropriate solution for every customer requirement.

Always new product ideas
Innovations secure the future

Without new product ideas there would be no progress: Parker has an efficient product development programm in the form of the Winovation Program. From the initial idea through to market readiness, every stage is checked to exacting criteria before it moves on to the next project phase. This is how the customers are guaranteed benefical products ready for series production, that work reliably from the first use and over the long term.

EO-2

For over 25 years, EO-2 fitting series have stood for leak-free performance with elastomer seals, long service lives thanks to above-average corrosion resistance. Significant cost and time savings thanks to higher rated pressures.

www.parker.com/eo-2

Complete Piping Solutions

Complete Piping Solutions is the high-quality complete solution for weld-free connection technology for hydraulic systems. From advising to designing and pre-assembly to delivery and installation – all with outstanding quality and reliability. Major time and cost savings.

Video

Parker

KOVOT.CZ

The Parflange F37 product range is a personnel and environmentally-friendly technology. In comparison to conventional welding, production times are reduced by more than half.

Parflange® F37

For tube and pipeline connections. Outstanding seal, high mechanical strength. For tubes from 16 to 165 mm exterior diameter, wall thickness up to 9 mm and pressures up to 420 bar.

High Performance flange

vibration-resistant. Resistant to tear-out. For mobile hydraulic and industrial applications, working pressures up to 420 bar and tube diameters from 25-88 mm. Wall thickness up to 14 mm. Flange hole pattern in accordance with ISO 6162-1, ISO 6162-2 and ISO 6154.

Video

Serviceman Plus

Mobile measurement technology for everyday use. “Plug & play” with automatic sensor recognition. Simply insert and measure. New memory concept with Nano USB stick. USB-PC interface for convenient analysis and documentation of measurements via the SensoWin software.

www.parker.com/hpce

Video

Serviceman Plus – Benefits in hand The Serviceman Plus is a highly robust, mobile, and easy to operate measurement device for many measurement tasks in mobile hydraulic or stationary hydraulic systems.

Markets make the brand

The right concepts for every need

Partnership and collaboration with customers is what makes our product policy at Parker unique. With a refined feel for the needs of users and the requirements of different markets, Parker engineers develop the solutions they need.

The result is a range of products that bear the hallmarks of consistent high quality in materials and production, and offer reliable function at a world-class level.

www.parker.com/hpce

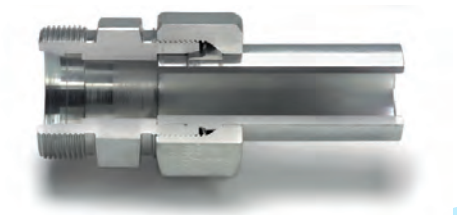

EO-PSR

The world's most widespread high-pressure fittings system: Highest pressure resistance and extreme corrosion resistance thanks to Cr(VI)-free surfaces. Perceptibly reduced tightening torques. Considerable assembly advantages.

EO-3®

EO-3®, a world first: The innovative tube fitting system with visual installation recognition. For tube and hose applications.

EO-2

The tried and tested Dry Technology concept. Has a large volume elastomeric seal on the tube side and Cr(VI)-free surfaces, which are very corrosion resistant. Suitable for 800 bar (PN) in S Series and up to 500 bar (PN) in the L Series.

Parker

EO2-Form

The positively locking high-pressure form connector.
Special features - classical EO-2 sealing ring and cold-formed tubing. Impressively superior mechanical strength and maximum pull-out resistance. For 800 bar (PN) in S Series and up to 500 bar (PN) in L Series.

O-Lok®

Fittings series with face-side O-ring seal.
Suitable for a wide range of tube wall thicknesses, Applicable to metric and inch tubes and hose connections.

37° flare system.
The most widely used fittings system for inch tubes. For pressures up to 500 bar for smaller sizes and up to 140 bar for larger dimensions.

Triple-Lok®

The Parker Service Master Plus. Portable multi-function hand-held measuring instrument.
Measures, stores, monitors and analyses pressure, temperature, flow and rotational speeds. Multiple measurement and triggering methods. Measurement and display of more than 50 channels.

SensoControl®

Certified products are...

The Parker management of quality and environment is certified by ISO 9001, ISO/ TS 16949, DIN/EN/ISO 14001 and IRIS.

...official proof for the use that Parker components satisfy the highest standards for design features, material quality and machining. When applying the product at the point of installation, approval is frequently an absolute necessity.

Whether ABS, LR or DNV, Parker products regularly pass the international and independent accreditation bodies' stringent tests. So suitability for reliable application even under the toughest conditions is officially confirmed.

Please look for approvals at www.parker.com/hpce

...of excellent quality

The manufacture of quality high-performance fitting components starts already at the ordering stage for the crack-tested primary material, which must be in accordance with Parker material specifications specially determined for product manufacture. Through the processing stages required both before and after production, those properties which will fulfil constantly increasing material requirements are guaranteed.

To ensure that the high quality of the materials used and the tube fittings made from them are guaranteed, continuous tests e.g. spectral analysis and dye penetration tests, are carried out in our own laboratories and testing facilities. The fittings systems' resistance to corrosion and static and dynamic loads are put through their paces on in-house test stands.

Top-class products result from selected materials and the most up-to-date manufacturing methods. Functionally reliable and durable. Quality pays off.

VOICE OF THE MACHINE

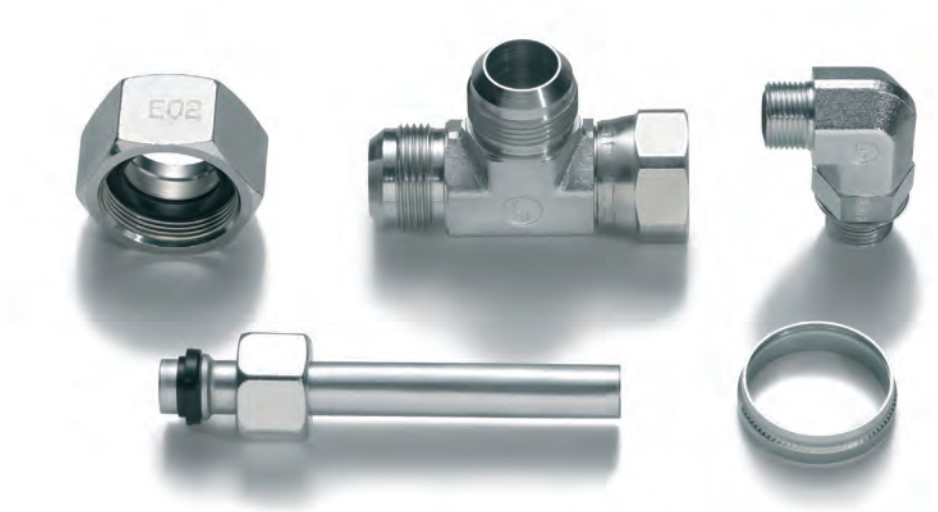

The Parker Training Programme

The High Pressure Connectors Europe‘s education programme is widely diversified. From theoretical product training through to practical instruction, a large variety of training opportunities is offered. This multiple choice training concept from High Pressure Connectors Europe, in addition to the regular events at the Bielefeld location, also offers the possibility of arranging customer-tailord in-house training. These training units are executed with the support of the very latest media and take place in modern teaching rooms. With the knowledge they will have gained, participants are in a position to operate more efficiently and to select and use the HPCE fittings programme advangeously and safely. Ask Your Parker sales office for this training programme.

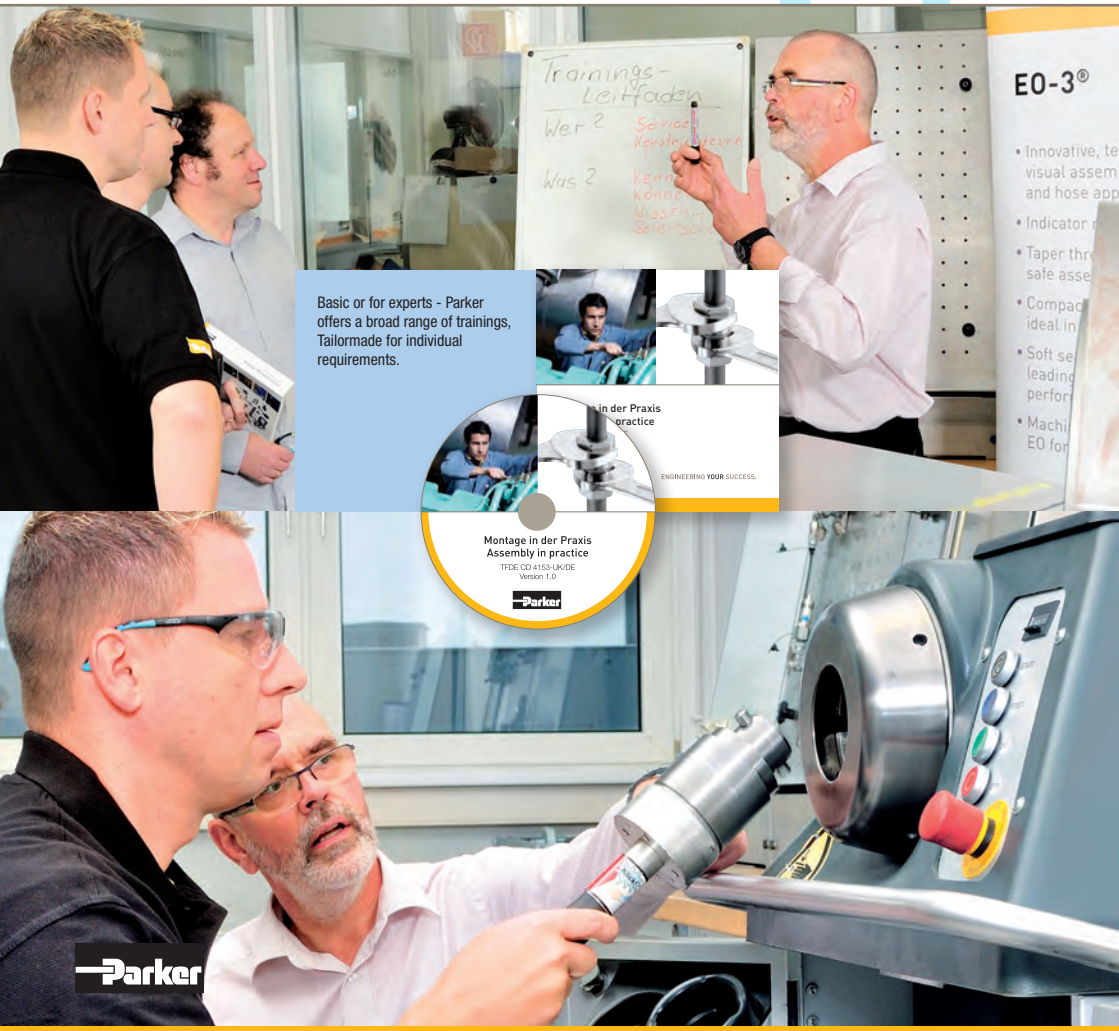

Service before and after sales

To support its products, Parker offers its customers a comprehensive selection of services, i.e.

The Parker Store
Providing outstanding expert consultation, it was one of the first self-service shops for hydraulic and pneumatic fittings - and much more besides. It offers immediate manufacture of hose assemblies. Up to 3,000 items from stock.

Parker Hose Doctor
This emergency service can be reached via a toll-free hotline 24 hours a day, 7 days a week. Hose Doctor vans have fully-equipped workshops, spare parts and hydraulic oils on board. This enables the technician to rapidly replace faulty assemblies on site.

Tech Services
Together with the customer, Parker engineers assess on site the optimal operation of the equipment in question. They are present from the design stage through to installation and carry out training for operatives.

Kitting Services
Should the customer require a particular set of fittings and related items, Parker can supply these items under a single reference number as a totally complete assembly set.

Parker Logistic Services
Parker products can be supplied either directly from Parker or through a certified distributor on a just-in-time basis straight to the assembly point.

www.parkerstore.com

More than a product:
Parker offers an elaborated service to the customers.

Online: High Pressure Connectors Europe

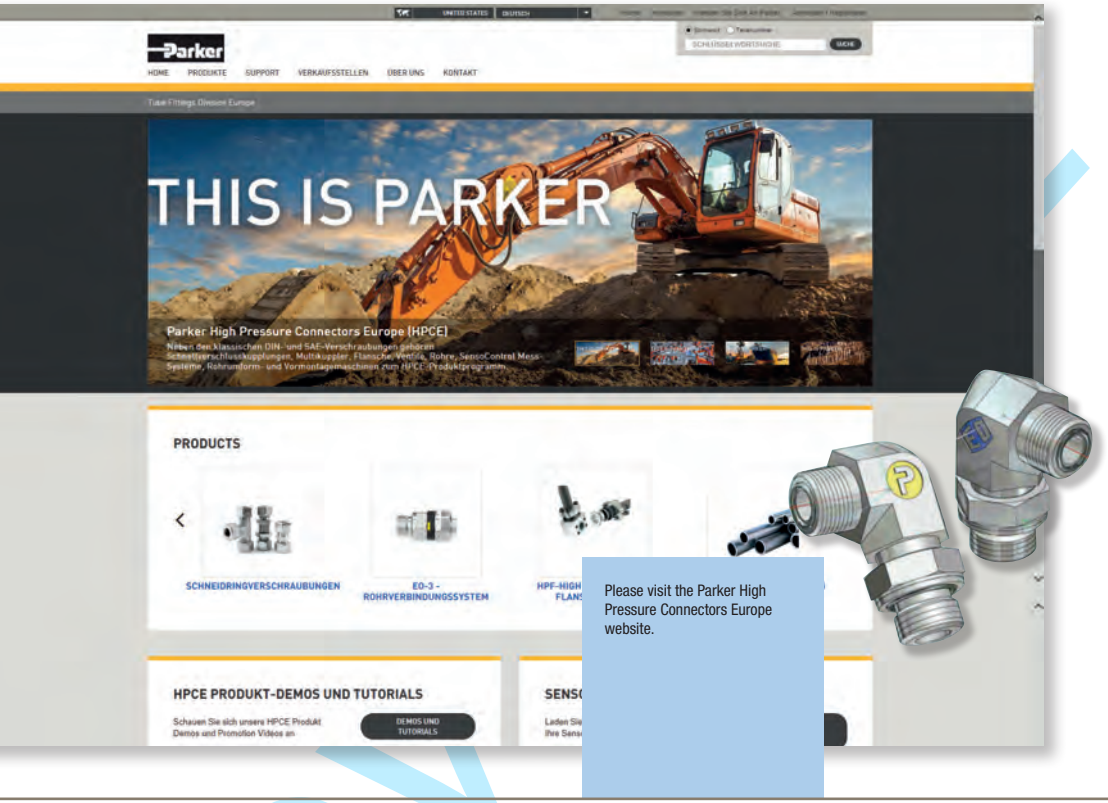

Please visit the Parker High Pressure Connectors Europe website.

Whether it be product information, catalogues, brochures or approvals, all the information you may require can quickly be found on, and downloaded from, our website

www.parker.com/hpce

Or if in your design activities you need CAD data for any product, simply visit our website

http://parker.partcommunity.com/portal/portal/parker

and you can then download the relevant data after prior registration.

* Free CAD download for more than 10 years for customers and partners

Parker

Detailed Table of Contents

Function of fittings ..... Section A

Tube Connection Systems DIN 3

EO-PSR: Progressive Stop Ring for steel fittings..... 4

EO progressive ring DPR for stainless steel fittings.... 6

EO-2 9

EO-3® 13

EO2-FORM..... 20

EO-Weld nipple 23

O-Lok®..... 24

Parflange® orbital flaring process 27

Triple-Lok®..... 30

Adapters..... 34

Thread configurations 38

Systematic fitting selection ..... Section B

Introduction 2

Design criteria for fitting selection..... 2

Best solution..... 2

Material selection: Fitting material..... 3

Material selection: Sealing material..... 4

LL/L/S Series selection for EO fittings 5

Tube end selection 6–7

Flange type selection 8

Port/Stud selection..... 9–11

Orientable fitting selection..... 12–13

Standardization 14

Approvals 14

Tube Specifications..... 15–16

Fitting selection summary 17

Dry technology
versus traditional technology 17–20

Performance data..... Section C

Pressure rating 2

Pressure reductions and temperatures 2

Materials..... 3

Surface treatment..... 4

Fluid compatibility 5

Biodegradable oils..... 8

Flow characteristics 9

Flow diameter and wall thickness 13

Dimensioning ..... Section D

Overview EO 24° cone connections..... 3

Not recommended 4

EO 24° cone end
(DIN 3865/ISO 8434-1)/dimension 4

EO 24°-DKO swivel connector
(DIN 3861/DIN EN ISO 8434-4)/dimensions..... 5

Overview O-Lok® connections..... 6–7

O-Lok® end
(ISO 8434-3/SAE J1453)/dimensions..... 8

O-Lok® swivel connector
(ISO 8434-3/SAE J1453)/dimensions..... 9

Overview Triple-Lok® connections 10–11

Triple-Lok® end
(ISO 8434-2/SAE J514)/dimensions..... 12

Triple-Lok® swivel connector
(ISO 8434-3/SAE J514)/dimensions..... 13

DIN 60° cone end
(DIN 7631)/dimensions 14

Adapter 60° cone end
(ISO/DIS 8434-6)/dimensions..... 15

NPSM Swivel adapters
(SAE J516)/dimensions 16

Male stud ends/
Port end dimensions for tube fittings 17–19

Kovak.cz

Detailed Table of Contents

Tube assembly ..... **Section E**

Fitting assembly ..... **Section F**

Trouble shooting guide ..... **Section G**

Tooling ..... **Section H**

Parker tube fabricating equipment 4

Manual assembly tools for EO/EO-2 5

VOMO – Pre-assembly tools for EO/EO-2 tube connections 5

KONU – Cone-template for tools VOMO/MOK/MOSI 6

Selection guide: Checking equipment for EO assembly 6

Distance Gauge for Assembly AKL 7

Manual assembly devices for EO/EO-2 tube connections 8

Machine selection guide 8

HVM-B Pre-assembly tool 9–10

EO-KARRYMAT portable pre-assembly device for EO tube connections 11

Assembly machines for EO/EO-2 and Triple-Lok® 12

Machine selection guide 12

EOMAT ECO Mobile assembly machine for EO-2 and PSR hydraulic fittings 13-14

EOMAT UNI Assembly and flaring machine 15–18

EO PSR/DPR and EO-2 assembly tools for EOMAT/EO-KARRYMAT 19

Ferulok assembly tools for EOMAT/EO-KARRYMAT 20

EOMAT PRO – Economic assembly machine for EO-2 and progressive ring fittings 21-22

Assembly tools for EO fittings 23

The WorkCenter F3 24

The WorkCenter PRO22 24

EO-KARRYFORM 25

WorkCenter for EO2-FORM and EO-3® high pressure tube connections 28–30

Flaring tools for Triple-Lok® tubes 31

Flaring tool selection guide 31

Manual flaring tools for Triple-Lok® tubes 32

Combination impact flarer 1004 for small dimension metric tube 32

Combination impact flarer 210A for small dimension inch tube 32

Impact flaring tools for metric and inch tube 33

KARRYFLARE Portable flaring device for Triple-Lok® 34

Parflare ECO mobile flaring machine for Triple-Lok® hydraulic fittings 35–36

37° flaring tools for KARRYFLARE device and Parflare ECO, EOMAT UNI, II and III 37

Assembly machines for O-Lok® and Triple-Lok® 38

Parflange® machine selection guide 38

Parflange® 1025 workshop machine for O-Lok® and Triple-Lok® 39-40

Parflange® 50 WorkCenter 41

Parflange® 50 Basic WorkCenter 42

Parflange® 50 Pro WorkCenter 43

Parflange® 50 Ordering 44

Tooling for Parflange® machines 45

Parflange® tool identification 46

Parflange® tools for O-Lok® 47

Parflange® tools for Triple-Lok® 48

Lubricants 49

EO-NIROMONT lubricant for fitting assembly 49

Cutting and bending tools 50

AV 6/42 – Tube saw square 50

BAV 6/12 – Combined tube bending and cutting tool 51

In-Ex tube deburring tool 51

BV 6/18 – Tube bending tool 52

kovaz.cz

Detailed Table of Contents

BV 20/25 – Tube bending tool 53
Par-Lok wrench 54
WZK – Tool boxes 55
O-ring assembly tools 56
Corg O-ring installation tool for O-Lok® 56
O-ring pick for O-Lok® 56
Port cutting tools 57
Counterbore tools and thread taps for metric ports 57
Counterbore tools and thread taps for straight SAE thread ports 57
Operation of port cutting tools 58
Thread identification 59
Thread identification kit 59
Portboard 59
HPCE sample case 60

DIN fittings ..... Section I
Contents 2–5
How to order 6
How to order EO fittings 7
Codes for fittings/styles shapes 8–9

O-Lok® ..... Section J
Contents 2–3
How to order O-Lok® fittings 4

Triple-Lok® ..... Section K
Contents 2–3
How to order Triple-Lok® fittings 4

Ferulok® ..... Section L
Contents 2–3
How to order Ferulok® fittings 4

Weld fittings ..... Section M
Contents 2

High Pressure Hydraulic Flanges ..... Section N
Introduction 4
Design and construction 4
Methods of connection 5
How flange connections work 6
Assembly of flanges 7
Bolt torques for SAE flanges 8
Technical data 9
Order codes bolts and O-rings 10
Features, advantages and benefits 11
How to order 12
Visual index 13
SAE Flange clamps 16
SAE Flange adapters
EO 24° cone end 21
BSPP 60° cone end 25
Male NPT thread 27
O-Lok® ORFS end 28
Triple-Lok® 37° flare end 31
Butt weld end 34
Socket weld end 39
SAE Full flanges
Female BSPP thread 42
Female NPT thread 46
EO 24° cone end 49
BSPP 60° cone end 51
Triple-Lok® 37° flare end 53
O-Lok® ORFS end 55
Butt weld end 57
Socket weld end 60
Complete flange connections 64

Kovai.cl

Detailed Table of Contents

SAE Flange accessories 67

Gear pump flanges

EO 24° cone end 75

O-Lok® ORFS end 78

Male/Female BSPP thread 80

Socket weld end 82

Special pump size flanges 83

Aluminium flanges 86

ISO 6164 Square flanges 88

Adapters ..... **Section O**

Contents 2–3

Valves ..... **Section P**

Contents 2–7

Rotary fittings ..... **Section Q**

Contents 2

Parker SensoControl® ..... **Section R**

Contents 2

Tubes ..... **Section S**

General recommendations for tubes 3

Seamless EO steel tubes
Material E235+N / St. 37.4 (1.0308)
Acc. to DIN EN 10305-4 8-9

Seamles EO steel tubes
Material E355+N / St.52.4 (1.0580)
Acc. to DIN EN 10305-4 10

Seamless EO stainless steel tubes
Material 316Ti (1.4571)
Acc. to DIN EN 10216/5, DIN EN 10305-1 11

Seamless EO stainless steel tubes
Material 316L (1.4404)
Acc. to ASTM A269/A213, DIN EN 10305-4 12

Seamless EO stainless steel tubes
Material 316L (1.4404)
Acc. to DIN EN 10216-5, DIN 10305-1 13

Seamless EO tube bends 90°
Material E235N (St. 37.4) and 1.4571 14

Tube clamps ..... **Section T**

Contents 2

Technical data 3

Material properties 4

Special materials 5

Assembly instruction 6

Series A Light series (DIN 3015-1) 8

Series B Double series (DIN 3015-3) 24

Series C Heavy series (DIN 3015-2) 29

Multiclamps 38

Hydraulic steel clamps 46

Tube clamps with Elastomer inlay 48

Fixed adaptor 51

Custom Products ..... **Section U**

Alphanumerical index ..... **Section V**

kovai.in

Function of fittings

Index

Tube Connection Systems DIN A3
EO-PSR: Progressive Stop Ring for steel fittings A4
EO progressive ring DPR for stainless steel fittings A6
EO-2 ..... A9
EO-3® A13
EO2-FORM A20
EO-Weld nipple A23
O-Lok® A24
Parflange® orbital flaring process A27
Triple-Lok® A30
Adapters A34
Thread configurations A38

kovaz.cz

Function of fittings

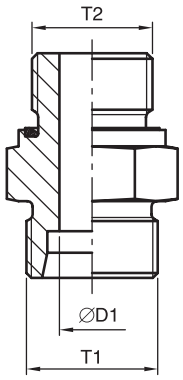

1) Weld nipple for steel and stainless steel EO-DUR fittings, series L + S

- Excellent leakage free performance due to elastomeric sealing element
- Low requirements on tube quality

2) EO2-FORM Soft sealed tube forming system for steel and stainless steel EO-DUR fittings, series L + S

- Based on EO-2: Optimal leak free performance due to replaceable elastomeric sealing element
- Cutting ring free – best possible alternative to welding for applications, where form closing connections are required
- Assembly-proof – reduction of error sources due to machined pre-assembly/tube forming

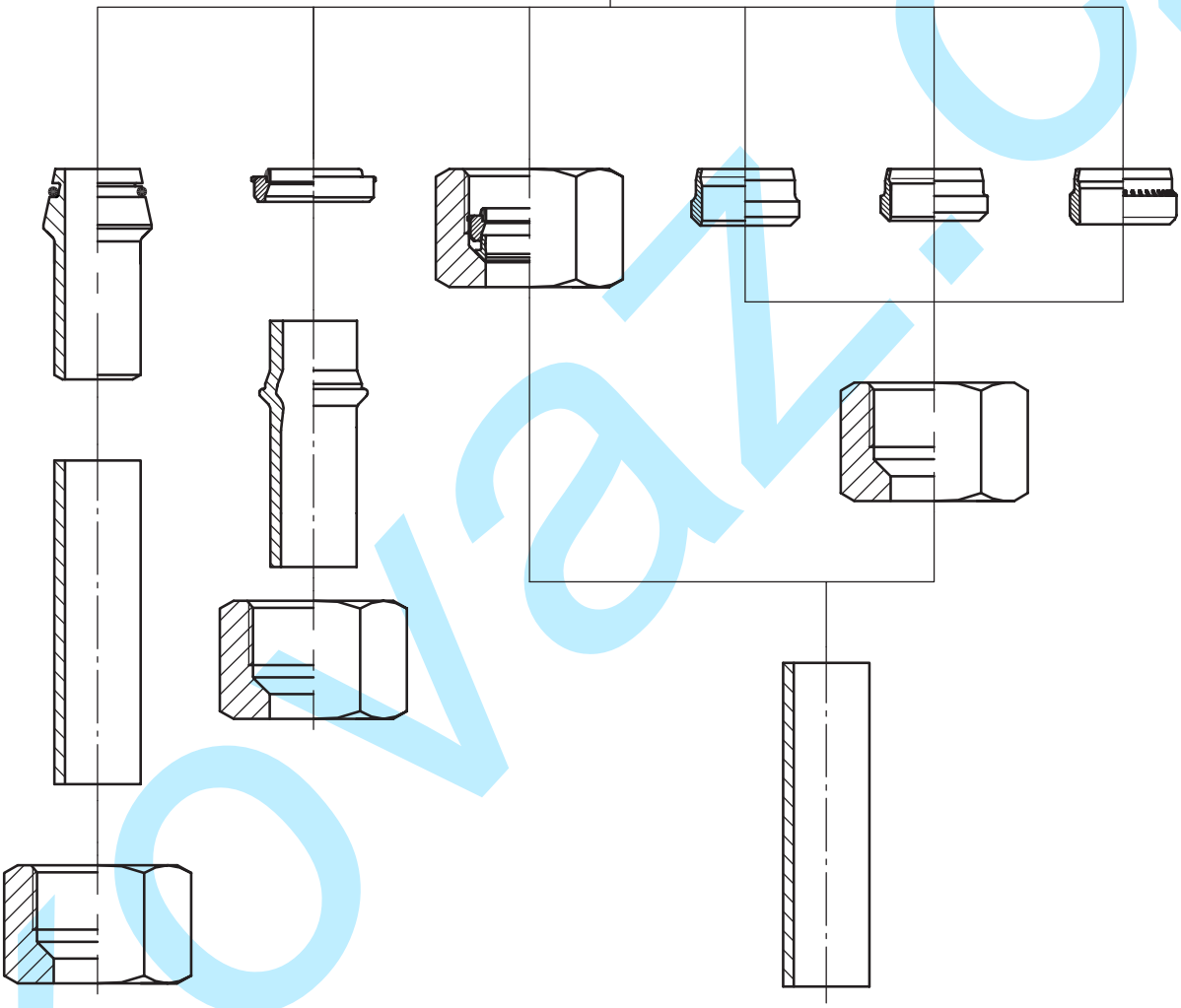

3) EO-2 Soft sealed bite-type system for steel and stainless steel EO-DUR fittings, series L + S

- Optimal leak free performance due to elastomeric sealing element
- Easy assembly “on block” – also directly in fitting body
- Safety due to clear assembly check
- Replaceable sealing element

4) Cutting ring for steel and stainless steel EO-DUR fittings, series LL, as well as brass fittings, series L + S

- For decades approved cutting ring
- Tube clamping to transfer vibration and to protect the tube within the cutting area
- Spring effect – no settlement of the nut

5) DPR EO-progressive ring for stainless steel EO-DUR fittings, series L + S

- Especially adjusted to the requirements of stainless steel
- Optional in “SPH” finish – thereby despite of hardening no loss of corrosion resistance

6) EO-PSR Progressive Stop Ring for steel fittings, series L + S

- 2 cutting edges for optimal holding function and tear-off protection
- Over-assembly protection due to clear noticeable increase in force and stop shape
- Tube clamping to transfer vibration and to protect the tube within the cutting area

kovaz.cz

EO-PSR: Progressive Stop Ring for steel fittings

Introduction

The worldwide well-established high-pressure-fitting system is characterized by the highest pressure, Cr(VI)-free surface treatment with significantly higher corrosion resistance, and considerably reduced tightening torques.

The ingenious invention of the cutting ring system was made by the founder of Parker Ermeto in the late nineteen twenties. In 1934, this idea was patented and today it is just as useful as it was on the very first day. Considering the range of applications, quality, reliability and functional safety, the principle of the Parker's cutting ring fitting has been a leading system up to today.
Of course, this has only been possible by continuously adapting the original invention from 1934 to the practical requirements of state of the art technology. Thus, the first Parker Ermeto cutting ring has little left in common with the latest multifunctional EO-PSR cutting ring, the heart of EO-PSR.

The EO-PSR fitting meets the requirements of modern hydraulic systems. This is especially true for applications where the systems are exposed to extremely high loads.

EO-PSR is designed for metric tube and based on German Standards DIN 3861 and DIN 2353, which today are represented by the international standard ISO 8434-1. EO-PSR is available in "L"- and "S"-Series.

The EO-PSR (Progressive Stop Ring) is available for the steel fitting range. For stainless steel applications, the Progressive ring DPR 71 is used and the Cutting ring for brass fittings and series LL.

EO-PSR fitting features

The EO-PSR fitting produces high pressure, leak free connection of tubes and components in hydraulic systems. The basic function of EO-PSR is the controlled progressive bite of the EO-PSR into the tube due to a unique internal geometry.

The front cutting edge (A) has already started cutting into the tube before the second cutting edge (B) begins. As soon as both cutting edges have cut into the tube to the designed depth further advance is limited by the stop shape (C) and the new overtightening protection (D). Additionally, the special form of the EO-PSR with its dimples at the front shoulder section gives an assembly state control.

Owing to the design of both cutting edges and stop shape all forces arising are equally distributed. This distribution along with the specially designed interior collar (E) of the ring guarantees increased safety, particularly with regard to vibration and flexure stresses. Service vibration loading is not present in the areas of the tubing where the bite is made.

The stop shape as well as the overtightening protection cause a clear sharp increase in tightening forces. After assembly, a visible collar (F) of cut tube material must completely fill the space in front of the first cutting edge. A slight bowing up of the ring (G) is desirable. This spring effect provides permanent compensation for flexural vibration and settling effects in the thread of the fitting nuts.

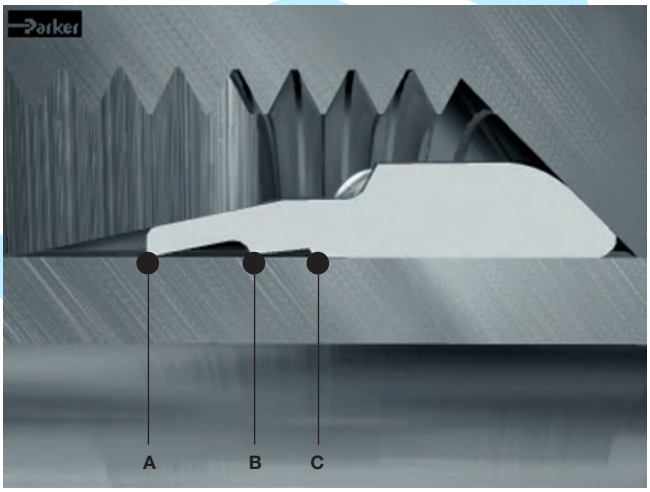

Before tightening the nut

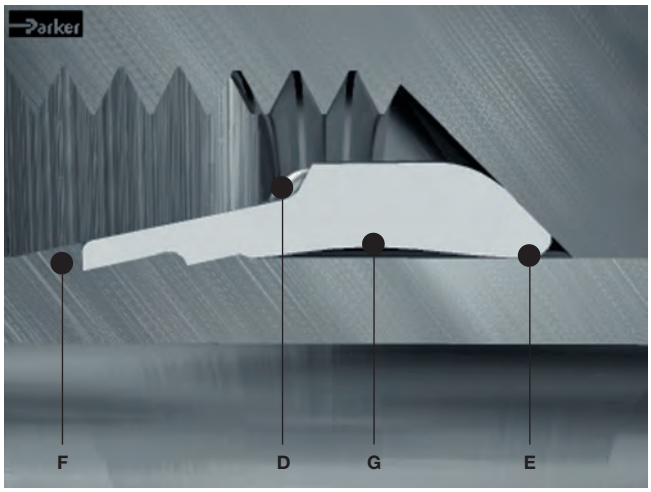

After tightening the nut

Assembly
Assembly process is according to the EO-Progressive ring instruction. The design allows a 100%-pre-assembly for an easier final assembly.

Features, advantages and benefits of EO-PSR fittings

- **High corrosion resistance** – The Cr(VI)-free surface treatment causes an average corrosion resistance of more than 500 hours to white rust.

- **High pressure** – Due to the application of even better materials combined with the special processing of individual components, EO-PSR can be used in applications of up to 800 bar (S series) and 500 bar (L series). EO-PSR considerably exceeds the DIN/ISO requirements and guarantees a 4-fold design factor. Thanks to the higher pressure levels, less expensive "L" series fittings can now be used instead of the heavier "S" series, which also is of benefit in limited or tight space applications.

- **EO-LUB** – Due to the special treatment of the larger sized nuts by the EO-LUB procedure (25S/28L and larger), the tightening torques of EO-PSR fittings have been reduced by 25%. This makes assembly easier and prevents underassembly, the most common reason for tube fitting failure.

- **Safe assembly** – Two distinctive cutting edges provide a progressive increase of the tightening torque of the EO-PSR. The noticeable end point of assembly contributes to maximum safety of assembly, and the multifunctional ring geometry prevents over-tightening.

- **Overtightening protection** – The special geometry of the EO-PSR prevents the overassembly of EO-PSR fittings.

- **Spring effect** – Thanks to the spring effect, re-tightening of the fitting is not necessary. Upon the completion of the assembly (due to the geometry, material and heat treatment) an elastic initial tension is achieved which compensates displacement effects in the thread and at the bite point of the tube.

- **Cr(VI)-free** – Due to its Cr(VI)-free treated surface, Parker Ermeto meets the requirements of the automotive industry which prohibits the use of Cr(VI) since 2007. The removal of Cr(VI) reflects Parker's ongoing commitment to an environmentally clean and safe production process.

- **Worldwide availability** – EO-PSR is available worldwide and meets the requirements of the applicable standards for 24° cutting ring fittings. The multifunctional EO-PSR can be used with all types, series and dimensions of the wide range of EO-PSR fittings.

The multifunctional EO-PSR

Classical application of the EO-PSR: Cranes

EO-DUR Progressive Ring DPR for stainless steel fittings

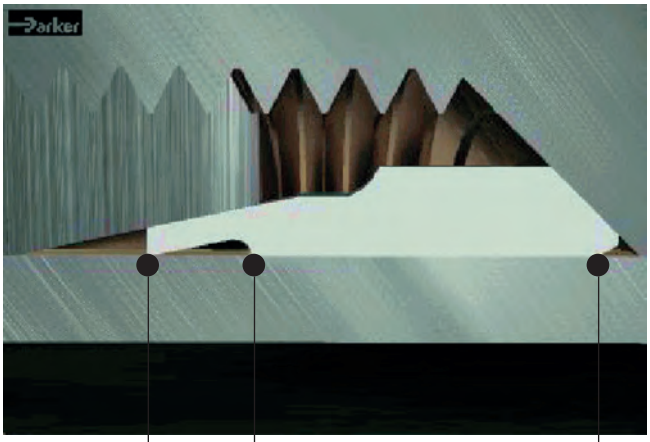

Before tightening the nut

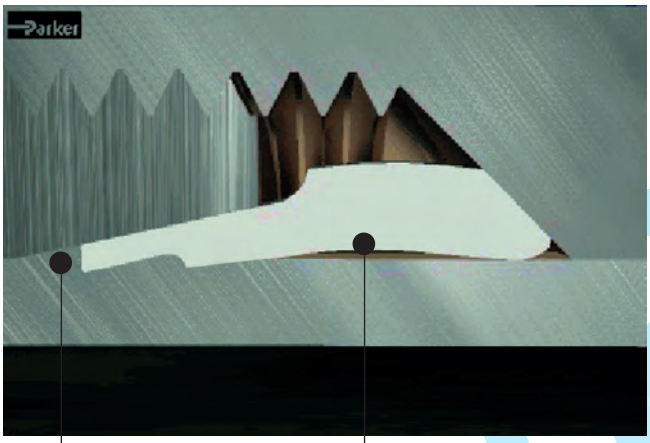

After tightening the nut

The proper assembly result is achieved by $1^1/_2$ turns of the nut.

The function of the EO stainless steel progressive ring fitting

The EO progressive ring fitting produces a low to high pressure, leak free connection of tubes and components in hydraulic systems. The basic function of the EO progressive ring is the controlled progressive bite of the ring into the tube due to its unique internal geometry. The design of the EO-DUR stainless steel progressive ring is based on three essential functions.

The front cutting edge (A) has already started cutting into the tube before the second cutting edge (B) starts. As soon as both cutting edges have cut into the tube to the designed depth further advance is limited.

Owing to the design of both cutting edges all forces arising are equally distributed. This distribution along with the specially designed interior collar (C) of the ring guarantees increased safety, particularly with regard to vibration and flexure stresses. The design and function of the cutting ring ensure that service vibration loading is not present in the areas of the tubing where the bite is made.

After assembly, a visible collar (D) of cut tube material must completely fill the space in front of the first cutting edge. With stainless steel tube and standpipe hose connections, the collar is smaller due to the harder material.

A slight bowing up of the ring (E) is desirable while this happens. This spring effect provides permanent compensation for flexural vibration and setting effects in the thread of the fitting nuts.

All EO-DUR stainless steel fittings show a special progressive ring design for best performance with stainless steel tubes. LL – series fittings and all brass fittings are equipped with a single bite “D”-ring.

The spring effect

① + ② + ③ = $1^1/_2$

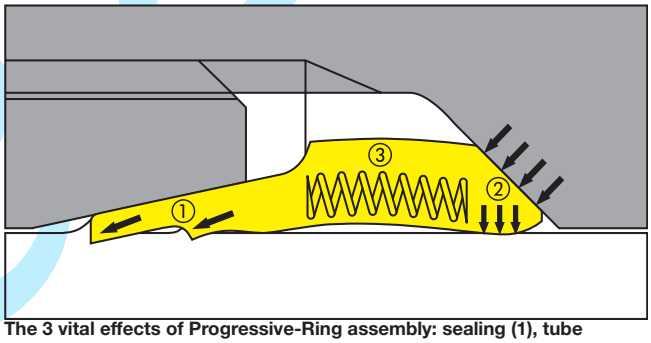

The 3 vital effects of Progressive-Ring assembly: sealing (1), tube clamping (2), spring effect (3).

During assembly of the EO progressive ring fitting, three essential functions are achieved:

① Tube bite

The tube bite guarantees the leak free sealing and ensures the necessary holding power for high operating pressures. After assembly, a collar of cut tube material in front of the cutting edge is the visible control for the proper function of the connection.

② Tube clamping

The rear section of the progressive ring is designed for clamping the tube firmly. This ensures that service vibration loading is not present in the tube bite area.

③ Spring effect

Towards the end of assembly, the special EO progres-

sive ring design, material and heat treatment allow a defined elastic deformation of the ring. This spring effect compensates subsidences of tube bite and threads, thus ensuring long term leakfree performance without retightening.

EO-DUR stainless steel products with silver plated threads

All threads of the EO-DUR stainless steel nuts are surface treated to reduce the tightening-torques by 40 % compared to non treated products. The treatment also avoids galling of the threads. Nuts larger than size 12S/15L are delivered with silver plated threads, all smaller sizes are treated with a special wax.

The EO-DUR Suparcased SPH cutting ring

On the basis of the proven progressive ring design, the suparcased stainless steel bite-type ring has been developed especially for aggressive internal and external media. The special geometry and thermochemical hardening process guarantee a permanently leak-proof and corrosion-resistant connection under extreme conditions. Typical applications are in the food, chemical and medical industries as well as in process engineering.

Common features, advantages and benefits of the EO Bite type system

- **Field assembly –** EO progressive ring fittings can be assembled anywhere with just a couple of wrenches. For stainless steel tube simple presetting tools are available. No additional equipment or machine is required.
- **Low cost assembly –** Using an EOMAT machine is the most economic method to preassemble EO rings onto tube ends. Whereas the actual preassembly process only takes some 1.4 seconds on the EOMAT, the total “floor-to-floor” time averages around 15 seconds.
- **3 series –** Very Light (LL), Light (L) and Heavy (S) series can be individually selected. For each application there is a solution for best flow rate, sufficient pressure resistance, smallest envelope size, low assembly force and minimum fitting cost.
- **Available sizes –** Most EO fittings are available in 25 sizes from 4 to 42 mm tube OD. Additional reducers allow optimum dimensioning of each individual fluid line. This saves space and material costs.
- **Tube wall –** EO fittings are suitable for use with light wall, medium wall, heavy wall, and extra heavy wall tubing. Light wall tube may require support sleeve (VH). Usage of VH, see chapter E.

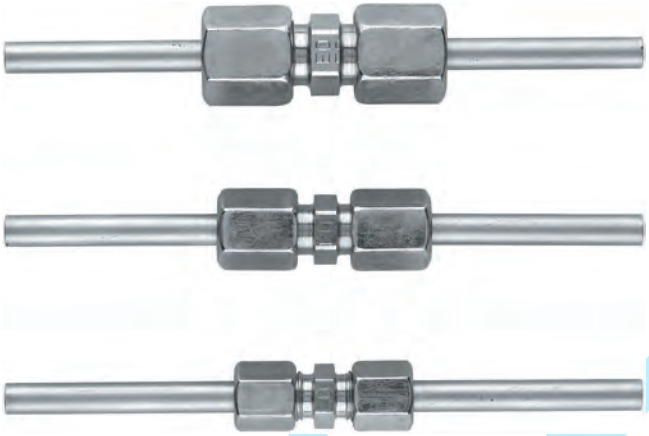

Top to bottom: EO Heavy (S), Light (L) and Very Light (LL) series: Best choice for each individual application (Illustration: Straight union 6 mm tube OD)

- **Tube material** – Even plastic tubes such as nylon, polyurethane, chlorinated polyvinyl chloride (PVC) or Polytetrafluoroethylene (PTFE) can be easily connected by using additional support sleeves E.
- **Visible bite –** The critical ring to tube front bite is clearly visible to tube fitters & inspectors. The presence of the recommended bite virtually eliminates any risk of catastrophic blow-off. This is a very important safety feature.
- **Reduced torque –** All nuts of EO-fittings are coated with a highly effective lubricant. Reduced assembly effort helps to prevent underassembly which is the most common reason for bite type fitting failure.
- **Sealing capability –** EO fittings have demonstrated a remarkable ability to remain leak free under various service conditions ranging from sealing high vacuum and small molecule gases to high pressure hydraulic fluids.
- **Distributed stresses –** Stresses due to flexural loading in service are distributed at several points in the joint, thus stress concentration in the bite is minimised.
- **Vibration control –** The rear bevel of the ring firmly grips tubing, thus dampening the effects of system vibration in the joint.
- **Envelope size –** EO fittings are comparatively small and compact, making them a suitable selection for tube connections in limited or tight spaces.
- **Temperature rating –** EO fittings are suitable for sub zero through elevated temperature applications. Service temperature rating is limited by the material chosen.

- **Compatibility –** Since EO fittings can be manufactured from a wide range of metals, compatibility factor with various fluids and atmospheric conditions is extensive.

- **Manufacture** – EO fittings are manufactured under tight quality controls which ensures that the product routinely satisfies or surpasses the requirements of the pertinent military and industrial standards. All manufacturing locations are ISO 9001 certified.

- **Silver plated nuts** – Stainless steel tube nuts are prelubricated with silver plated threads (size 15L – 42L, 12S – 38S). The threads of smaller sized stainless steel nuts are waxed. Thread galling is eliminated and assembly torque is reduced by as much as 40 percent. The EO-DUR treatment increases the speed and efficiency of stainless steel fitting assembly.

- **Tube length determination –** Exact tube length and bending can easily be checked by just trying out before assembly. This makes on-site piping very efficient.

- **Broad range of configurations –** EO fittings are available in more than 50 configurations. Especially for orientable fittings there is a wide variety of banjos, adjustable elbows or swivel combinations that allow an optimum solution for each application.

- **Functional fittings –** A variety of rotary fittings, non-return valves, Shut-off valves and test point connectors are available with the original EO-joint. This greatly reduces assembly time and cost of additional fittings and also eliminates possible leak paths.

- **True metric design –** EO fittings are designed to metric standards. All threads, hexagons, bores and other dimensions are purely metric.

- **No restrictions –** All bores of each fitting fit the inner diameter of the matching tube. LL, L and S-Series fittings are designed for best flow rate with thin, medium and heavy wall tube. Therefore, best performance without excessive noise or heat generation is always guaranteed.

- **World wide popularity –** The bite type fitting has worldwide acceptance. Most European, Asian, African and South American industry standards are purely metric. But also in Australia and Northern America DIN bite type fittings are gaining acceptance due to the metrification and end user specifications. Many machine operators prefer fittings that can be assembled without any additional equipment.

kovaz.cz

EO-2

Introduction

The common feature of all EO-2 fittings is elastomeric seals on all joints. These are also now available in FKM for applications with higher temperatures or aggressive media. This assures leak free operation without retightening – even under extreme working conditions. The easy handling, time and cost saving features, and many assembly advantages of the unique EO-2 functional nuts have made EO-2 fittings increasingly popular.

EO-2 is designed for metric tube and based on German Standards DIN 3861 and DIN 2353, which today are represented by the international standard ISO 8434-1. EO-2 is available in “LL”, “L”- and “S”-Series.

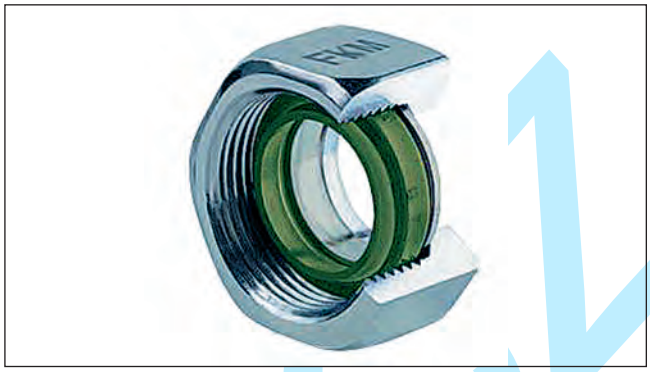

The Cr(VI) free EO-2 functional nut also with FKM sealing ring. Easy to handle and fast to assemble.

EO-2: Safe dry – clean – leakfree

Function of the EO-2 fitting system

Elastomeric sealing

The elastomeric seal assures a hermetically sealed tube joint. It is located between the inner cone of the fitting body and the tube surface, thus blocking the only possible leak path. Due to its large cross-section, the seal effectively compensates for all manufacturing tolerances on tube and fitting cone.

The sealing effect is pressure supported which makes the EO-2 fitting suitable for high pressure applications. The static compression also eliminates air-ingress into the fluid system at vacuum conditions.

Elastomerically sealed EO-2 fittings do not require any retightening even in heavy duty applications. Seal extrusion is prevented by proper housing without gaps or dead volume. The sealing lip is bonded to a metallic support ring.

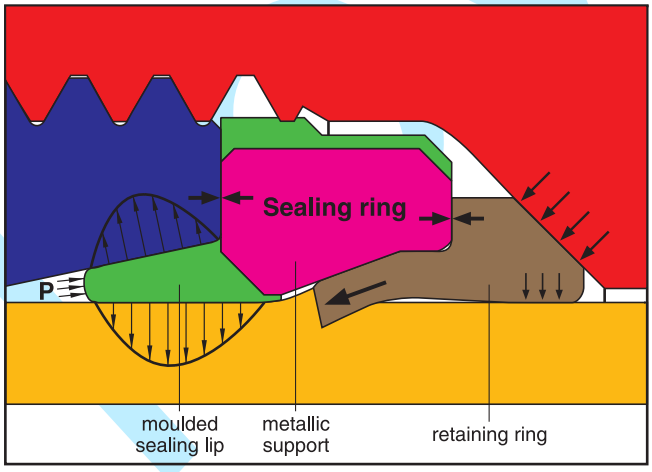

The metallic support of the sealing ring acts just like an integrated pre-assembly tool.

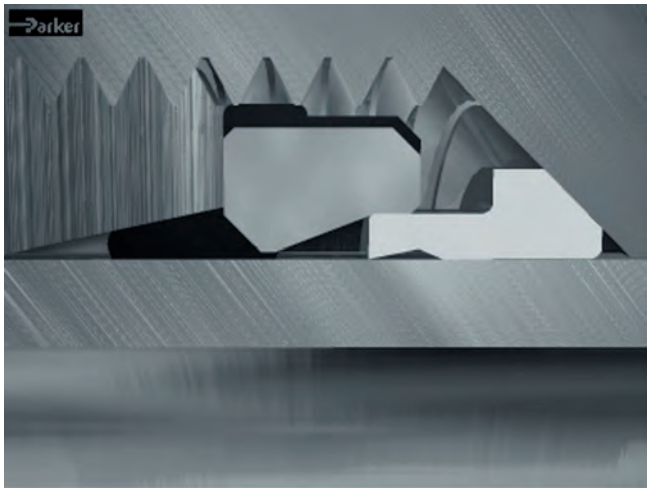

Before tightening the nut

Assembly “to block”

The retaining ring bites into the tube in accordance to the proven bite ring principle. The support ring reduces the danger of over- or underassembly by a special EO-2 design feature: Before assembly there is a gap in between the flat surfaces of the retaining ring and the metallic support ring of the seal. As soon as the retaining ring has reached the proper bite depth, the gap closes, resulting in a sharp increase of assembly torque. This results in uniform and reliable fitting assemblies. The assembly result can easily be inspected by just checking if the gap is closed.

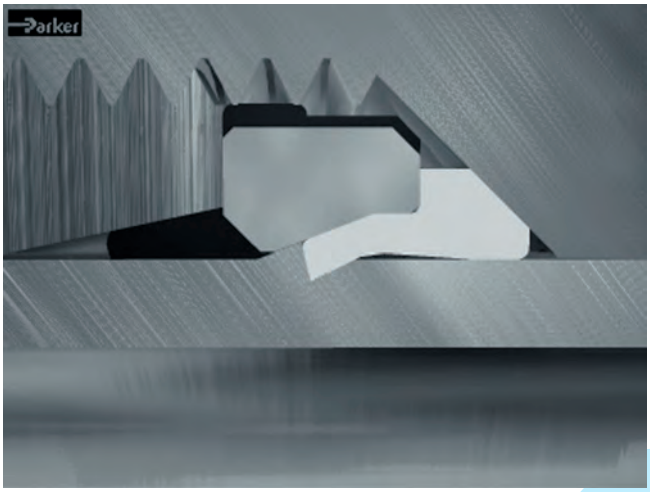

After tightening the nut

Closing the gap at the end of assembly provides a clear “Hit-Home-Feel”.

The separation of sealing and fixing function to two separate elements finally allows a more effective solution of the over- and untertightening problems of bite type fittings than increasing the number of cutting edges.

Integrated assembly tool

The metallic support ring of the seal is made of a special design, material and heat-treatment to act as a assembly tool. This makes sure that the retaining ring securely cuts into the tube surface without damaging the sensitive inner cone of the fitting body.

This unique feature of EO-2 fittings even allows direct assembly of stainless steel tube without any additional preassembly process. An EOMAT machine can be used to allow easy assembly of large dimension tube and drastically save total assembly time, effort and costs.

The integrated assembly tool of EO-2 fittings even helps to save further costs and trouble when using an EOMAT-type presetting machine:
As the presetting cone is only in contact with the elastomeric sealing lip, it cannot be worn out or damaged even after thousands of assemblies. This does not only save replacement costs but also avoids leakage problems caused by worn presetting tools.

The functional nut

The unique functional nut simplifies handling of fitting components and helps to minimise storage and procurement costs. The sealing and retaining rings are combined as a pair and are inserted into the internal thread of the nut in such a manner that they cannot fall out, so that these three parts form one functional element.

Individual components such as seals or retaining rings cannot be forgotten, confused or assembled in the wrong orientation. Time and cost is saved arranging the components to make up individual joints.

The functional nuts match all EO tube fitting joints. After assembly and disassembly, the sealing ring can be replaced individually without cutting off the tube end.

Common features, advantages and benefits of the EO-2 fitting system

- **High corrosion resistance** – The Cr(VI)-free surface treatment causes an average corrosion resistance of more than 500 hours to white rust.

- **Increased pressure** – Due to the application of even better materials combined with the special processing of individual components, EO-2 can be used in applications of up to 800 bar (S series) and 500 bar (L series). EO-2 considerably exceeds the DIN/ISO requirements and guarantees a 4-fold design factor. Thanks to the higher pressure levels, less expensive “L” series fittings can now be used instead of the heavier “S” series, which also is of benefit in limited or tight space applications.

- **EO-LUB** – Due to the special treatment of the larger sized nuts by the EO-LUB procedure (25S/28L and larger), the tightening torques of EO-2 fittings have been reduced by 25%. This makes assembly easier and prevents underassembly, the most common reason for tube fitting failure.

- **Cr(VI)-free** – Due to its Cr(VI)-free treated surface, Parker Ermeto now meets the requirements to be expected in the automotive industry and the expected requirements issued by the European Parliament to eliminate the use of materials and surfaces containing Cr(VI). The removal of Cr(VI) reflects Parker’s ongoing commitment to an environmentally clean and safe production process.

- **Worldwide availability** – EO-2 is available worldwide and meets the requirements of the applicable standards for 24° cutting ring fittings.

- **Sealing capability** – An elastomeric seal forms the primary sealing element, thus assuring leakfree sealing. Even low-viscosity media such as water or gas are hermetically sealed. Hydraulic systems therefore do not "sweat" at fittings.

- **Durability** – The elastomeric seal does not require any retightening even after years of operation under extreme working conditions.

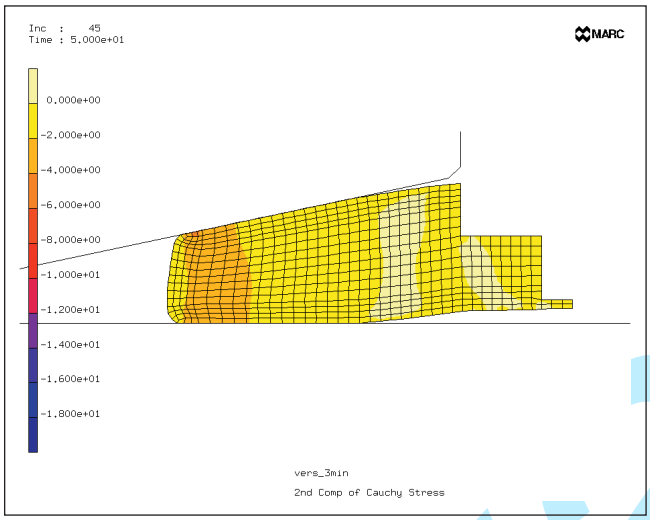

FEM (Finite Element Method) has been used to optimize the seal design (Picture: FES, Raiffeisenstr. 10a, D-74343 Sachsenheim).

- **Bite control** – The ideal bite depth is controlled by the fitting design rather than by the fitters force. Closing the gap at the end of manual assembly, the fitts gets a clear signal that setting is completed and the joint is ready for inspection.

- **Functional nut** – Individual components such as the retaining ring or seal cannot be lost, forgotten, confused or assembled in the wrong orientation. This dramatically saves assembly cost and helps to avoid dangerous assembly errors.

- **Assembly cost** – With less than 10 seconds cycle time on the EOMAT (actual presetting process: 1.4 seconds) the cost of presetting EO-2 is extremely low.

- **Integrated preassembly tool** – Each EO-2 functional nut comes assembled with an integrated assembly tool that makes sure that the retaining ring securely cuts into the tube surface without damaging the sensitive inner cone of the fitting body. This greatly reduces the danger of tube blow-off, even when using stainless steel tube.

- **Reliable repeatability** – When EOMAT machines are used for cost-efficient presetting, the preassembly tools do not wear out as they are only in contact with the rubber seal. This avoids leaks and dangerous blow-off which can result when traditional bite-type fittings are assembled using worn presetting tools.

- **Final assembly** – From the wrench-tight position of the preset EO-2 joint, one short pull on the wrench (approx. 1/6 to 1/4 turn) gives the assembly a quick high rise to required torque. EO-2 fittings have a solid "Hit-home-feel" and excellent over-torque resistance.

- **Visible inspection** – There is no doubt if an EO-2 functional nut has been preset correctly or not. Inspection is as simple as checking if the gap between retaining ring and sealing ring is completely closed. The tube end does not have to be disassembled out of the fitting for bite inspection.

- **No phantom leaks** – Lubrication is not mandatory for the assembly of steel EO-2 fittings. The machine operator will not be irritated about lubricant coming out of the fittings once the hydraulic system gets hot.

- **Reusability/Remakeability** – EO-2 fittings can be disassembled and reassembled many times. There is no wear or widening of the vulnerable inner cone. Damaged seals can easily be replaced. All spare DOZ-seals are marked by size-code (e.g.: 12–L).

- **On-Site-Maintenance** – For the maintenance and replacement of EO-2 fittings a set of wrenches is sufficient. Additional in – line – components, such as test points (GMA), ball valves (KH) or Tee-fittings can be added to an existing assembly within minutes.

- **Interchangeability** – The EO-2 functional nut can be used for the whole variety of the broad range of more than 50 configurations in some 25 sizes of standard EO LL, L and S-series fittings. Changeover from progressive ring or weld nipple is easy by the simple use of EO-2 functional nuts.

- **Reliability** – Millions of EO-2 fittings are working trouble free in applications like: Mobile Construction equipment, stationary machine tools, hydraulic presses, plastic injection moulding machines, shipbuilding, offshore exploration, submarines, railway trains and military equipment. Leakage does not occur on EO-2 pipework.

- **Trouble-free** – Regular bite type fittings allow typical assembly-errors such as: confusion of bite type ring material and size. Also, the use of worn-out preassembly tool may result in fitting failure. The clever EO-2 design does not allow most of these mistakes without making the assembly process more complicated.

- **Popularity** – EO-2 fittings are as easy to assemble as traditional bite type fittings, but they eliminate most of their typical assembly problems. EO-2 fittings are therefore appreciated by an increasing number of original equipment manufactures. EO-2 also has become the fitting of choice of end-users that appreciate the leak-free performance, the easy maintenance and the global availability of the metric soft-seal bite type system.

Suitable FM-type

	Steel tube	Stainless tube	Plastic tube
Steel fittings body (EO-2)	FM…CF	FM…SSA	FM…CF
Stainless steel fitting body (EO-2)	—	FM…71	FM…71

EO-2 fittings are used for heavy-duty applications, such as construction equipment or plastic injection molding.

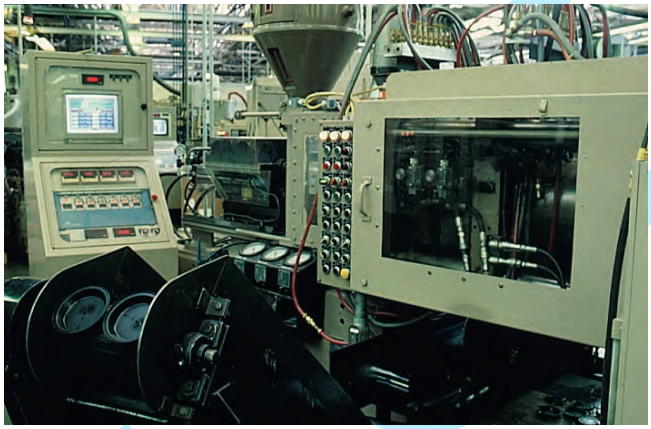

Every day millions of EO-2 fittings perform absolutely trouble-free.

kovaz.si

EO-3®

The innovative fitting system with visual assembly status recognition.

For tube and hose applications.

A New Fittings System
Just what the world of technology has been waiting for

As a connector component, any fitting is only as good as the effectiveness of the assembly process and therefore depends on how it has been assembled. In recent years, new geometries and material compositions have increasingly improved performance, reliability and ease of assembly. In this field Parker has constantly set new standards in the marketplace.

With the development of the EO-3® fitting, Parker now introduces another very important milestone in the history of connector technology. Our customers' practical experience provided the impetus for the development of the EO-3® system with the message that potential assembly errors, such as over- or under-tightening, should be eliminated. Practical experience often shows that fittings are in large part not expertly assembled. Changing personnel, inexperienced personnel, a shortage of skilled workers and increasingly difficult installation conditions lead to failed assemblies. The consequences are leakage, costly downtime and expensive reworking – or even accidents.

The advantages of the new fitting are clearly apparent with its greater simplicity, speed and safety. With its new thread technology, EO-3® can be assembled more easily and faster than other commercially available fittings systems and the assembly outcome of EO-3® is, for the first time ever, easily discernible from the outside; every user is now in a position to directly control work safety and machine reliability.
"Fit and forget" is a familiar slogan that was selected by Parker for its Ermeto connector systems. It is an expression which is still as valid as ever. Both the decades-long experience with fittings technology for high-pressure applications and also the intensive information exchange with users from a wide variety of industries, deliver the basic concept for the new EO-3® technology. Furthermore, the basic technical advantages of a variety of connector systems were analysed and brought together in the EO-3® system.

Users can secure a whole raft of money – saving advantages when they install EO-3® fittings:

- Leakage can be prevented with the help of unambiguous assembly inspection
- Distinctly increased machine performance and reliability
- EO-3® meets the increased safety and quality requirements now in force
- Additional costs of reworking are substantially avoided
- EO-3® increases the quality of the end-product
- Company image is enhanced due to better products
- No oil loss – an important contribution to environmental protection

These arguments support the immediate installation of EO-3® in a very wide range of operating conditions – whether energy, agriculture, paper machinery or oil and gas extraction; the EO-3® system will satisfy the highest requirements for quality and function. "Fit and forget" sums it all up.

A tradition of one innovation after another.

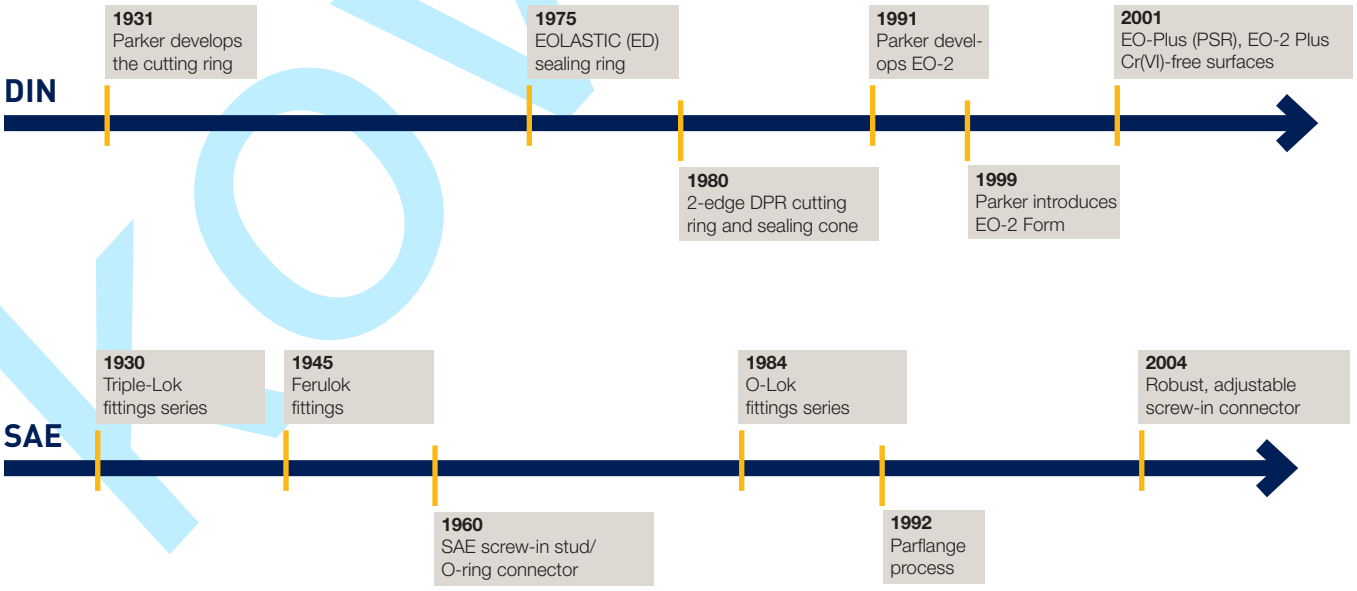

Clear to See Arguments

This is EO-3®

Indicator ring for unambiguous assembly outcomes

- Gives security to the assembler
- Leakage due to over- or under-tightening is prevented

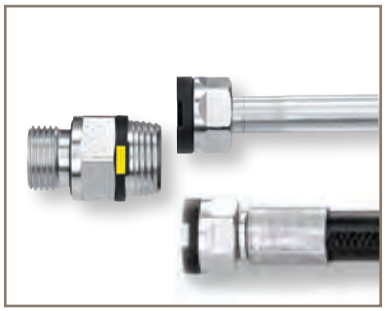

A connector for tubing and hose lines

- A reliable system for many applications

Safer, more rapid assembly due to lower expenditure of energy

- A taper thread as the new thread standard
- Reduction of assembly time

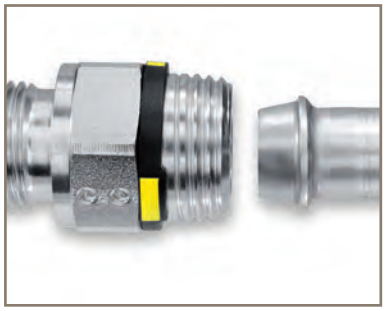

Optimum safety due to tearout-proof connector technology

- Machine tube forming with EO forming technology

Compact design

- Smaller nut spanner sizes in comparison with traditional standards
- Ideal in restricted access conditions

Sealing ring cannot be lost or damaged

- Soft seal integrated in the cone
- Elastomer seal with optimum sealing behaviour, even with high dynamics in the system
- Increased safety due to the fact that loss of, or damage to, the seal is prevented

No torque spanner or extension required

- Tool costs reduced, assembly accelerated

Easy access when installation space restricted

- Octagonal instead of standard hexagonal nut from tube size 25 mm and up

EO-3® – Technical Advantages
Worth significant cash savings

Customer benefits from installing Parker EO-3®

Further important components for the analysis of the total cost reduction are:

- Internal rework due to incorrect assembly
- External rework, e.g. guarantee claims

These instances are analysed and calculated together with the customer.

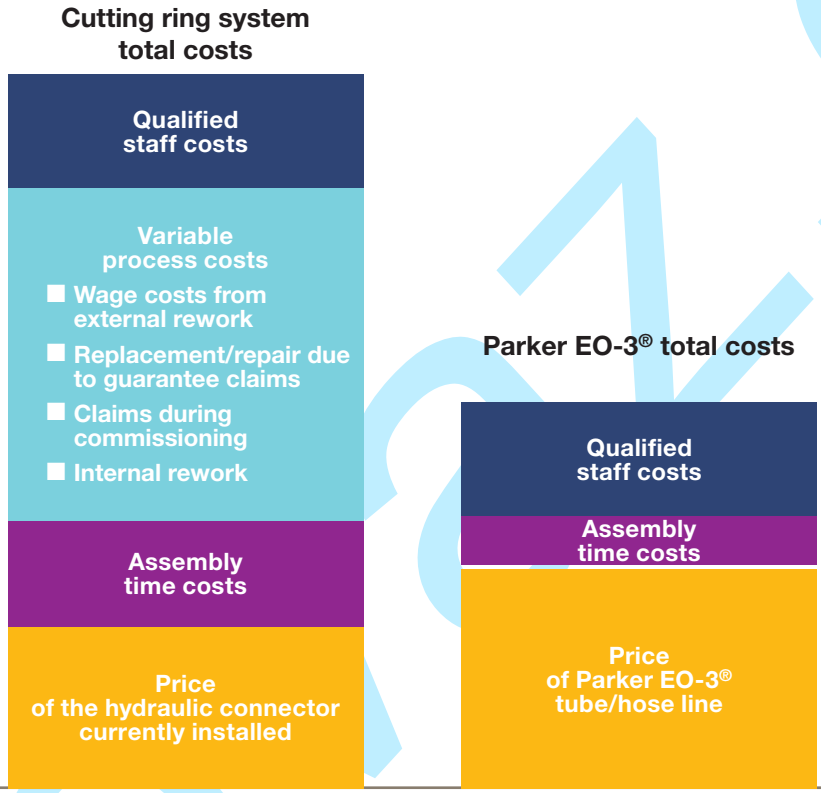

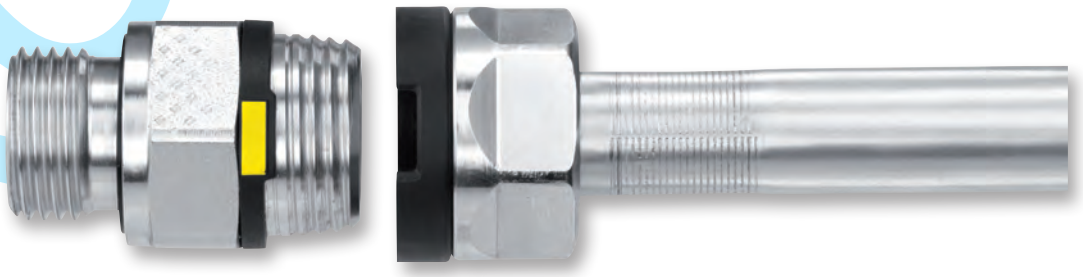

EO-3® – Weld-less Tube Lines

Energy-efficient forming technology for tubing connections

EO-3® connections are formed with the proven F3 WorkCenter. This machine is fully automatic and is designed for practical use in workshops. Thanks to its high-performance hydraulic drive and robust forming tools, this machine works very reliably.

At the front of the machine there is a tool magazine in which the tools can be easily viewed and kept clean. Additional tool racks are not required. Special additional tools facilitate machine set-up and tool change. Thanks to automatic tool recognition the user needs only to press the start button for the tube to be converted to the appropriate form in one single pass.

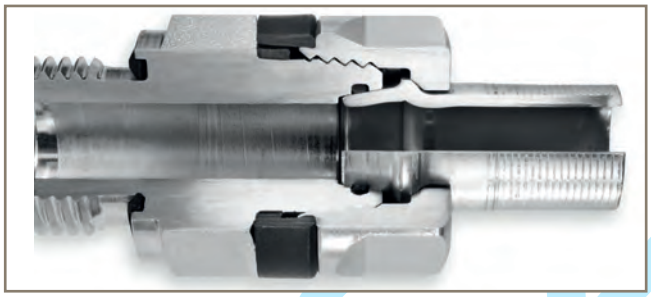

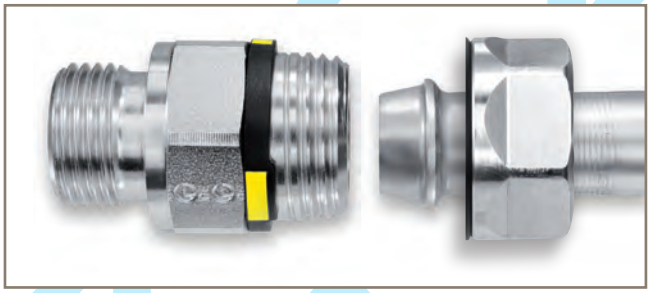

EO-3® – Assembly Status Recognition

Visible target leads to good management

"Do you have a consistent and mandatory procedure for assembly operations in your team?"

"How do you actually operate the assembly process – do you follow a manufacturer's recommendations?"

"How do you check whether the assembly operation has been correctly carried out?"

These are some of the typical questions we ask our customers during practical assembly training. The answers are many and varied – just like the assembly outcomes which we check when doing field work. In many companies assembly is by "good feeling". Sometimes it has a solid base of many years' experience but often depends on how things are on the day and on qualifications for the job. Making matters worse are awkward installation conditions due to poor access and lack of assembly space. Technical problem analysis frequently reveals the same old problem – assembly! Under- and over-tightening and even loose connections are typical assembly errors. It is even more exasperating when these problems are not discovered during final inspection and come to light only after delivery. Accurate error statistics are rarely available but the number of unreported cases here is very high.

These experiences guided us to develop with EO-3® a fitting system that easily and unambiguously shows assembly status that is visible all-round from the outside. This puts every user in the position where he can assemble with precision and establish the quality of connections very rapidly; finally, he also has the possibility of visual acceptance at the end of the assembly conveyor.

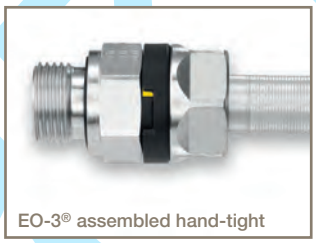

EO-3® assembled hand-tight

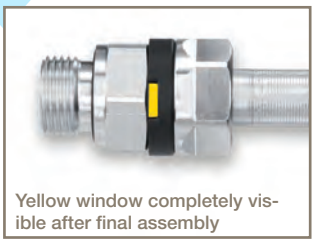

Yellow window completely visible after final assembly

Contours in the indicator rings for the drag ring function

During over-tightening the yellow window remains in place through the drag ring effect

EO-3® – repair and maintenance

Applicable and replaceable practically anywhere

EO-3® offers a reliable connection solution also in cases of repair or repeat assemblies,. The practical technician has only to simply tighten the EO-3® connector and check whether the viewing window is full. In these cases the yellow viewing window is also a clear signal for a professionally executed assembly process.

For repair purposes it can be necessary to resort to other fittings systems available in the DIN or SAE standard ranges. In such a case an EO-3® adaptor makes up the connection.

EO-3® – Technology Overview

Flexible in application

- EO-3® system – for tube connections and hose applications
- Tube sizes – all the common tube outside diameters from 06 mm to 42 mm with the commercially available tube wall thicknesses
- Series – EO-3® dispenses with standard series classification of LL, L and S
- Pressure rating – uniformly 420 bar for all tube sizes. Exceptions are typical L series such as 22, 28, 35, 42 at 250 bar. Qualification of pressure ratings corresponds to ISO 8434 requirements
- Tube connector thread standard – taper thread specially developed by Parker for EO-3®. Flank and taper dimensions are exactly matched to assembly performance (i.e. stroke and force) and also to the tear-out and shear resistance of a tube connector
- Fitting material – steel
- Tube material – conventional hydraulic steel tube material, e.g. E235 (ST37) or E355 (ST52.4) standard to DIN EN 10305-4
- Elastomer material – NBR
- Surface treatment – Parker chromium6-free corrosion protection
- Temperature resistance – -40 °C to +120 °C (analogous to NBR)
- Media compatibility – analogous to NBR material
- Energy efficiency – via matched bores with improved flow properties

Please see further details
in our CAT/4131-1/UK catalogue
www.parker.com/eo3

Kovaz.cz

EO-3® – Worth Knowing

Any questions? Here are the answers!

Is the viewing window always reliable, even when I over-tighten EO-3®?

Yes! If the viewing window is in the right position, both rings turn further in synchronisation due to the drag ring function. “Over-assembly” should not be confused here with “destroy”. It only means that more force than necessary was applied.

Can I over-assemble EO-3®?

See above. An “up to block position” provides a mechanical assembly stop. “Assemble till destroyed” is thereby virtually eliminated.

How does EO-3® behave during repeat assembly?

The repeat assembly process functions reliably. The indicator function remains in place, albeit the necessary effort and actual assembly stroke can differ, depending on the first assembly. Furthermore, there is no wear or widening of the internal cone.

Can I re-assemble a connector which has been over-tightened?

Yes, with over-assembly the indicator rings show the position of the last assembly. If the fitting is undone and then assembled again, the function of assembly indication remains intact.

Assembly is relatively easy – can EO-3® now also be loosened more quickly?

The loosening moments have a relationship with the assembly moments and are therefore lower. If the assembly is correct, loosening during operation cannot occur. This has been verified with dynamic testing of both tube and hose connections.

How does EO-3® behave when there are hose movements, especially torsion?

Hose assembly must be such that relative motion of machine components does not produce twisting.

Is the sealing ring in the fitting sufficiently protected from mechanical influences?

Yes, both are positive-locking systems. Differences exist in the form of the seal. With EO2-FORM the sealing ring is fitted onto the tube. With EO-3® an O-ring is already inserted into the fitting body.

Does EO-3® remain leak-proof even when the O-ring is damaged?

Yes, the O-ring is housed in the fitting body and is very well protected.

What are the temperature properties of the indicator ring?

The indicator rings are made from glass-reinforced polyamide. This material is suitable for temperatures from -40 °C up to +120 °C.

How media resistant are the indicator rings and the yellow viewing window?

The ozone-resistant indicator rings do not come into contact with the hydraulic medium due to the fact that they are situated on the outside of the fitting. But environmental media must be allowed for. The indicator rings are resistant to mineral oils and fats, water and popular detergents.

What can be done if the indicator ring in a manufactured hose or tube assembly is missing or destroyed?

The connector can be assembled without performance reductions like a sealing cone connector. The assembly indication function however is no longer operative.

kovaz.cz

Is EO-3® compatible with existing systems?	EO-3® can be connected to established DIN systems via an adaptor. In other respects EO-3® has its own technical standard.
Is the indicator ring ozone-resistant?	Yes, the indicator ring is manufactured from black, ozone-resistant polyamide. Adverse effect by ozone is not critical, because the indicator ring has no primary sealing function.
What do I do in the event of a repair if no EO-3® is available?	Either the whole tube/hose assembly including the screw-in connector should be exchanged or an EO-3® norm adaptor employed.
Do I still need a torque spanner for assembly?	No! This tool is no longer required. The fitting can be assembled by eye (or by sight).
Can I actually assemble faster?	Yes, because of the taper thread the nut can be screwed on with fewer turns.
How does EO-3® behave if the tube or hose line is not 100 % aligned?	EO-3® can better compensate for alignment errors than DIN fittings. Thanks to the taper thread, the hose or tube connector can also be assembled when small alignment errors are present.
Must I specially prepare the tube end?	Tube preparation is identical to that for DIN or SAE fittings. (See assembly instructions).
Has the port thread also changed?	No – the screw-in side follows the usual standards and norms.
How and how long should EO-3® be stored?	Storage capabilities: dry and dust-free. Exclusion of light and ozone because of the seal. Under optimum conditions NBR seals can be stored for 5 years and FKM for 10 years.
Which tubing can I use for EO-3®?	Steel tubing, seamlessly cold drawn and bright annealed to DIN EN ISO 10305-4.
Can stainless steel tubing be utilised?	EO-3® is for now only available in steel.
Can EO-3® be over-painted?	Yes, but assembly inspection should take place before painting because the colour markings of the indicator rings would also be over-painted.
Can painted EO-3® connectors be repeat assembled?	Yes, with painted EO-3® connectors the original assembly position can again be recognised. Assembly has been correctly carried out when the paint completely fills the viewing window and no other unpainted areas are visible.

kovaz.cz

EO2-FORM

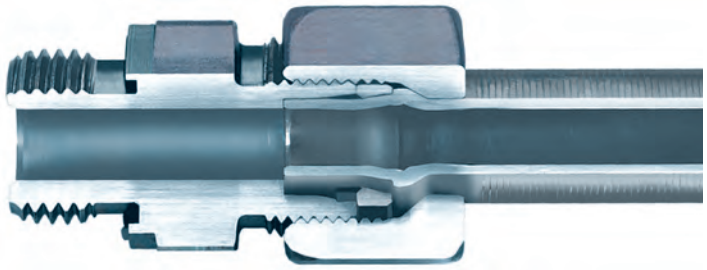

Introduction

EO2-FORM is the high pressure formed tube Generation of the High Pressure Connectors Europe division. As with EO-2, it is designed in to eliminate leakage in all fluid systems, by using elastomeric sealing systems.

The common feature of all EO2-FORM connections are the EO-2 seal elements as well as the new cold forming process, that gives extreme rigidity and low tightening torques. The seals are also available in FKM for applications with higher temperatures or aggressive media.

Through EO2-FORM, elastomeric sealing technology is made available even where bite-type connectors are not popular, like in hydraulic presses, cranes, lifts or ship canal locks. Compared to welding or brazing, the EO2-FORM process is faster and easier. It does not require special tube treatment, heating or chemicals.

EO2-FORM is designed for metric tube and fully interchangeable to the complete Ermeto Original product range according to ISO 8434-1/DIN 2353. EO2-FORM is available in “L”- and “S”-Series.

The EO2-FORM F3 machine

Function of EO2-FORM

EO-2/EO2-FORM system

EO2-FORM is not a stand-alone product. It has been developed as an extension of the proven EO-2 system product range. All EO2-FORM components like nuts, seals and fitting bodies come from the EO-2 program. The only investment needed is the forming machine, which pays off quickly as it reduces assembly time and effort. Assembly characteristics of EO2-FORM are similar to EO-2 too. This allows the customer to use both products for his hydraulic pipework without increasing stock or confusing workfloor engineers with new components.

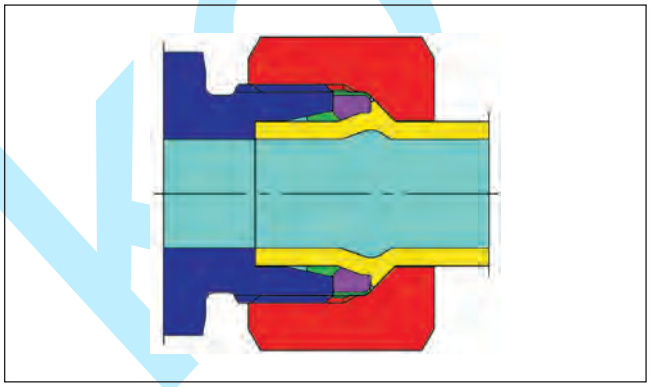

The EO2-FORM connection:
Extreme rigidity and low tightening torques

Elastomeric sealing

For EO2-FORM, the same sealing ring “DOZ” is used as for EO-2. The high volume elastomeric seal assures a hermetically sealed tube joint. It is located between the inner cone of the fitting body and the tube surface, thus blocking the only possible leak path. Due to its large cross

The EO2-FORM process

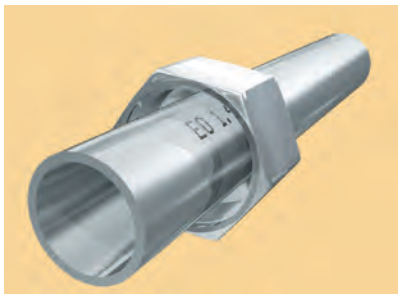

Tube end is prepared and equipped with EO nut

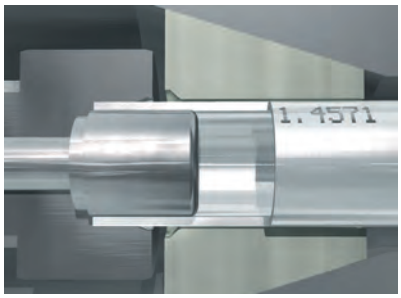

Tube is inserted into the tools until it firmly touches the stop at the end

After starting the process, the dies clamp the tube and the forming pin starts to move forward

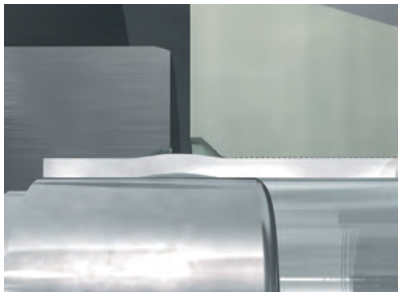
While moving, the pin is continuously forming the tube wall and compressing the material

The tool shape defines the outer contour of the formed tube wall

The inner contour also gets slightly deformed but remains smooth and unrestricted for good flow characteristics

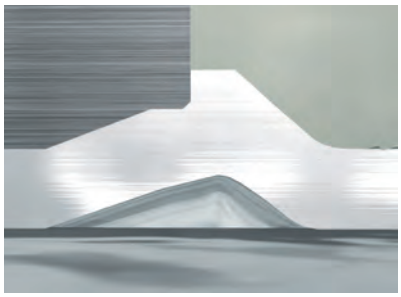
As soon as the moving pin touches the clamping jaws, the forming process is completed

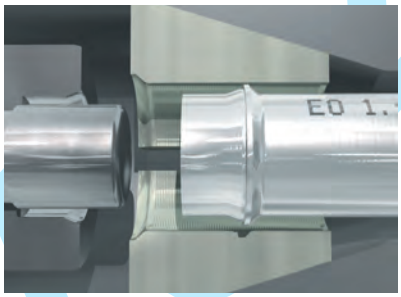

The tube end is released and ready for attaching the EO-2 seal

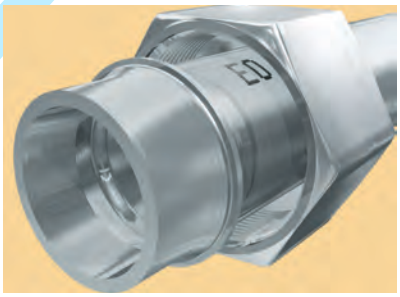

Installation is made in the fitting body

section, the seal effectively compensates for all manufacturing tolerances between the tube and fitting cone.

The sealing effect is pressure supported which makes the EO2-FORM fitting ideal for high pressure applications. The static compression also eliminates air-ingress into the fluid system in vacuum conditions.
Elastomerically sealed EO2-FORM fittings do not require any retightening even in heavy-duty applications. Seal extrusion is prevented by proper housing without gaps or dead volume areas. The sealing lip is bonded to a metallic support ring.

Cold-formed tube
The cold-forming of the tube is carried out by the EO2-FORM machine. Machine operation and tool setup are optimised for short cycle times, which makes the process easy and fast. The tube is connected when the sealing ring is fixed and the nut is tightened.

The working contact area of the EO2-FORM connection is the flat front surface of the metallic support ring which is made of heat-treated, high-strength steel. This provides superior mechanical strength without settling, loosening or need for re-tightening.

Features, advantages and benefits of the EO2-FORM fitting system

- **System solution** – No additional items need to be purchased or stocked on top of the existing EO-2 product range. Assembly characteristics of EO-2-FORM are similar to EO-2.

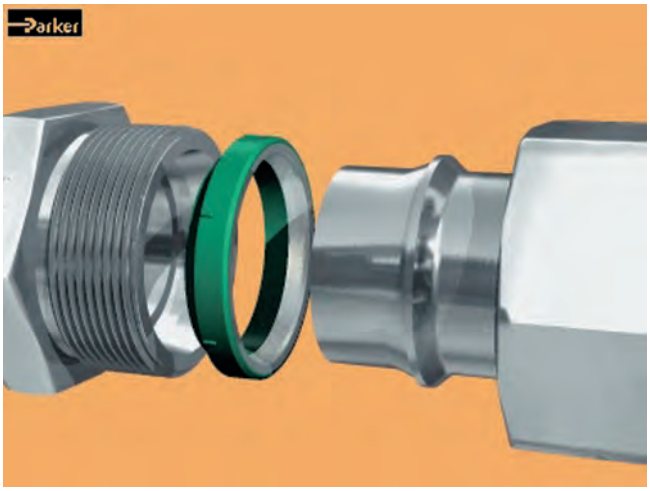

Before tightening the nut

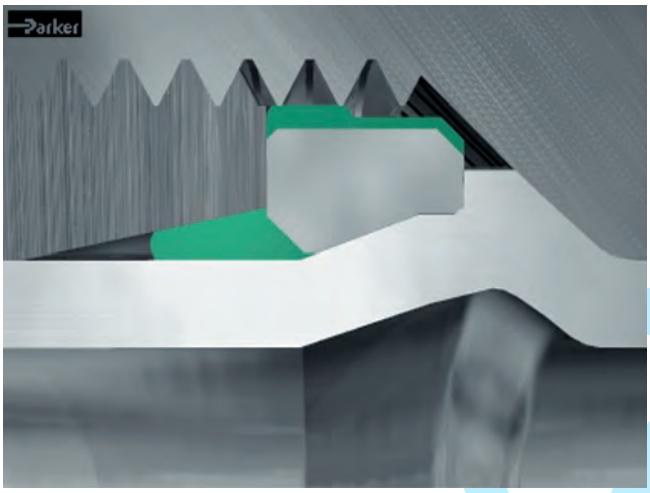

After tightening the nut

- **Flexible concept** – The product family of EO-2 and EO2-FORM allows the application of the optimum product within a complex hydraulic system or a whole manufacturing facility. EO2-FORM can be used for heavy duty applications like presses, EO-2 is ideal for general hydraulic and pneumatic pipework. This allows maximum total system performance with minimum component, assembly and stocking cost.
- **No risk** – EO2-FORM technology is based on the proven EO-2 technology. All components and the assembly technology are approved. The customer does not have to test a new system.
- **High pressure performance** – Due to the application of even better materials combined with the special processing of individual components, EO2-FORM can be used in applications of up to 800 bar (S series) and 500 bar (L series). EO2-FORM considerably exceeds the DIN/ISO requirements and guarantees a 4-fold design factor. Thanks to the higher pressure levels, less expensive “L” series fittings can now be used instead of the heavier “S” series, which also is a benefit in limited or tight space applications.
- **Sealing capability** – The high volume elastomeric seal forms the primary sealing element, thus assuring leak-free sealing. Even low-viscosity media such as water or gas are hermetically sealed. Hydraulic systems therefore do not “sweat” at the fitting joints.
- **No phantom leaks** – Lubrication is not mandatory for the assembly of steel EO weld nipples. The machine operator will not be irritated about lubricant coming out of the fittings once the hydraulic system gets hot.
- **Universal** – The EO2-FORM machine can cold-form all common steel tubes used in hydraulic systems (the EO2-FORM process also allows the use of stainless steel and exotic materials such as CuNiFe; please ask for separate catalogue). EO2-FORM tools cover metric tube from 6 to 42 mm OD. Thin wall tube of 1 mm wall thickness can be formed, too.
- **Vibration resistance** – The new EO2-FORM process achieves a smooth structural transformation of the tube wall allowing superior vibration resistance.
- **Durability** – The elastomeric seal does not require any re-tightening even after years of operation under extreme working conditions.
- **Efficient** – Compared to welding or brazing, EO2-FORM is much less time consuming. Special tube preparation and finishing are not necessary. Forming uses only a fraction of the energy needed for brazing or welding.
- **Quality** – Tube clamping and tooling are fully automated. Therefore, high and consistent quality is achieved without manual adjustment.
- **Noise reduction** – Compared to other forming methods, the EO2-FORM process results in a smooth inner contour of the tube that does not allow the accumulation of air, dirt or other sources of trouble. Less pressure drop, heat and noise is created.
- **Re-usability** – EO2-FORM connections can be disassembled and reassembled many times. There is no wear or widening of the vulnerable fitting inner cone.
- **Approved** – Both, EO-2 high pressure tube fittings and the EO2-FORM process are tested and approved by independent organisations such as Germanischer Lloyd and Det Norske Veritas (DNV).
- **Small bending radii** – The compact clamping device and special dies are suitable for forming short tube ends.
- **Clean** – The EO2-FORM process is environmentally clean and safe. As no heat is used, hazards from chemicals, fumes or heat do not occur.

EO weld nipple

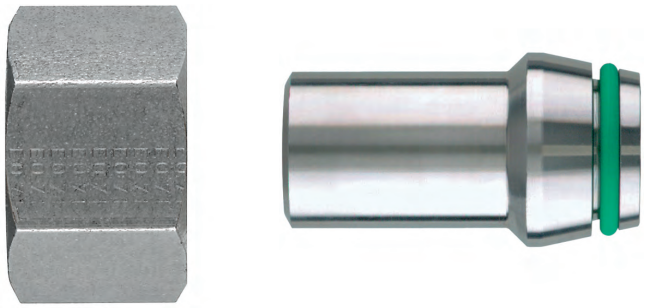

The leakfree performance of EO Weld nipples is assured by an o-ring seal.

Function of the EO weld nipple

The wide EO fitting range allows welded tube connections. Therefore, the EO weld nipple has to be welded onto the tube end.

Using the standard EO nut, this weld nipple can then be connected to the tube joint of any EO tube fitting.

EO weld nipples are available for L and S-series tubes of 6–38/42 mm diameter. A broad range of weld nipple fittings including reducers or elbows covers most applications.

The use of EO weld nipples allows remakeable pipe systems based on rigid weld connections.

Features, advantages and benefits of the EO weld nipple

EO weld nipples feature most advantages of the attractive EO fitting program. The specific benefits of the EO weld nipple program are:

- **Low quality tube** – Unlike bite-type or flared fittings, dimensional tolerances and rough tube surface are not very critical. Therefore weld nipples are suitable for countries where only poor quality tube is available.
- **Sealing capability** – An elastomeric seal forms the primary sealing element, thus assuring leakfree sealing. Even low-viscosity media such as water or gas are hermetically sealed. Hydraulic systems therefore do not “sweat” at fittings.

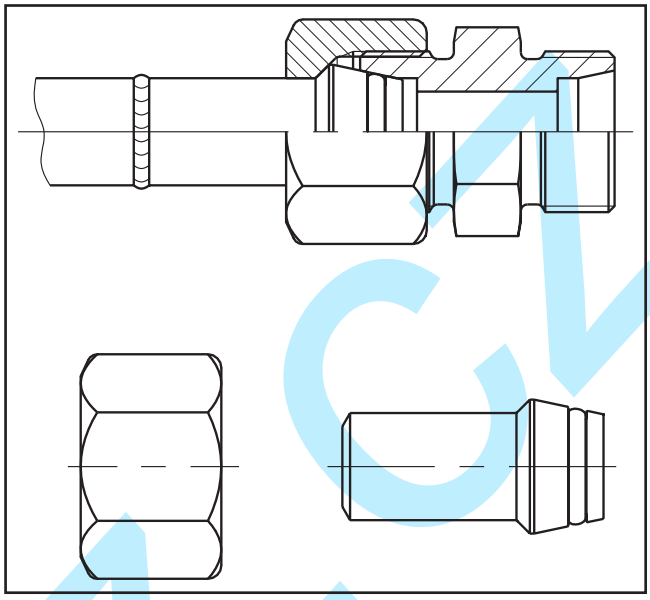

EO-Weld Nipples

- **Durability** – The O-ring seal is assembled with a high initial compression. It does not require any retightening even after years of operation under extreme working conditions.
- **Failure mode –** Unlike bite type fittings there is little danger of tube blow off if the fitting is not properly tightened. A loose joint shows excessive leakage before total failure.
- **Reusability/Remakeability** – EO weld nipples can be disassembled and reassembled many times. There is no wear or widening up of vulnerable inner fitting cone. Damaged O-rings can easily be replaced.
- **Smooth edge** – Under extreme working conditions, weld nipples are most likely to crack at the dimensional step just under the nut. In an additional rolling process this critical edge is smoothened for increased vibration strength.
- **Stress-free** – By welding, small deviations on tube cutting or bending can be compensated. Tension-free pipework is not likely to break even under extreme working conditions.
- **Welding process** – EO weld nipples are designed to be used for most popular welding processes.

Kovaz.cz

Introduction to O-Lok®

ace solutions™ advanced connection enhancements

The O-Lok® fitting was developed by Parker Tube Fittings Division in the USA in the early 1980's. This product has proven to be extremely effective in eliminating leaks at the higher pressures found in today's hydraulic systems.

The O-Lok® fitting is an O-ring face seal (O.R.F.S.) type fitting that consists of a nut, a body, an O-ring and a sleeve. Parker O-Lok® fittings come standard with a trapezoidal seal "Trap Seal". As shown in Fig. 1 the tube is flanged to 90° using the Parflange® system (or the tube may be brazed instead to a braze-type sleeve). When the fitting is assembled, it compresses an elastomeric seal in the precision-machined groove in the fitting body to form a leak-free connection.

Before tightening the nut

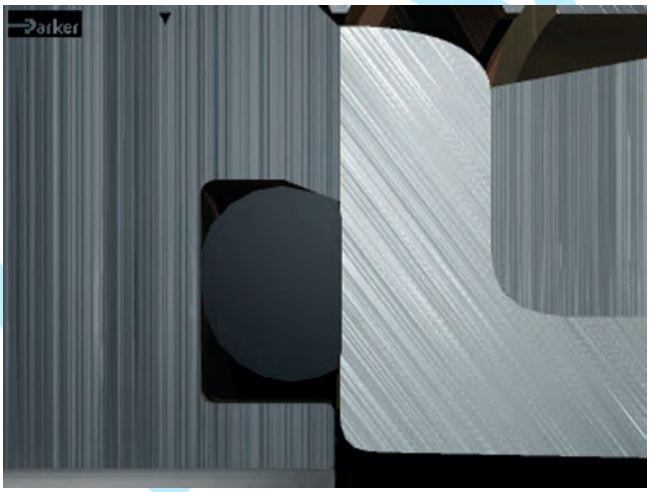

After tightening the nut
Standard O-Rings can be fitted instead of "Trap Seals"

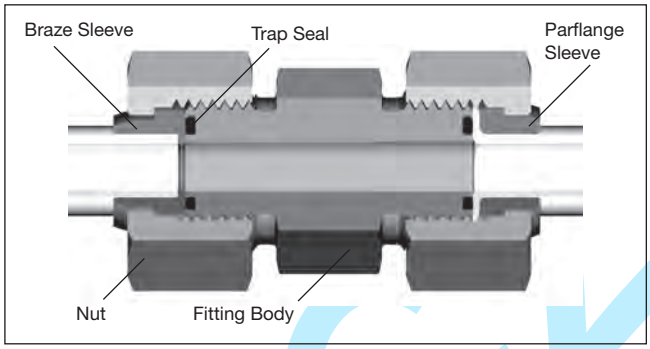

Fig. 1 – O-Lok® Union cutaway with brazed (LHS) and flanged assembly

O-Lok® fittings are suitable for a wide range of tube wall thickness and are also readily adaptable to inch or metric tubing and hose connections.

O-Lok® Progress

The last twenty years of experience supplying O-Lok® to the largest OEM customers have been well used in terms of listening to customer needs and refining design and material details to achieve the optimum mix of headline performance and a long trouble-free service life. After extensive product testing, it has been recognised that Parker O-Lok® fittings can be uprated to higher performance levels.

O-Lok®

The O-Lok® fitting system is characterised by the words.

'Durability' and 'leakfree performance'.

- **Pressure Plus** – Larger fitting sizes nominal pressure increased
  - 20 from 280 to 420 bar*
  - 24 from 280 to 350 bar*

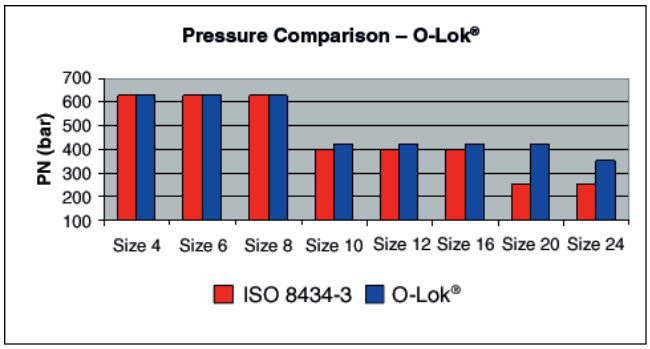

*For detailed pressure ratings see chapter C.

ace solutions™ advanced connection enhancements

- **Plating Plus** – 120 hours resistance to white rust corrosion exceeds the requirements of international standards.

- **Cleanliness Plus** – Contamination is the biggest source of early component failure in hydraulic systems. Parker O-Lok® fittings meet all requirements from the factory to the point of use – backed up by individual bagging.

- **CORG Plus** – All Parker O-Lok® fittings are manufactured with the Captive O-Ring Grooves (CORG) as standard. (This is an optional version in ISO 8434-3 and SAE J1453). See fig. 2.

- **Range Plus** – Parker offers the widest range of catalogue standard materials, seal combinations, styles and sizes in the industry. Only Parker has all this.

Introducing ACE Solutions

Advance Connector Enhancements are product features that take the fitting performance in the hands of customers beyond the standard we have come to expect. Driven by customer experiences and feedback from the field, ACE solutions are exactly that – simple engineering answers to real world problems.

Trap Seal

The Trap Seal in Parker O-Lok® fittings eliminates any possibility of the seal being rubbed out of position during the assembly process and hence cuts warranty costs and end customer dissatisfaction. Standard O-Rings can be dislodged without being noticed, leading to unexplained leaks after machines have been delivered to the end user. The simple patent pending engineered solution requires no changes in assembly method or order codes, and so is a seamless product upgrade unique to Parker. Existing standard O-Rings fit in the groove where necessary as field replacements.

Robust Adjustable Port Fittings

Robust Adjustable Port connections have been developed and tested to prevent leaks caused by incorrect assembly procedures. The joint geometry is re-designed to stop the backup washer being deformed / damaged if the fitting is over tightened when threaded into the port. The new robust locknut eliminates the possibilities of excessive tightening damage. It is available for all parallel thread types – UNF, Metric, BSPP. The simple design improvement leaves the assembly instructions unchanged. Patent pending.

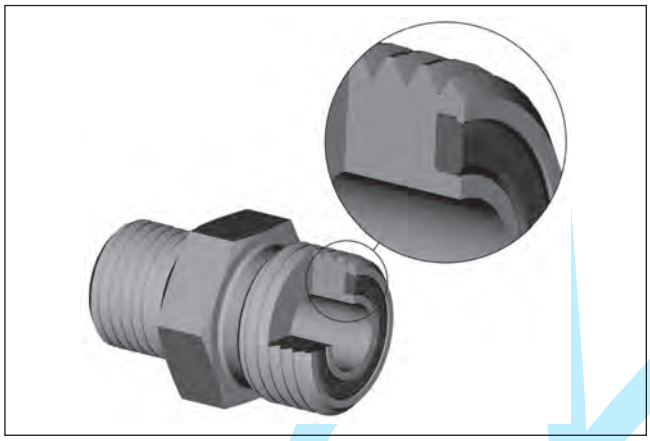

Fig 2 – Captive O-ring Groove (CORG) cutaway

Cr(VI)-free Surface finish

In accordance with European “end of vehicle life” directive 2000/53/EC which became law on 1st July 2007, all O-Lok® products have Cr(VI)-free surface protection. The new surface – introduced as a running change – gives a minimum of 120 hours to first white rust as measured according to ISO 9227 / ASTM B117 5% NaCl solution test standards.

Applications

The original development of the O-Lok® fitting was heavily influenced to meet the needs of international mobile equipment companies, mining, site clearance, agricultural and other heavy duty equipment. Today, the O-Lok® fitting is becoming an industry standard hydraulic fitting system for rugged duty equipment mounted on tracks or wheels. Equipment in these fields of application endure some of the highest levels of use, sometimes round the clock operation, in tough environments with extremes of temperature and mechanical stress. The simple, but effective design of the O-Lok® connection when used with the Parflange® tube preparation technology mean that long term ‘fit and forget’ performance is ensured, despite the physical conditions.

Simple, low torque assembly, no tube entry breakaway feature, 2″/50 mm max. tube size, and the ease of use with inch or metric tubing also make O-Lok® eminently suitable for general hydraulic applications in hydraulic presses, injection moulding equipment, shipbuilding, machine tools and a range of other areas. Anywhere in fact where a high quality leak-free tube or hose connection is needed.

aceSolutions™ advanced connection enhancements

Function of O-Lok® fittings

The O-Lok® fitting consists of four main components: a body, sleeve trapezoidal elastomeric seal and nut.

The O-Lok® fitting body

There are over 40 different body configurations to choose from for specific applications. The body face has a groove, which contains a high durometer seal that is held captive during installation. In addition, the O-Lok® fitting body shapes are all forged for added strength and longer service life.

Straight fittings are made from cold drawn barstock. The cold drawing process ensures consistent dimensional tolerances, improved strength and consistent surface finish.

CORG Groove

O-Lok® fittings are manufactured with a Captive seal Groove (CORG) design for prevention of seal fall out prior to final assembly. The international standards for ORFS fittings contain two versions of the seal groove. The original design had straight sides and under certain conditions of tolerance between the seal and the groove, it was possible for the seal to be dislodged. As a further refinement of the O-Lok® fitting, Parker introduced the CORG groove as standard production in all it's plants in 1998.

Elastomeric Sealing

From the design of the system, the Trap Seal compression gives excellent sealing characteristics from low pressure, low temperature circumstances found in winter during machine storage, to full pressure, high temperature cycles. Trap Seals are made from the same high quality NBR compound as the O-Rings superseded in 2006.

The O-Lok® fitting nut

Smaller size O-Lok® fitting nuts are cold-formed to provide a more tightly packed grain structure, resulting in a much stronger component. Larger size nuts are made of warm-forged steel-blanks.

The O-Lok® Parflange® sleeve

The preferred method of making an O-Lok® tube connection is by using the Parker Parflange® process to create the 90° flange on the tube end. A flange sleeve is used to support the flange and the tube, and provides the contact shoulder for the nut. After the Parflange® process, the sleeve is permanently fixed on the end of the tube reinforcing the joint.

The O-Lok® connection using the Parflange® method can be made with either metric or inch tubing by choosing the appropriate sleeves and tooling.

Parflange® sleeves from Parker are manufactured to exacting tolerances and geometry to work with the Parflange® machine and tooling, producing the robust, reinforced tube end connection. Failure to use the correct components can result in premature joint failure in the final application.

The O-Lok® braze sleeve

The braze sleeve provides the mating surface between the tube and the fitting body. Secondly, the braze sleeve, as the name implies, is attached to the tube through silver brazing. The braze provides holding power as well as a method to seal the joint. It also has a flat and smooth contact shoulder for the nut to connect the tube to the fitting body.

O-Lok® braze sleeves are manufactured to exacting dimensions. Tightly toleranced dimensions are required to prevent binding in the nut when torqued, to provide a flat and smooth sealing surface against the seal, and to give the appropriate clearance for silver brazing to the tube.

The O-Lok® connection can be made with either metric or inch tubing by choosing the appropriate braze sleeve.

The O-Lok® reducing braze sleeves

O-Lok® braze sleeves are manufactured in both even and reducing sizes. The reducing sleeves make it easy to adapt a larger face seal fitting to a smaller tube connection.

O-Lok® fitting function

The O-Lok® fitting body face contains a high durometer seal that is held captive in a precision machined groove. As the nut is tightened onto the fitting body, the seal is compressed between the body and flat face of the tube flange or braze sleeve to form a tight, positive seal.

As the two faces come in contact, further tightening of the nut produces a sharp rise in assembly torque. A solid pull of the wrench at this point, to the recommended assembly torque, completes the assembly.

The sharp torque rise gives a "solid feel" at assembly, and minimises the possibility of over tightening.

Because the sealing surfaces are flat and perpendicular to the assembly forces, they remain virtually free of distortion during assembly, giving O-Lok® fittings virtually unlimited remakeability. The seal should be inspected at each disassembly and replaced when necessary.

Kovaz.cz

Parflange® orbital flaring process

The Parflange® process
With the Parflange® process, the tube to sleeve attachment is achieved mechanically during an orbital cold forming process with a Parflange® machine. The process progressively flares then flanges the tube. The final dwell action in the cycle ensures that the seal surface produced is smooth and flat, and also eliminates springback effects in the material. This flange provides both the holding power and sealing surface (eliminating the braze joint, and hence, a potential leak path found with brazed sleeve attachment). The only sealing point is between the fitting body and the tube flange face via the high durometer elastomeric seal. Trap Seals are now fitted as standard to Parker O-Lok® fittings.

The flanging process is very fast and requires very little cleaning prior to or after flanging. Thus, the process enhances the integrity of the joint and reduces cost.

Parflange® 1025

The Parflange® process utilises an orbital cold flow forming process to produce a flat, smooth, rigidly supported 90° sealing surface on the tube end. The process progressively flares then flanges the tube.

The Parflange® process conforms to the requirements for mechanical tube forming shown in the SAE J1453 standard, and has been specified after extensive testing by the majority of the large mobile equipment manufacturers.

Upgraded Parflange® 50 – Easier to use, reliable machine

Flanging with Parflange® eliminates the need for welding or brazing of the sleeve to the tube end.

Parflange® 50 series production machine
The 50 generation of the hugely successful Parflange® machine incorporates all the feedback and suggestions from professional tube manipulation users across the world. Ergonomics, controls and electronics and maintenance aspects are all improved, but the heart of the process – the Parflange® orbital forming head remains unchanged. Similarly existing tooling can be used with the new machine, making a 50 upgrade from the 1040 generation a seamless experience. For full details please see chapter H.

Parflange® advantages over brazing or welding

- **Flexibility** – Fast tool changes and easy set-up make small batches economical to reduce WIP (work in progress) and inventory costs.

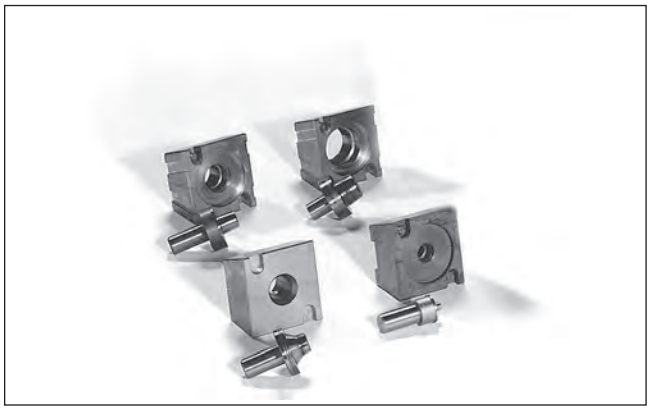

Parflange® tools

- **Faster** – 9 to 12 times the speed of comparable induction brazing.
- **Simple tube preparation** – The Parflange® process does not require any special pre- or post-flange cleaning of the tube and sleeve. The process is simple and the machine requires straightforward training only to operate.
- **Safety** – Unlike brazing, the Parflange® process does not require any flux, braze alloy, post braze cleaner or rust inhibitor. An environmentally safe lubricant applied to the flanging pin is the only additive associated with the Parflange®.

The Parflange® process

For O-Lok®, the sleeve is placed into clamping dies first

Tube is inserted into the tools until it firmly touches the stop at the end

After starting the process, the dies clamp the tube and the flanging pin starts the orbital movement and the forward stroke

While moving, the front pin expands the tube wall from the inside

As soon as the flat working surface of the pin contacts the tube end, the flanging process begins

The front surface is continuously rolled and compressed. From the inside, the tube surface is slightly expanded to clamp the sleeve

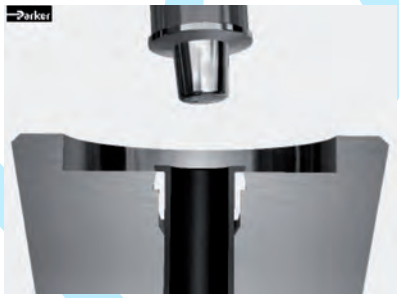

As soon as the defined flange contour is achieved, the orbital movement stops and the pin withdraws

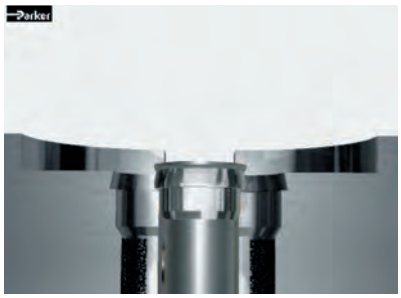

The tube end is released and can be taken out of the machine

The connection is ready for assembly

- **Environment** – The Parflange® process is environmentally clean and safe. It does not require open flame or any form of heating. Additionally, there is no emission of hazardous fumes, as is typical with welding and brazing.

- **Energy** – The Parflange® process uses only a fraction of the energy needed for welding or brazing.

- **Corrosion resistance** – The Parflange® process accommodates the use of plated or unplated components (i.e. tube and sleeve). Thus, the high costs of electroplating assemblies after fabrication is eliminated by using pre-plated tube.

- **Excellent surface quality** – The Parflange® process eliminates the potential leak path present at the braze or weld joint.
  The Parflange® process produces a burnished sealing surface, typically much smoother than the 3.1 µm/125 micro-inch Ra surface smoothness requirement of SAE J1453.

Users of Parflange® and Parker's O-Lok® fittings enjoy all the inherent sealing, reliability, time and cost saving benefits, without the many drawbacks which accompany welding or brazing.

Therefore, Parker strongly recommends the Parflange® process for the assembly of Triple-Lok® and O-Lok® connections. Parflange® machines range from desktop 1025 for flexible workshop use to Parflange® 50 for economic industrial production.

Features, advantages and benefits of the Parflange® process for Triple-Lok®, O-Lok®

- **Superior sealing performance** – The Parflange® process achieves a sealing surface of unique surface quality and mechanical strength.

- **Superior vibration resistance** – Unlike conventional flaring, the Parflange® process results in a rigid connection of the O-Lok® sleeve on the tube-end. Parflange®/O-Lok® connections perform much better under reversed bending stress conditions.

- **Easy to use** – No programming or adjustments necessary. High quality results are consistently achieved without manual adjustment.

- **Cost saving** – Compared to brazing or welding, orbital flanging is much less time consuming. Special tube preparation and finishing are not necessary. Flanging uses only a fraction of the energy needed for brazing or welding. In summary the Parflange® process can reduce costs for volume manufacture by more than half.

- **Clean** – The Parflange® process is environmental clean and safe. As no heat or chemicals are used, hazards from fumes or heat do not occur.

- **Zinc plated tubing** – The Parflange® process allows the use of zinc-plated tubing. The cost for cleaning, post process plating or painting can be saved.

- **Process/Product concept** – Parflange® machines are specially designed to match Parker O-Lok® and Triple-Lok® standards. Machine, tools and products are fine-tuned for reliable performance.

- **Proven technology** – For more than 14 years, hundreds of Parflange® machines have operated worldwide under heavy duty workshop conditions.

Kovaz.cz

Introduction to Triple-Lok®

aceSolutions™ advanced connection enhancements

The concept of flaring tube to provide a seal and holding power to the connection is very old. It's origin goes back to the early days of the automobile. Different types of flared connections including 45° single and double flares, inverted flare, 30° flare, etc., were developed for coolant, fuel, brake and lube systems of the early automobile.

Pioneered by Parker Hannifin, the Triple-Lok® 37° flared fitting evolved as a higher pressure version of the above connections. Its initial use was in the developing hydraulic systems of agricultural and earth moving machinery, automotive transfer lines and other machine tools.

As exports of machinery increased after World War II, the Triple-Lok® Plus fitting gained worldwide use and acceptance. Today it is the most widely used fitting in the world.

Before tightening the nut

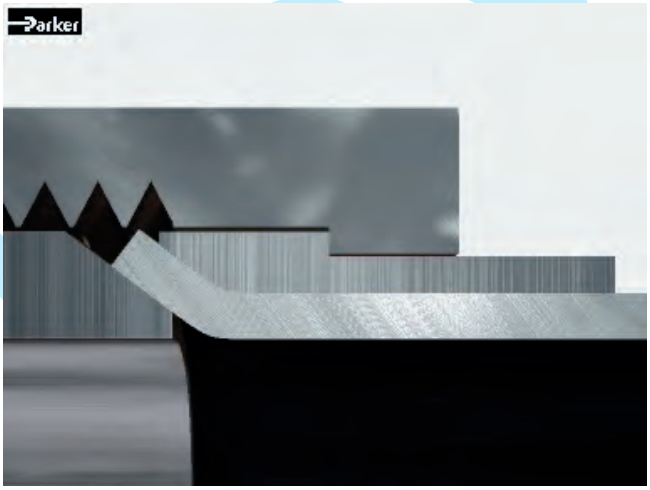

After tightening the nut

It enjoys conformance approvals by a range of national and international technical and certifying organisations.

Its appeal is in its simplicity, compact design, ease of assembly, reliability (single sealing point), wide availability and acceptance. It is especially suited for low and medium wall thickness tubing. Today the Triple-Lok® generation capabilities range from 500 bar for smaller sizes to 140 bar for largest – 2″ size. Currently it is used in virtually every application that uses fluid power for motion control.

Triple-Lok® Progress

Parker have supplied more Triple-Lok® fittings than any other manufacturer over the last seventy years. Parker engineers take a leading position in advising both customers and the international standards committees concerning 37° flare fittings. This experience, combined with optimised manufacturing methods and materials have resulted in steady product performance improvements verified by extensive testing in the laboratory. A combination of simple burst tests (with a 4× design factor), impulse and vibration tests have shown Parker Triple-Lok® fittings can be uprated to higher performance levels in the smaller and in the larger sized parts. Additionally, the corrosion protection level has been improved by 100% due to effective process control.

Triple-Lok®

The Triple-Lok® fitting can be characterised by the phrase "reliable product performance".

- **Pressure Plus** – Following fitting sizes nominal pressure increased
  Size 4: 350 ISO 8434-2 (bar) 500 Triple-Lok® (bar)
  Size 5: 350 ISO 8434-2 (bar) 420 Triple-Lok® (bar)
  Size 6: 350 ISO 8434-2 (bar) 420 Triple-Lok® (bar)
  Size 8: 350 ISO 8434-2 (bar) 420 Triple-Lok® (bar)
  Size 20: 210 ISO 8434-2 (bar) 280 Triple-Lok® (bar)
  Size 24: 140 ISO 8434-2 (bar) 210 Triple-Lok® (bar)
  Size 32: 105 ISO 8434-2 (bar) 140 Triple-Lok® (bar)

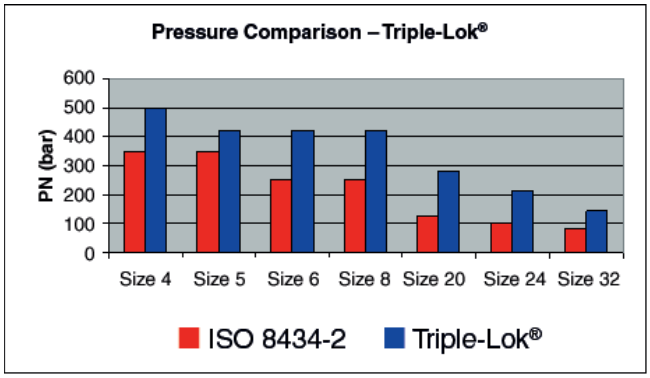

Fig. C1 – Assembled Triple-Lok® fitting cutaway and Triple-Lok® fitting components (fitting body with O-ring, sleeve and nut).

Fig. C2

- **Plating Plus** – 120 hours resistance to white rust corrosion exceeds the requirements of international standards.
- **Cleanliness Plus** – Contamination is the biggest source of early component failure in hydraulic systems. Parker Triple-Lok® fittings meet all requirements from the factory to the point of use – backed up by individual bagging.
- **Range Plus** – Parker offers the widest range of catalogue standard materials, seal combinations, styles and sizes in the industry. Only Parker has all this.

This all adds up to an unbeatable combination of performance and customer-friendly features.

Introducing ACE Solutions

Advance Connector Enhancements are product features that take the fitting performance in the hands of customers beyond the standard we have come to expect. Driven by customer experiences and feedback from the field, ACE solutions are exactly that – simple engineering answers to real world problems.

- **Robust Adjustable Port Fittings**

Robust Adjustable Port connections have been developed and tested to prevent leaks caused by incorrect assembly procedures. The joint geometry is re-designed to stop the backup washer being deformed / damaged if the fitting is over tightened when threaded into the port. The new robust locknut eliminates the possibilities of excessive tightening damage. It is available for all parallel thread types – UNF, Metric, BSPP. The simple design improvement leaves the assembly instructions unchanged.

- **Cr(VI)-free Surface finish**

In accordance with European “end of vehicle life” directive 2000/53/EC which became law on 1st July 2007, all Triple-Lok® products have Cr(VI)-free surface protection. The new surface – introduced as a running change – gives a minimum of 120 hours to first white rust as measured according to ISO 9227 / ASTM B117 5% NaCl solution test standards.

- **Dual Angle Swivel Connections**

In another ‘first’ for Parker, all swivel female cone connections will be switched to the unique dual angle design. This will make the connections even more effective by increasing the reliability in dynamic pressure conditions, making the contact point between the cones more stable, and easier to make a tight connection when the sealing cone gets damaged. Further, the pressure rating for some of the connections will be increased, without the need for heavier or higher strength materials. Another elegant engineering upgrade from Parker. There are no changes to the assembly procedures or part numbers. Customers need do nothing to start to receive a superior product.

Applications

Because of its long history and the heavy influence of American industry worldwide, Triple-Lok® fittings designed to the original American SAE standard are found in almost every branch of hydraulics, from garbage trucks to shipbuilding. They are particularly prevalent in those branches of mobile hydraulics where medium pressure systems are used. The Triple-Lok® fitting system is especially applicable where high volumes of tubes are prepared, and efficient tube flaring equipment can be employed. Still field repairs can be made with hand tools where needed.

Function of Triple-Lok® fittings

The Triple-Lok® fitting design is very simple. It uses an easily produced flare at the tube end to seal and hold fluid under high pressure. The fitting consists of three pieces: the body, sleeve and nut. The tube end is flared to a 37°

angle and held between the fitting nose (seat) and the sleeve (support) with the nut as shown in Fig. C1, providing a very effective single seal point between the fitting nose and the tube flare.
The support sleeve serves several important functions:

- It provides a clamping surface against the rear of the tube flare and a bearing shoulder for the nut. This minimises tube twisting during assembly.
- It provides support to the tube flare. The tapered fitting nose tends to wedge open the flare during assembly. The sleeve helps to resist this expansion, allowing the fitting to be tightened adequately.
- It makes the fitting adaptable to both metric and inch O.D. tubing merely by changing the sleeve. This feature has made Triple-Lok® fittings accepted worldwide.

The Triple-Lok® design is also very efficient. It has the smallest seal area of all fitting designs. The seal area is only slightly larger than the fluid flow area. The small seal area results in compactness and low assembly torque compared to the holding power of the joint.

The design was standardised initially as a J.I.C. (Joint Industrial Council) design and was later adopted by the S.A.E. (Society of Automotive Engineers) and I.S.O. (International Organisation for Standardisation) to assure complete dimensional interchangeability between various manufacturers.

Even though many manufacturers conform to the same dimensional standard, there are significant differences in actual performance of the fittings because of a variety of methods of manufacture and quality standards used.

Triple-Lok® fitting components are produced using the best methods of manufacture and state of the art equipment to assure construction integrity, high strength, long service life and high quality.

The Triple-Lok® body – Straight bodies are made from either cold drawn bar stock, or cold-formed construction. All shapes are of one-piece forged construction eliminating potential leak paths of multiple component constructions such as brazed shapes. The Triple-Lok® steel forged shapes also feature higher hardness for high pressure capability and minimising nose collapse (typical of sizes –10 and under) during repeated assembly. This compares very favourably to parts of brazed construction, which typically exhibit lower hardness and hence much more nose deformation.

The Triple-Lok® sleeve – Triple-Lok® fitting support sleeves are cold-formed and heat treated for an optimum combination of strength and ductility. Cold forming also eliminates the problems of laps, folds, stringers, etc., associated with sleeves machined from bar stock.

The Triple-Lok® nut – Nuts for all but the three largest sizes (–20, –24 and –32) are cold formed. Cold forming increases material strength and its fatigue properties, imparting high strength and longer service life to the nuts.

Larger nuts which are less severely stressed, are hot forged.

Triple-Lok® fittings sealing function

As seen in Fig. C2, tightening of the nut clamps the tube flare against the body nose, producing a leak tight joint. This clamping onto the 37° cone provides a measure of elasticity to the joint helping it to resist loosening under vibration. The clamping force results in a radial load (F_R) that tends to deform the fitting nose inwards. The resistance of the nose to elastic deformation provides a constant pre-load (similar to a spring washer) keeping it tight.

The clamping force provided by the nut resists the opposing force of the fluid under pressure. The joint remains leak tight as long as the clamping force is higher than the opposing pressure load. Properly assembled Triple-Lok® fittings with appropriate tube will seal consistently under pressure until the tube bursts.

Sealing in Triple-Lok® fittings takes place between two smooth metal surfaces, the fitting nose and inside of the tube flare. Therefore, the sealing surfaces have to be round and smooth, free of any, scratches, dents, spiral tool marks, splits or weld beads, in the seal area.

Seamless or welded and redrawn fully annealed tubing is recommended for Triple-Lok® fittings for ease of flaring and tube bending.

Features, advantages and benefits

- **Pressure** – Triple-Lok® fittings are rated up to 500 bar nominal pressure with 4× design factor. Triple-Lok® can be used in more applications.
- **Robust Adjustable Port connections** – Eliminates potential assembly errors associated with over tightening of the elbow or tee bodies into ports. Reduces warranty claims from unseen assembly faults.
- **Cr(VI)-free surface** – Triple-Lok® fittings conform to the requirements of the European directive 2000/53/EC.
- **Corrosion resistance** – Triple-Lok® fittings achieve a minimum of 120 hours to first white rust, exceeding industry standards.
- **Dual Anlge Swivel** – improved reliability in dynamic pressure conditions and increased pressure ratings for the swivel connection.

- **Safety** – The flared tube provides a solid and visible stop for the nut. The tube flare means there is no risk of tear out of the tube, thus giving the Triple-Lok® system a reputation for safety.

- **Single seal point** – Triple-Lok® fittings have only one seal (between the fitting nose and flare I.D.). This makes a highly reliable joint that is easily maintained.

- **Easy to assemble** – Small seal area under pressure makes for high-pressure capability at relatively low torque levels. This allows the use of small wrenches for easy installation and maintenance.

- **Wide temperature and media compatibility** – Metal to metal seal allows a range of uses and many applications.

- **Tube materials** – Triple-Lok® fittings can be used with most tube materials, such as high and low-grade steel or stainless steel, copper and aluminium.

- **No minimum tube wall limitation** – Triple-Lok® fittings are suitable for very thin to medium wall tubing. The optimum wall thickness tubing can be used, reducing overall system cost.

- **Ease of installation and maintenance** – Short tube entry means that installation is simplified and minimum tube prying is necessary when maintenance is required on the system. It is easy and quick.

- **Adaptability to metric & inch tubing** – Triple-Lok® fitting sleeves make the system suitable for inch and metric tubing by merely changing the sleeve.

- **Adaptability to hose assembly** – Triple-Lok® fittings allow for direct connection to 37° flare hose assemblies, the most popular industrial hose connection worldwide.

- **Forged shapes** – Triple-Lok® fittings have no braze joints to leak. Forgings provide higher dependability and longer life compared to multiple component brazed constructions.

- **Hard forgings** – High hardness of Triple-Lok® fittings forged shapes minimises the deformation of the 37° nose during assembly, maintaining full flow area and good reuseability.

- **Cold formed sleeves and nuts** – Sleeves and nuts in popular sizes are cold formed for high strength and toughness through optimum grain flow. This imparts high dependability and long service life.

- **International standard design** – Triple-Lok® fittings offer worldwide availability and interchangeability, they conform to SAE and ISO standards. 37° fittings are the most widely used fitting type in the world.

- **Availability** – Triple-Lok® fittings offer the broadest range of sizes and configurations of any fitting. This provides users with the optimum choice of tube fitting options. Standard materials offered are steel, stainless steel and brass.

Kovaci

Adapters – introduction

In addition to the tube fittings described earlier, there are needs for other adapters to complete hydraulic circuits which perform different functions:

- **Thread size adapters** – to reduce or expand the existing thread
- **Thread conversion adapters** – to change from one port thread to another to allow tube fitting or hose connections
- **Hose end adapters** – hose to port, hose to hose etc.
- Blanking plugs.

The range of Tube Fittings products, when used without the tube nut and ring/sleeve, can also be used as hose adapters to allow the corresponding hose assembly to connect to a port.

Adapters are frequently used in maintenance situations, where equipment is used outside the region in which it was manufactured. For example to convert BSPP threads from a European manufacturer to an American thread alternative – UNF or NPT. Adapters are therefore often the most economical way to solve short-term problems.

There are many types of threads used in the Fluid Power industry throughout the world. This section contains adapters with a wide range of those thread types including: NPT, NPTF, NPSM, BSPT, BSPP, SAE, UN/UNF, and Metric. All threads in this section are made to industry specifications with conformance shown in Table F1.

Thread	Standard
NPT	ANSI B1.21.1, FED-STD-H28/7
NPTF	SAE J476, ANSI B1.20.3, FED-STD-H28/8
NPSM	ANSI B1.20.1, FED-STD-28/7
BSPT	BS 21, ISO 7/1
BSPP	BS 2779, ISO 228/1
Metric	ISO 261, ANSI B1.13M,FED-STD-H28/21
UN/UNF*	ANSI B1.1, FED-STD-H28/2

Table F1 – Thread conformance standards

Adapters from Parker Hannifin are manufactured from drawn barstock for straight parts, or from forgings in the case of elbows, tees and crosses, to give higher durability and long term performance. Pressure ratings are based on the same requirements used for the tube fittings product ranges. Parts are corrosion protected also to the same high standard found in other High Pressure Connectors Division products.

Adapters – function

NPT/NPTF adapters

Commonly known as pipe thread adapters in USA, NPT and NPTF (Dryseal) adapters have tapered threads. These threads feature a 60° flank angle and 1°47′ taper, as shown in Fig. F1. Because of the taper, they are commonly used in the USA as adjustable fittings in the elbow and tee forms. It has been found that although NPT/NPTF have a high static pressure capability, they are unreliable in dynamic applications, especially in the larger thread sizes 1″ and above. Parker therefore recommends the use of alternative thread forms and sealing, based on elastomeric seals for new applications and designs.

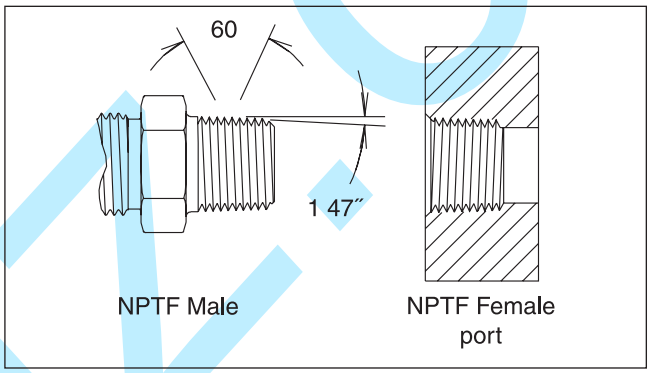

Fig. 1 – NPTF thread

NPT threads when assembled without a sealant, leave a spiral leak path at the crest-root junction as shown in Fig. F2. To seal pressurised fluid, NPT threads need a suitable sealer.

NPTF threads (Dryseal) on the other hand, when assembled, do not leave such spiral leak path. This is because they have controlled truncation at the crest and root, ensuring metal to metal crest-root contact as the male-female thread flanks make contact as seen in Fig. F3. Upon further tightening, the thread crests are flattened out until the flanks also make metal to metal contact as seen in Fig. F4. Theoretically, at least, there is no passage left for the fluid to leak, provided all surfaces are flawless and dimensions exact. In the real world, however, this is not the case and a sealant/lubricant is necessary to achieve a leak free joint even with NPTF threads. Because of the higher surface pressure contact with the NPTF design, Parker manufactures all Stainless steel adapters with the NPT thread form to reduce the possibility of thread galling (Cold welding effects).

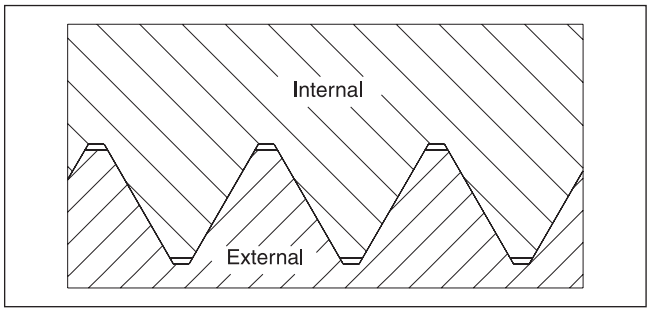

Fig. 2 – NPT – Wrench tight – No Crest-Root contact, Flank contact only.

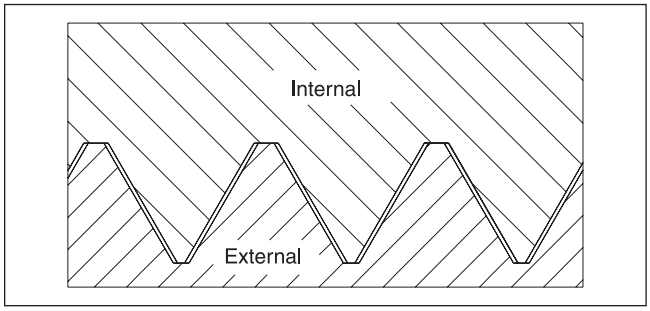

Fig. 3 – NPTF – Hand tight crest-root contact

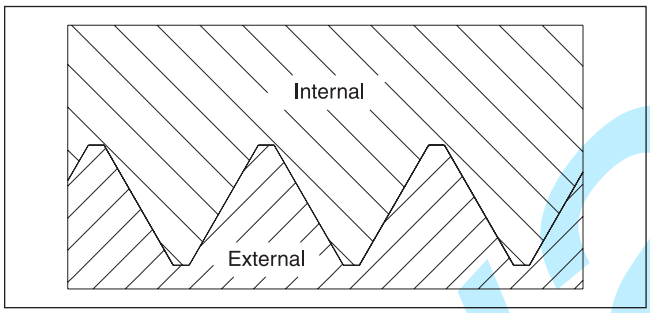

Fig. 4 – NPTF – Wrench tight crest-root and flank contact

Type of sealant/lubricant

Sealant/Lubricant assist in sealing and provide lubrication during assembly, reducing the potential for galling. Pipe thread sealants are available in various forms such as dry pre-applied, tape, paste and anaerobic liquid. PTFE tape, if not applied properly, can contribute to system contamination during assembly and disassembly. Paste sealants can also contribute to system contamination, if not applied properly. They are also messy to work with, and some types require a cure period after component installation, prior to system start up.

BSPT adapters

BSPT threads came from the British gas industry, where the outside diameter of a gas pipe was threaded at the end to allow a connection to be made. The thread form has a 55 degree flank angle, and the thread pitch is different generally to NPT threads. Therefore the two forms are not compatible. Today the BSPT thread is used in the pneumatics industry, but use on the hydraulics side is limited. In most cases, the BSPT male stud is screwed into a BSPP – parallel – port. Thread engagement in this situation is limited, giving lower holding power compared to NPT equivalents.

To seal BSPT threads, a sealant is always needed, since the sealing function is on the threads. BSPT fittings offer a limited adjustability when using elbow or tee types, and it is easy to overtighten and damage the port thread, stud thread or both. Re-useability is also therefore very limited. For all these reasons, BSPT threads should be limited to lower pressure applications with limited dynamic changes in pressure. Parker Hannifin does not use BSPT threads in it's "Dry Technology" programmes for this reason.

UNF thread adapters

Function of UNF adapters

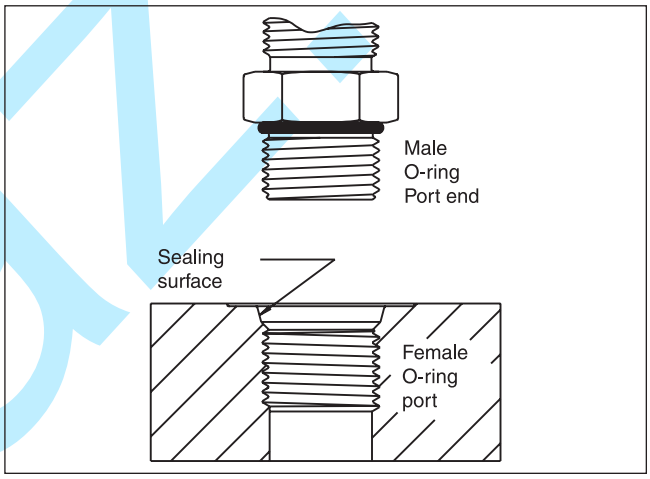

Fig. 5 – UNF port

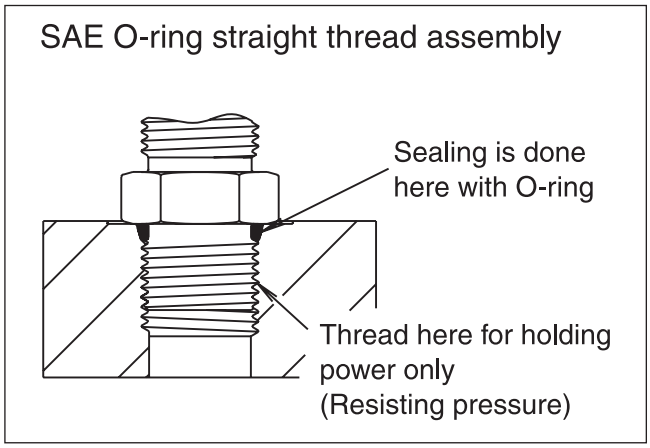

Fig. 6 – UNF port assembly

Parker fittings incorporating UN/UNF thread, O-ring port studs shown in this section are for connection with the UN/UNF thread ports. They are also known as O-Ring Boss (O.R.B.) connections. When properly assembled, they give performance equal to the best leak-free port connection available.

For this style of connection, the sealing and holding functions are separated. The threads have only the holding function. Thread tolerances are wider between the male stud and female port, and so the sensitivity to damage of the threads is much lower than the NPT for example. Sealing is achieved via a high durometer O-ring seal seated in a specially machined chamfer at the top of the port thread. When energised under pressure, the O-ring seals the only leak path. Good inititial compression of the seal, means that the joint is leak tight at low and high pressures.

Features, advantages and benefits

SAE straight thread

- **Elastomeric seal** – SAE straight thread O-ring connections offer a high sealing reliability, especially in dynamic and shock loading applications. The O-ring seal offers a high tolerance to minor surface imperfections and damage.
- **Ease of assembly** – This design is extremely easy to assemble, even for less experienced workers.
- **Infinite positioning of shaped fittings** – Due to the design of shaped fittings, incorporating adjustable SAE straight thread connections, they allow for infinite positioning of the port end. Aligning for tube and hose connections is much easier as compared to tapered threads.
- **Reusability** – Since the sealing and mechanical holding functions are separated, the SAE straight thread male studs can be re-used many times simply by changing the O-ring.

ISO 6149 adapters

The ISO 6149 connection design is similar to the UN/UNF, but with metric threads. The pressure performance of the connections is therefore similar, and also the user-friendly assembly characteristics. This design is recommended by the ISO standards committee for all new applications and designs. The ISO 6149 thread has gained widespread use with OEM's in the agricultural and construction equipment segments. Parker Hannifin offers one of the widest range of tube fittings and adapters to the ISO6149 standard.

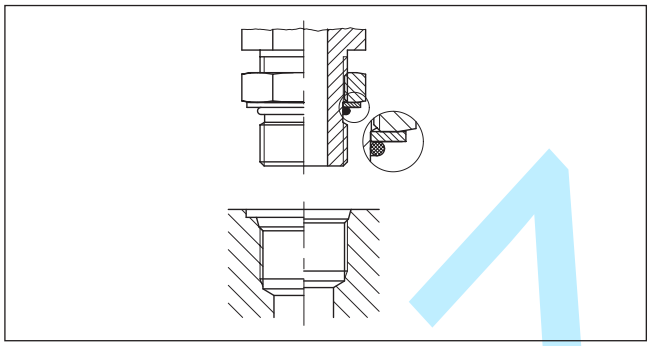

Fig. 7 – Adjustable UNF Port connection

Japanese Industrial Standard (JIS) adapters

JIS adapters are typically used as hose adapters on equipment designed or built in Japan or Korea. Sealing is achieved with a line contact between the surfaces of mating 60 degree cones on the fitting and the hose end. These adapters are made according to the JIS B8363 standard. Although they have the same cone angle and threads as the BSPP 60 degree cone adapters below, they are not interchangeable. (Longer thread lengths on the JIS female swivel fittings lead to threads bottoming out before the seal is made on the corresponding BSPP fitting).

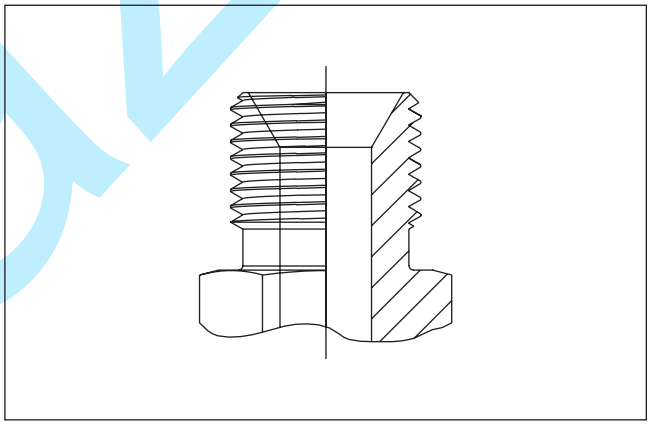

Fig. 8 – JIS adapter

BSPP thread adapters

British Standard Pipe (Parallel) threads are still the most widely type used today in the Fluid Power Industry in Europe. This section is split into two parts, covering the thread adapters and later the BSP hose adapters.

Function of 60 Deg cone

This form of BSPP adapter which has been modified to work as a hose adapter is still popular in the UK, Scandinavia and throughout the rest of Europe. These connections are standardised in BS5200. The bore of the BSPP thread is coned inwards with a 60 degree includ-

ed angle to match with a male cone of the same angle on a Swivel Female hose end see figure 9 below. When the nut is tightened, the two cone halves are clamped together to form a metallic seal. This type of connection is flexible in use, since the same thread end could also be used to screw into a BSPP threaded port.

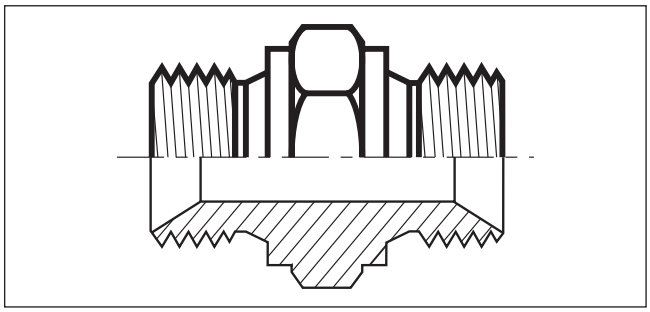

Fig. 9 – BSPP 60° cone adapter

Despite this flexibility, these adapters cannot be used as tube fittings in the same way as Triple-Lok®, O-Lok® or EO fittings, and therefore cannot be classed as a "universal system".

Many manufacturers produce the elbow and tee adapters by brazing together straight parts. This can result in the fitting being effectively annealed during the brazing process, and therefore the material is left in it's softest state. Parker tees and elbows are manufactured from high integrity forgings and offer superior long term performance.

Function of BSPP thread adapters

BSPP thread adapters are designed to work with ports that have been machined with a flat 'spot face' concentrically around the thread. This spot face provides a consistent flat sealing area, whether the port is in a machined valve block, or on the face of a pump housing casting. Originally, the sealing was in the form of a copper (or other ductile metal) washer, but today most adapters use some form of elastomeric seal.

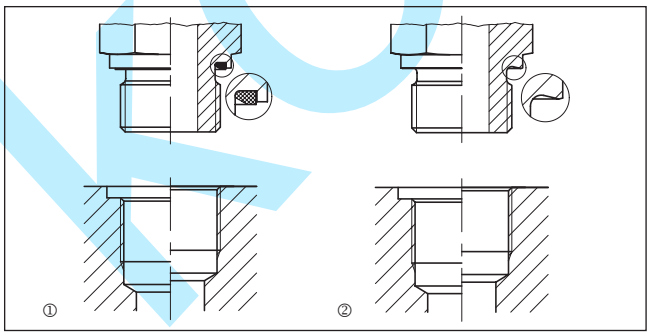

Fig. 10 – ①ED-seal; ② Form B

The highest performance is achieved by the ED seal version, followed by the O-ring and retainer ring, bonded washer and lastly the German "Form-B" metallic sealed design. In terms of adjustable fittings, they are only normally available in the O-ring and retainer version. The ED seal design does not lend itself to adjustability.

Metric thread adapters

Metric thread adapters have developed in parallel with the BSPP threaded adapters with a similar design based around the metric thread sizes.

Pipe (NPSM) swivel adapters

Function of NPSM swivels

NPSM swivel adapters are designed for use with male NPT/NPTF hose fittings that have a 30° machined seat. NPSM adapters do not seal on the threads like most NPT thread adapters, they seal on the nose of the NPSM swivel and the seat on the male NPT/NPTF pipe thread. This creates a metal to metal seal as shown in Fig. 11. The most important preparation prior to assembly is to make certain that the mating male NPT/NPTF pipe thread has a 30° seat as shown in Fig. 12.

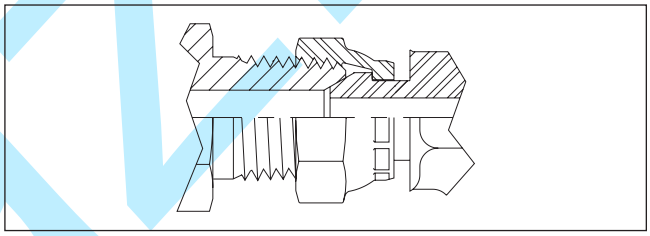

Fig. 11 – Illustration showing how NPSM swivel adapters seal on mating chamfer in male NPT thread

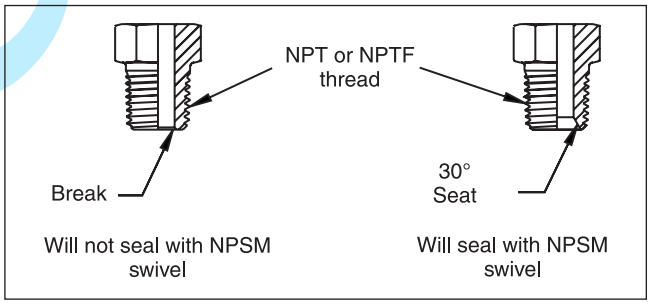

Fig. 12 – Illustration showing the required 30° seat on NPT/NPTF threads for NPSM swivel to seal

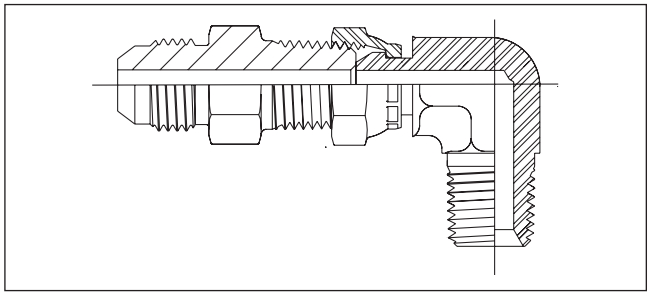

Fig. 13 – Chamfer of NPT/NPTF male thread does not provide appropriate contact for a reliable seal with cone of NPSM swivel

Thread configurations

Taper thread adapters NPTF and	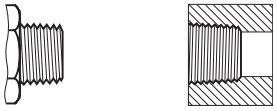	NPTF thread SAE J476-B2
BSPT	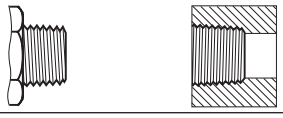	BSPT taper thread ISO 7
BSPP 60° cone adapters	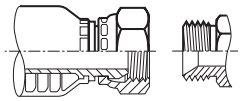	BSPP male parallel thread 60° female cone BS5200
	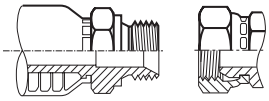	BSPP female parallel thread 60° male cone BS5200
JIS adapters	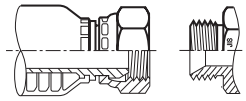	BSPP male parallel thread JIS B8363 60° female cone
	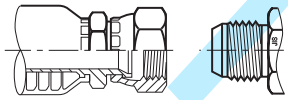	BSPP female parallel thread JIS B8363 60° male cone
37° Flare (Triple-Lok®) and	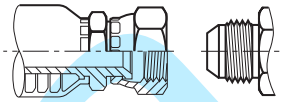	SAE 37° Flare UNF thread SAE J514 ISO 8434-2
ORFS (O-Lok®) adapters	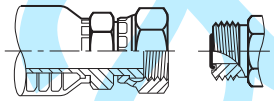	ORFS (O-ring Face Seal) UNF thread SAE J1453 ISO 8434-3
Male studs and female port threads	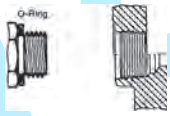	BSPP parallel thread O-ring and retaining ring according to ISO 1179
	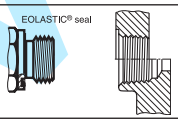	BSPP parallel thread with ED seal according to ISO 1179-2
	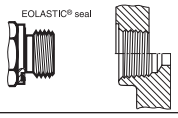	Metric parallel thread with ED seal according to ISO 9974-2
	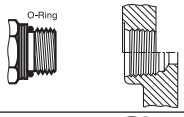	Metric straight thread ISO 6149-2+3
	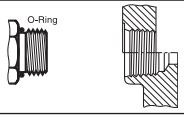	UN/UNF threads SAE J475 thread ISO 11926-2/-3
NPSM female Swivel adapters	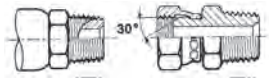	Hose adapters National pipe straight thread for mechanical joint 30° cone male / NPTF male thread. SAE J516

KOVASZ.CZ

Systematic fitting selection

Introduction

Product selection
Ultimate target is to find the “best solution”. This optimum solution provides high system reliability, easy assembly characteristics, low maintenance effort and avoids the use of exotic components.
This “best solution” is not the ultimately achieveable technology, but an adequate solution which fulfils the requirements of the individual application with minimum system cost.
The “best solution” looks different depending on the specific criteria of the given application.

Dry Technology
Modern HPCE fittings are designed for high reliability, easy assembly and lowest toal cost performance.

These products are marked *Dry Technology* and indicated grey in selection charts.

Parker recommends to select only *Dry Technology* products for all new designs.

Design criteria for fitting selection

Step 1
First clarify all design criteria for the given application or project.

Step 2
Then determine the “best solution” product. Use selection charts on following pages.

Application
- Hydraulic
- Pneumatic
- central lubrication
- process industry
- severeness

Pressure
- System pressure
- Pressure peaks

Temperature
- Medium
- Environment
- Operation/standstill

Medium
- hydraulic oil type
- Compressed air
- Water/seawater
- other fluids

Best solution

- **zero leakage**
- **high reliability**
- **easy assembly**
- **low total cost**
- **standard products**

Assembly
- Mass production
- On-site installation
- Industrial assembly
- Field repair

Flow rate
- Volume flow
- medium viscosity
- System dynamics
- Tube selection

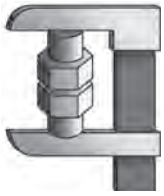

Space
- Space limitations
- Tube bending capabilities

Environment
- weather
- humidity
- Stationary/mobile

Specifications
- International standards
- End user specification
- approvals
- availability

Material selection: Fitting material

Environment
- **select fitting material with suitable corrosion resistance**

Medium
- **select compatible fitting material**

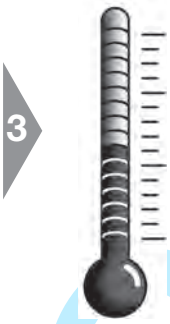

Temperature
- **check suitability**

Tube Material: Fitting material:	Steel, zinc-plated Steel, zinc-plated	Stainless steel Stainless steel	Copper Brass	Stainless steel Steel	Plastic Steel, Stainless steel, Brass
Performance characteristics:					
Pressure capability	Excellent	Excellent	Good	Excellent	Low
External temperature capability	Very good	Excellent	Very good	Very good	Depending on tube and material
Corrosion resistance	Good	Excellent	Very good	Good	Good
Internal media compatibility	Good	Excellent	Very good	Good	Good
Current use	Standard material combination for general use in hydraulic systems	Standard material combination for use with aggressive media or application in corrosive environments	Low to medium pressure applications in corrosive environment Use with compressed air (condensed water) or slightly corrosive media (water)	Special material combination for middly corrosive environments	Special material combination for low pressure applications
Typical applications:	Machine tools, Mobile construction equipment	Shipbuilding, Offshore exploration, Process engineering, Paper machines costal installations	Central lubrication systems, Pneumatics, cooling water tubes	Some airbrake systems in railway industry wet machining area on machine tools	Pneumatic systems on machine tools central lubrication and airbrakes in truck industry

Special Materials

"Due to their reliability and corrosion resistance, the austenitic stainless steel that we offer usually meet all the demands in markets, including the oil and gas, marine engineering, power generation, or pulp and paper among others.
However, the unique requirements of some of the projects often demand special approaches. Parker High Pressure Connectors Europe division understand those needs and has the technical knowledge and experience to help our customers to find the better solutions for their applications and meet even the most challenging demands. 1.4547 (6Mo), 1.4539, 2.1972 (CuNiFe), Inconel or other alloys might be offered on request."

Material selection: Sealing material

Medium
- **select compatible fitting material**

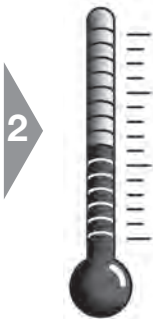

Temperature
- **check suitability**

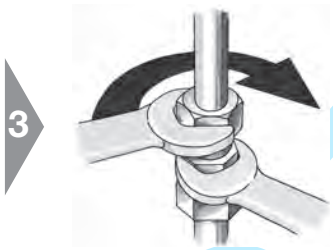

Assembly
- **Prefer elastomer sealing for easy assembly and economic service**

Sealing technology	metal-to-metal	nitrile rubber (NBR)-Elastomer	Fluorcarbon (FKM)-Elastomer
Performance characteristics:			
High pressure capability	Good	Excellent	Excellent
Low temperature capability	Excellent	Very good	Good
High temperature capability	Excellent	Good	Very Good
Media compability	Excellent	Good	Very Good
Long term reliability	Good	Excellent	Excellent
Assembly characteristics:			
Ease of initial assembly	Good	Excellent	Excellent
Repeated assembly	Good	Excellent	Excellent
Replacement of seal	Not possible	Easy	Easy
Current use	Suitable for aggressive media respectively for very low or very high temperatures	General use in – hydraulic – pneumatic – lubrication – airbrake systems	Hydraulic and pneumatic systems with high operating temperature process engineering: some aggressive media
Typical applications:	Process engineering Agricultural Equipment	Machine tools Hydraulic presses Mobile construction equipment	Steelmill equipment Casting machines

KOVASZ

B

LL/L/S Series selection for EO fittings

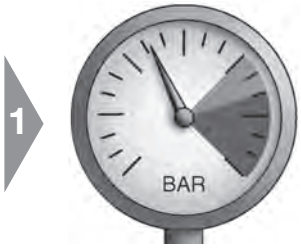

Pressure
- **select series with adequate pressure performance**

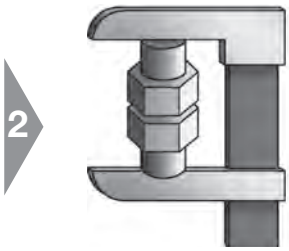

Space
- **select series according to available space**

Specification
- **prefer L or S series for best availability**

Series	**LL**	**L**	**S**
Example of order code	G06ZLLCF	G06ZLCF	G06ZSCF
Design	Very light	Light	Heavy
Performance PN Suitability for heavy duty applications	 100 bar Good	 160–500 bar Good	 315–800 bar Excellent
Tube dimension (mm)	4, 6, 8, 10, 12	6, 8, 10, 12, 15, 18, 22, 28, 35, 42	6, 8, 10, 12, 14, 16, 20, 25, 30, 38
Assembly Tightening effort Space requirement	 Very low Very low	 Normal Low	 High High
Current use	Very light design for space-limited assemblies in low to medium pressure applications	medium to high pressure fitting for general use in hydraulic and pneumatic systems	Rigid design for use in heavy-duty applications
Typical applications:	Central lubrication Airbrake systems fuel lines oil/gas stoves micro hydraulics	machine tools agricultural vehicles	hydraulic presses plastic injection molding steel mills shipbuilding Mobile construction equipment

KOVO CZ

Tube end selection

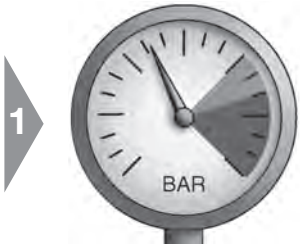

Pressure
- **select connection type with adequate pressure performance**
- **prefer elastomeric seal for most reliable sealing performance**

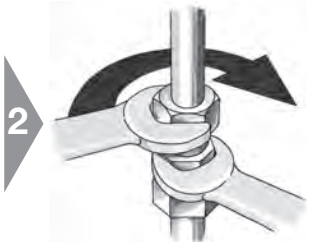

Assembly
- **select product with adequate assembly process**

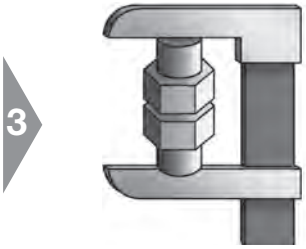

Space
- **select most suitable product**

Specification
- **fitting type according to project specification**

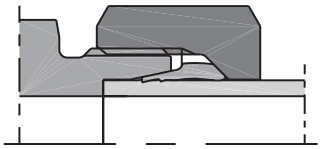

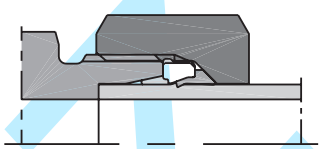

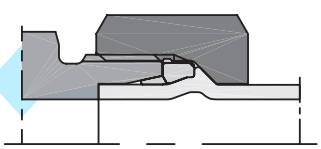

Type	**EO PSR/DPR** Metal seal bite type	**EO-2** Soft seal bite type	**EO2-Form** Tube forming
Sealing method	Metal seal	Elastomeric seal	Elastomeric seal
International Standard	ISO 8434-1	ISO 8434-1	ISO 8434-1/4
National Standards	DIN EN ISO 8434-1 (old: DIN 2353/DIN 3861)	DIN EN ISO 8434-1 (old: DIN 2353/DIN 3861)	DIN EN ISO 8434-1 (old: DIN 3861)
Tube compatibility	Metal and plastic tube (steel, stainless steel, copper, aluminium, polyamide …)		Steel, stainless steel, copper alloy
Available sizes (Tube O.D.)	4LL–12LL 6L–42L 6S–38S	4LL–6LL 6L–42L 6S–38S	Tube O.D. 6 to 42 mm 6L–42L 6S–38S
Performance seal reliability	Very good	Excellent	Excellent
Assembly Tube preparation Installation Field repair	 Excellent Good Very good	 Excellent Very good Excellent	 Good Excellent Use EO2
Space requirements	Excellent	Excellent	Good
Current use	Most popular fitting for metric tube		Heavy duty alternative to EO/EO2 and EO weld nipple
	Traditional bite type fitting new designs	Global popularity for all	
Typical applications	General use in hydraulic, pneumatic, lubrication and coupling systems		General use in high pressure applications
	Agricultural equipment Process engineering	Hydraulic presses Injection Molding Mobile equipment Heavy machinery Ship building	Hydraulic presses Injection Molding Mobile equipment Heavy machinery Ship building

B

Tube end selection

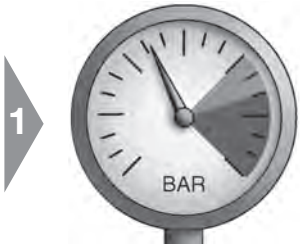

Pressure
- **select connection type with adequate pressure**
- **prefer elastomeric seal for most reliable sealing performance**

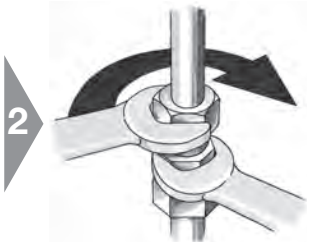

Assembly
- **select product with adequate assembly process**

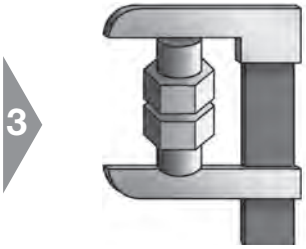

Space
- **select most suitable product**

Specification
- **fitting type according to project specification**

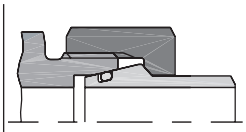

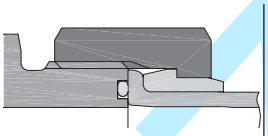

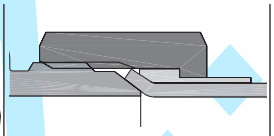

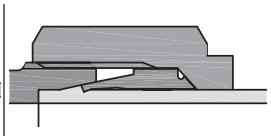

Type	**EO SKA** Weld nipple	**O-Lok®** O-Ring Face Seal (ORFS)	**Triple-Lok®** 37° Flare	**Ferulok®** Flareless Tube Fitting
Sealing method	Elastomeric seal	Elastomeric seal	Metal seal	Metal seal
International Standard	ISO 8434-1/4	ISO 8434-3	ISO 8434-2	
National Standards	DIN EN ISO 8434-1/-4 (old: DIN 3865)	SAE J1453/J516	SAE J514/J516	SAE J514 / MIL-F-18866H
Tube compatibility	Weldable steel and stainless steel	Metal tube (steel, stainless steel, copper, aluminium)		Metal and plastic tube (steel, stainless steel, copper, aluminium, nylon, polyethylene)
Available sizes (Tube O.D.)	6L–42L 6S–38S	Tube O.D. 6 to 50 mm Tube O.D. 1/4″ to 2″	Tube O.D. 6 to 42 mm Tube O.D. 1/8″ to 2″	Tube O.D. 1/8″ -2″
Performance seal reliability	Excellent	Excellent	Very good	Very good
Assembly Tube preparation Installation Field repair	 Difficult Excellent Difficult	 Good Excellent Use braze adapter	 Good Excellent Hand flaring	 Excellent Good Very good
Space requirements	Very good	Good	Very good	Excellent
Current use	Limited use in Northern Europe and Asia	Heavy duty *Dry Technology* alternative to Triple-Lok®		North America, limited use in Asia and Europe
		Most popular fitting for inch tube (metric tube on request)		
		USA, Europe, gaining acceptance in Asia.	Worldwide	
Typical applications	Limeted use for special applications	General use in high pressure-hydraulic	General use in hydraulic, pneumatic, lubrication and coupling systems	General use in hydraulic, pneumatic and lubrication systems
	Heavy machinery Ship building power plants	Mobile equipment Injection Molding Hydraulic presses Heavy machinery Ship building	Agricultural equipment* Process engineering	Process engineering, railways, mobile equipment

Flange type selection

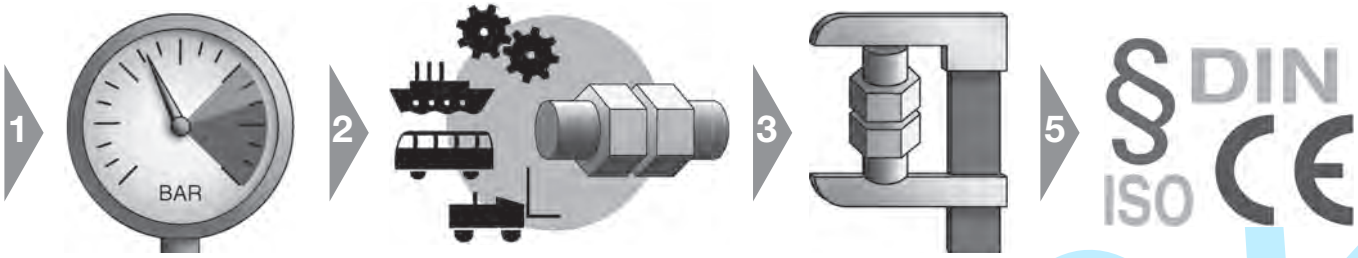

Pressure
- **select flange type connection with adequate pressure performance**

Application
- **select suitable flange type for specific application**

Space
- **select flange type according to available space**

Specification
- **select flange type according to project specification**

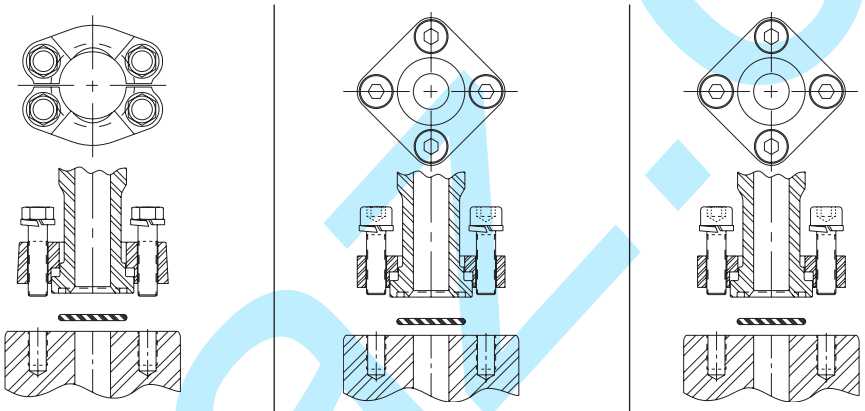

Flange type	**Four screw split flange**	**Four screw one piece square flange**	**Cetop flange**
Sealing method	Elastomeric seal	Elastomeric seal	Elastomeric seal
International standard	ISO 6162-1/-2	ISO 6164 (1994)	
National standard	DIN ISO 6162-1/-2/SAE J518	–	former Cetop
Tube compatibility	Combines weld and thread connections	Weld connection	Weld connection
Available sizes (Tube O.D.)	1/2″ up to 5″	3/8″ up to 4″	3/8″ up to 4″
Performance seal reliability	Excellent	Excellent	Excellent
Assembly Tube preparation Installation Field repair	 Good Excellent Good	 Difficult Excellent Difficult	 Difficult Excellent Difficult
Space requirements	Low	Low	Low
Used screws	metric screws according to: – DIN 912-8.8 (ISO 4762-8.8) or – DIN 912-10.9 (ISO 4762-10.9) UNC screws according to ASA B 18.3	metric screws according to: – DIN 912-8.8 (ISO 4762-8.8) or – DIN 912-10.9 (ISO 4762-10.9)	metric screws according to: – DIN 912-8.8 (ISO 4762-8.8) or – DIN 912-10.9 (ISO 4762-10.9)
Current use	Widely used throughout the world	Mainly used in Germany	Mainly used in Europe
Typical applications	Agriculture Hydraulic Offshore Ship building Cranes	Agriculture Hydraulic Offshore Ship building Cranes	Agriculture Hydraulic Offshore Ship building Cranes

B

Port/Stud selection

Pressure
- **select connection with adequate pressure performance**

Temperature
- **Use elastomeric seal when suitable**

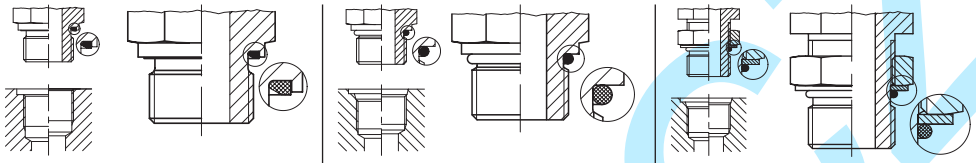

Port end selection:	**Male stud with EOLASTIC-seal**	**Male stud with O-Ring seal**	**Male stud adjustable with O-Ring seal**
Port description metric	**Male stud with EOLASTIC-sealing**	**Male stud with O-ring sealing**	**Male stud adjustable with O-ring sealing**
Thread	Metric	Metric	Metric
Example of order code EO =	GE12ZLMEDCF	GEO12ZLMCF	VEE12ZSMORCF
Example of order code Triple-Lok® =	8M16F82EDMXS	8M16F87OMXS;	8M18V87OMXS
Example of order code O-Lok® =	8M16F82EDML0S	8M16F87OML0S	8M18V87OML0S
Thread standard (Example)	M 16×1.5 ISO 261; ISO 724; DIN 13-T5-T7	M 16×1.5 ISO 261; ISO 724; DIN 13-T5-T7	M 18×1.5 ISO 261; ISO 724; DIN 13-T5-T7
Male stud standard	DIN EN ISO 9974-2 (old: DIN 3852 T11, type E)	DIN ISO 6149-2/3 (old: DIN 3852 T3, type F)	DIN ISO 6149-2/3
Port tapping standard	DIN EN ISO 9974-1 (old: DIN 3852 T1, type X, Y)	DIN ISO 6149-1 (old: DIN 3852 T3, type W)	DIN ISO 6149-1 (old: DIN 3852 T3, type W)
Performance characteristics – pressure capacity – sealing characteristics – additional sealant required	 Very high Excellent No	 Very high Excellent No	 High Very good No
Current use	Solid, soft sealing male studs. Known worldwide. Well suitable for using with gas and high pressure hydraulics.	New safe sealing system for all areas of application, especially suitable for high pressure hydraulics. Standard sealing for the future. Identifying marking for metric version is a groove at the collar.	New safe adjustable sealing system for all areas of application, especially suitable for high pressure hydraulics. Standard sealing for the future.
	Well suitable for soften for counter material (e.g. housing of Al-alloy).		
Port description inch	**Male stud with EOLASTIC-sealing**	**Male stud with O-ring sealing**	Male stud adjustable with O-ring sealing
Thread	BSP	UN/UNF threads	UN/UNF threads
Example of order code EO =	GE12ZLR1/4EDCF	GE12ZL3/4UNFCF	VEE12ZL3/4UNFCF
Example of order code Triple-Lok® =	8-4F42EDMXS	8F50XS	8V50MXS
Example of order code O-Lok® =	8-4F42EDML0S	8F50ML0S	8V50ML0S
Thread standard (Example)	G 1/4 A DIN/ISO 228-T1 BS 2779 GB: 1/4 BSPP Japan: 1/4 PF	3/4-16 UNF ISO 725/ANSI B1.1-1974	3/4-16 UNF ISO 725/ANSI B1.1-1974
Male stud standard	DIN 3852 T11, type E ISO 1179-2	ISO 11926-2/3	ISO 11926-2/3
Port tapping standard	DIN 3852 T2, type X, Y ISO 1179-1	ISO 11926-1	ISO 11926-1
Performance characteristics – pressure capacity – sealing characteristics – additional sealant required	 Very high Excellent No	 Very high Excellent No	 High Very good No
Current use	Solid, soft sealing male studs. Known worldwide. Well suitable for soften counter material (e.g. housing of Al-alloy). Well suitable for using with gas and high pressure hydraulics.	Predecessor of metric sealing system. Often used in USA. Well suitable for soften counter material (e.g. housing of Al-alloy). Well suitable for using with gas.	Predecessor of metric adjustable sealingsystem. Often used in USA. Well suitable for soften counter material (e.g. housing of Al-alloy).

Port/Stud selection

3

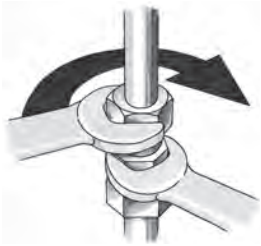

Assembly

- prefer O-Ring/ ED-seal for easy assembly and economic service
- avoid tapered threads

4

Application

- select standard connection for specific application

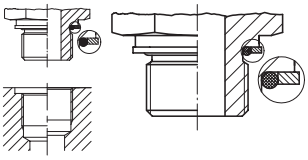

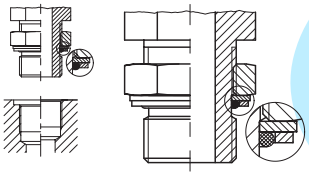

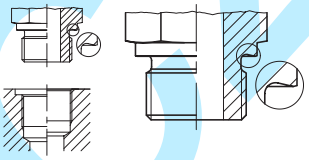

Port end selection:	Male stud O-ring retainer ring	Male stud adjustable with O-ring seal and Backup washer	Male stud with sealing by cutting face
Port description metric	**Male stud adjustable with O-ring sealing**	**Male stud adjustable with O-ring sealing**	**Male stud with sealing by cutting face**
Thread	Metric	Metric	Metric
Example of order code EO =	–	VEE12ZSMCF	GE12LMCF
Example of order code Triple-Lok® =	8M16F80MXS	8M18V80MXS	–
Example of order code O-Lok® =	–	8M18V80MLOS	–
Thread standard (Example)	M 18×1.5 ISO 261; ISO 724; DIN 13-T5-T7	M 18×1.5 ISO 261; ISO 724; DIN 13-T5-T7	M 16×1.5 ISO 261; ISO 724; DIN 13-T5-T7
Male stud standard	–	–	DIN EN ISO 9974-3 (old: DIN 3852 T3, type B)
Port tapping standard	DIN EN ISO 9974-1 (old: DIN 3852 T1, type X, Y)	DIN EN ISO 9974-1 (old: DIN 3852 T1, type X, Y)	DIN EN ISO 9974-1 (old: DIN 3852 T1, type X, Y)
Performance characteristics – pressure capacity – sealing characteristics – additional sealant required	Medium Good No	Medium to high Good No	High Medium to good No
Current use		New adjustable sealing system for all areas of application.	Suitable for aggressive media respectively for very low or high temperatures, where elastic sealing cannot be used.
	Used in Europe and Asia-Pacific areas.		
	Well suitable for soften counter material/e. g. housing of Al-alloy.		
Port description inch	**Male stud adjustable with O-ring sealing**	**Male stud adjustable with O-ring sealing and Backup washer**	**Male stud with sealing by cutting face**
Thread	BSP	BSP	BSP
Example of order code EO =	–	VEE12ZLRCF	GE12LR1/4CF
Example of order code Triple-Lok® =	8-F40MXS	8V40MXS	–
Example of order code O-Lok® =	–	8V40MLOS	–
Thread standard (Example)	G 3/8 A DIN/ISO 228-T1	G 3/8 A DIN/ISO 228-T1	G 1/4 A DIN/ISO 228-T1, BS 2779
Further standards	GB: 1/4 BSPP, Japan: 1/4 PF	GB: 1/4 BSPP, Japan: 1/4 PF	GB: 1/4 BSPP, Japan: 1/4 PF
Male stud standard	ISO 1179-3	ISO 1179-3	DIN 3852 T2, type B, ISO 1179-4
Port tapping standard	ISO 1179-1; DIN 3852 T2, type X, Y	ISO 1179-1; DIN 3852 T2, type X, Y	DIN 3852 T2, type X, Y, ISO 1179-1
Performance characteristics – pressure capacity – sealing characteristics – additional sealant required	High Very good No	Medium to high Good No	High Medium to good No
Current use	Used in Europe and Asia-pacific areas.	Solid, soft sealing male studs. Known worldwide.	Suitable for aggressive media respectively for very low or high temperatures, where elastic sealing cannot be used.
	Well suitable for soften counter material (e.g. housing of Al-alloy).		

Port/Stud selection

5 § DIN ISO CE

Specification

- **select connection type according to project specification**
- **prefer international standards**
- **select ISO 6149 for new designs**

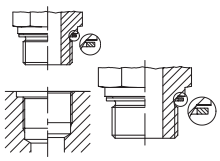
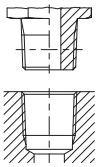
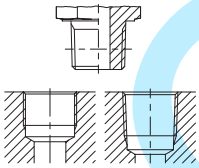
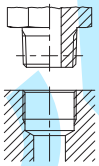

Port end selection:	**Male stud with sealing by metal sealing ring**	**Male stud with sealing by taper thread**	**Male stud with sealing by taper thread**	**Male stud with sealing by taper thread**
Port description metric	**Male stud with sealing by metal sealing ring**	**Male stud with sealing by taper thread**	–	**Male stud with sealing by taper thread**
Thread	Metric	NPT	–	Metric
Example of order code EO =	GE12LMACF	GE12L1/2NPTCF	–	GE08LLMCF
Example of order code Triple-Lok® =	–	8-8FMTXSS	–	–
Example of order code O-Lok® =	–	8-8FLOSS	–	–
Thread standard (Example)	M 16×1.5; ISO 261; ISO 724; DIN 13-T5-T7	1/2-14 NPT ANSI B1.20.1-1983	–	M 10×1.0 tap. DIN 158
Male stud standard	DIN 3852 T1, type A DIN 7603 (Sealing washer)	ANSI B1.20.1-1983	–	DIN 3852 T1, type C
Port tapping standard	DIN EN ISO 9974-1 (old: DIN 3852 T1, type X, Y)	ANSI B1.20.1-1983	–	DIN 3859 T1, type Z (parallel)
Performance characteristics – pressure capacity – sealing characteristics – additional sealant required	Low Medium No	Very high Medium Yes	–	Low Medium Yes
Current use	Partly used for pneumatics and gas applications.	Mainly used in North America. Some used in rest of the world. Male studs and port tapping are tapered. Sealing only achieved with fluid or plastic sealing material.	–	Only for low requirements due to parallel port. Leakfree performance is only achieved with fluid or plastic thread sealing material. Mainly used in Germany.
Port description inch	**Male stud with sealing by metal sealing ring**	**Male stud with sealing by taper thread**	**Male stud with sealing by taper thread**	**Male stud with sealing by taper thread**
Thread	BSPP	NPTF	BSPT	Shorter BSPT
Example of order code EO =	GE12LR1/4ACF	–	GE12LR1/2KLCF**)	GE12LR1/4KEGCF
Example of order code Triple-Lok® =	–	12FMTXS	8-8F3MXS	–
Example of order code O-Lok® =	–	12FLOS	–	–
Thread standard (Example)	G 1/4 A DIN/ISO 228-T1 BS 2779	3/4-14 NPTF ANSI B1.20.3-1983	R 1/2 ISO 7; DIN 2999-1 BS 21	R 1/4 (short) DIN 3858
Further standards	GB: 1/4 BSPP, Japan: 1/4 PF	–	GB: 1/4 BSPT; Japan: 1/4 PT	–
Male stud standard	DIN 3852 T2, type A DIN 7603 (Sealing washer)	SAEJ 476a	ISO 7; DIN 2999-1	DIN 3852 T2, type C
Port tapping standard	DIN 3852 T2, type X, Y ISO 1179-1	SAEJ 476a ANSI B1.20.3	ISO 7/1-Rp/Rc; DIN 2999-Rc BS 21-Rp/Rc; Japan PT-Port	DIN 3852 T2, type Z (parallel)
Performance characteristics – pressure capacity – sealing characteristics – additional sealant required	Low Medium No	Very high Medium Recommended	Medium Medium Yes	Low Medium Yes
Current use	More and more unimportant. Partly used for pneumatics.	Mainly used in North America. Male studs and port tapping are tapered. The same as NPT except that closer tolerances are held to assure metal to metal contact (dryseal thread).	Mainly used in GB and Asia-Pacific areas. Male studs are tapered. Ports are mainly tapered, but can be parallel also. Leakfree performance is only achieved with fluid or plastic thread sealing material. ****)Male stud end not included in the catalogue!**	Only for low requirements due to parallel port. Leakfree performance is only achieved with fluid or plastic thread sealing material. Mainly used in Germany. **Not to be used for BSPT ports and PT ports (Japanese Standard) due to poor thread engagement!**

Orientable Fitting Selection

1

Pressure

- **pre-select orientable fitting with sufficient pressure performance**
- **prefer elastomeric seal for most reliable sealing performance**

2

Flow Rate

- **select optimum solution for best flow rate and available space**

Type	90° tube bend and male stud		Swivel Elbow		Adjustable Elbow
	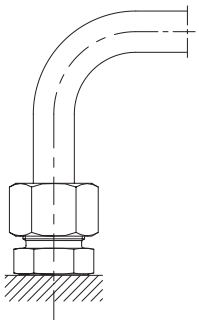	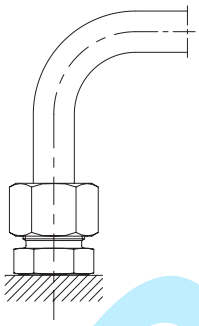	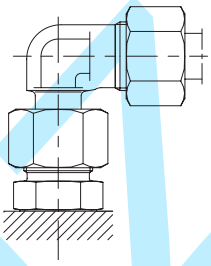	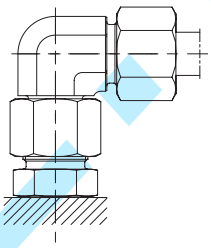	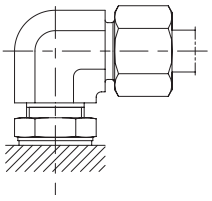
EO:	GE12LMCF	GE12ZLMEDCF	EVW	EW	WEE
Triple-Lok®:	FMTX, F3MX	F82EDMX	–	F82EDMX+C6MX	C80MX
O-Lok®:	–	F82EDMLO	–	F82EDMLO+C6MLO	C80MLO
Design	DPR/PSR Triple-Lok® Metal sealed port	EO-2 O-Lok® Elastomeric sealed port	Adjustable elbow with preassem- bled EO-DPR/PSR	Adjustable elbow with swivel nut connection	Adjustable Elbow with adjustable male stud
Sealing method	Metal	Elastomeric	Metal	Elastomeric	Elastomeric
Performance pressure Seal reliability Flow characteristics Compactness	 Good Good Excellent Bulky	 Excellent Excellent Excellent Bulky	 Good Good Very good Good	 Excellent Excellent Very good Good	 Very good Good Very good Very good
Assembly/Installation Field repair	Very good Good	Excellent Excellent	Good Good	Excellent Excellent	Very good Difficult
Available sizes	Tube Outside Diameter 4 mm to 42 mm for DPR/PSR Triple-Lok® 6 mm to 50 mm and 1/4 in to 2 in	Tube Outside Diameter 4 mm to 42 mm for DPR/PSR/EO-2 Triple-Lok® and O-Lok® 6 mm to 50 mm and 1/4 in to 2 in	Tube Outside Diameter 6 mm to 42 mm for DPR/PSR	Tube Outside Diameter 6 mm to 42 mm for for DPR/PSR/EO-2 Triple-Lok® and O-Lok® 6 mm to 50 mm and 1/4 in to 2 in	Tube Outside Diameter 4 mm to 42 mm for DPR/PSR/EO-2 Triple-Lok® and O-Lok® 6 mm to 50 mm and 1/4 in to 2 in
Available threads	Metric ISO 9974-3 BSPP ISO 1179-4 DIN 3852 Form B NPT/NPFT	Metric ISO 6149 Metric ISO 9974-2 BSPP ISO 1179-2 UN/UNF	Metric ISO 9974-3 BSPP ISO 1179-4 DIN 3852 Form B NPT/NPFT	Metric ISO 6149 Metric ISO 9974-2 BSPP UN/UNF	Metric ISO ISO 6149 Metric ISO 9974-2 BSPP ISO 1179-2 UN/UNF
Current use	preferred use is not critical when space		not for new design	general use	general use
Typical Applications	Agricultural Equipment process engineering	All hydraulic + pneumatic systems	Agricultural Equipment process engineering	All hydraulic + pneumatic systems	All hydraulic + pneumatic systems

KOVAZ.CZ

Orientable Fitting Selection

3

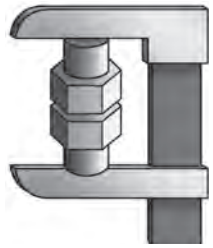

Space
- **select optimum solution for available space and best flow**

4

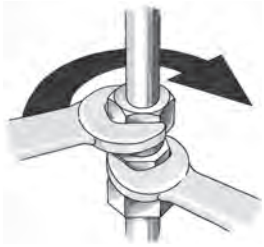

Assembly
- **check, if assembly process is suitable**

Type	Banjo		High pressure banjo	
	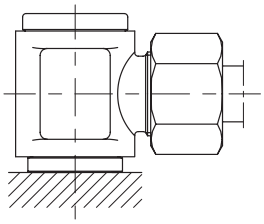	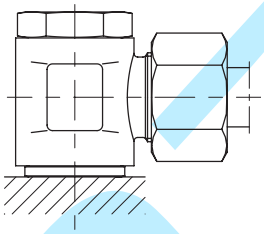	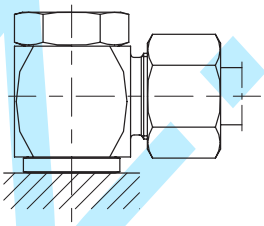	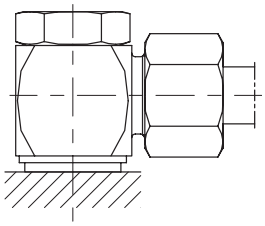
EO:	DSVW	SWVE	WH DKA	WH KDS
Triple-Lok®:	–	–	–	–
O-Lok®:	–	–	–	–
Design	Fitting body with hollow bolt and cap	Fitting body with hollow bolt	Fitting body with hollow bolt	Fitting body with hollow bolt
Sealing method	Metal	Metal	Metal	Elastomeric
Performance pressure Seal reliability Flow characteristics Compactness	 Low pressure Good Good Excellent	 Good Good Good Excellent	 Very good Good Good Excellent	 Very good Excellent Good Excellent
Assembly/Installation Field repair	Good Good	Very good Good	Very good Good	Excellent Excellent
Available sizes	Tube Outside Diameter 4 mm to 42 mm for DPR/PSR	Tube Outside Diameter 4 mm to 42 mm for DPR/PSR	Tube Outside Diameter 6 mm to 42 mm for DPR/PSR	Tube Outside Diameter 6 mm to 42 mm for DPR/PSR/EO-2
Available threads	– Metric DIN 3852 BSPP –	– Metric BSPP –	– Metric BSPP –	– Metric BSPP –
Current use	Low pressure systems only, not for new designs	Low pressure systems only	Best solution for limited application space	
Typical Applications	Airbrake systems Return lines	Low to medium pressure systems	Space critical applications such as: forklift trucks Mobile hydraulics	

Standardization

5

Specification
- **select fittings according to international standardisation**
- **check specification of end-customer/end user**
- **consider project-specific guidelines**
- **avoid non-standard items**

ISO-fitting standards				National Standards	
EO 24° fittings DIN EN ISO 8434-1/-4 (former: DIN 2353)	**Triple-Lok®** ISO 8434-2 • 37° flared fittings	**O-Lok®** ISO 8434-3 • O-ring face seal fittings	**K4 Adapter** ISO 8434-6 • BSPP 60° cone adapter	**P4 Adapter** JIS B 8363 JIS BSPP 60° cone dapter	**NPSM-Adapter** SAE J 516 NPTF 30° cone

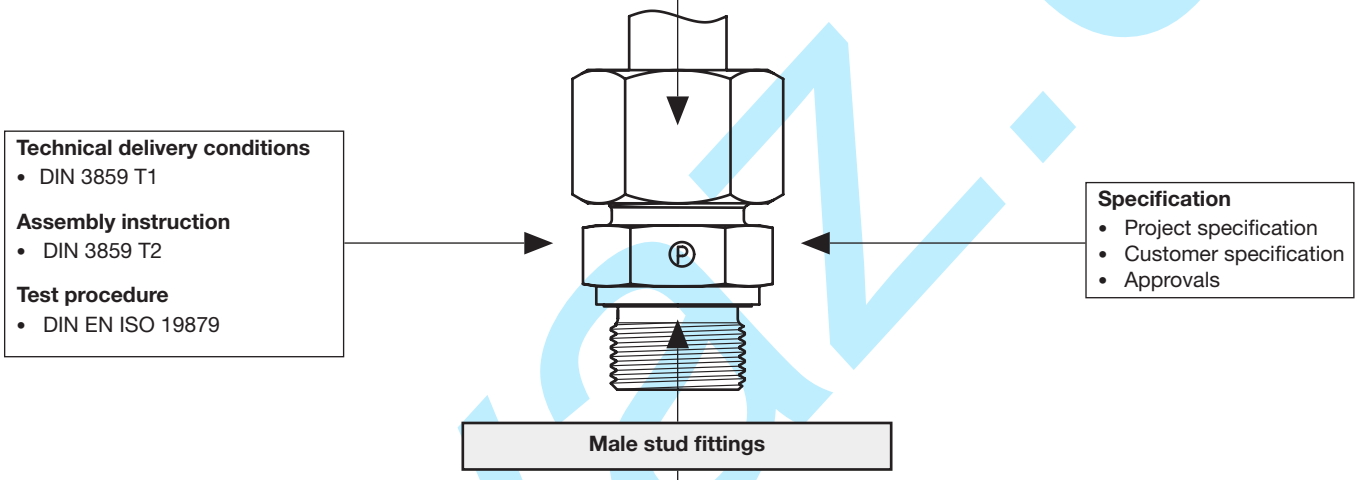

Stud ends Metric thread	Stud ends BSPP thread	Stud ends UN/UNF thread	Stud ends NPT thread NPTF thread	Stud ends BSPT thread
• DIN ISO 6149 • DIN EN ISO 9974	• ISO 1179 • DIN 3852 T11 • DIN 3852 T2	• ISO 11926	• SAE J476	• ISO 7

Approvals

Parker tube fittings are recognized by various acceptance organizations, among which are:

Germanischer Lloyd (GL)
Lloyds Register of Shipping (LR)
Det Norske Veritas (DNV)
American Bureau of Shipping (ABS)
Russian Maritime Register of Shipping (RMS)
China Classification Society (CCS)
Deutscher Verein des Gas- und Wasserfaches (DVGW)

For other applications, Parker tube fittings also approved by diverse national authorities.

Numerous original equipment manufacturers and end-users of various industries have approved Parker tube fittings.

Attention:

Type Approvals usually are limited to certain products, applications, working conditions, validity time or other restrictions. We gladly inform you on your individual application and send out the required documentation.

B

Tube Specifications

Tubes with metric outside diameters

Tube material Steel	Speci-fication	Construction	Condition	Tolerances OD/ wallthickness	Surface	Suitable fitting systems DPR/PSR/ EO-2	EO-2 Form	T- Lok®	O-Lok®	Note
E235 (= 1.0308)	DIN EN 10305-4	Seamless cold drawn	+N (= normal annealed)	EN 10305-4	phosphated, oiled or A3C or CF	X	X	X	X	1)
R37	ISO 3304		NBK (= normal annealed)	ISO 3304		X	X	X	X	2)
E355 (= 1.0580)	DIN EN 10305-4		+N (= normal annealed)	EN 10305-4		X	X	X	X	3)
R50	ISO 3304		NBK (= normal annealed)	ISO 3304		X	X	X	X	4)

Tube material Stainless steel	Speci-fication	Construction	Condition	Tolerances OD/ wallthickness	Surface	Suitable fitting systems DPR/PSR/ EO-2	EO-2 Form	T- Lok®	O-Lok®	Note
1.4571 (= TP 316 Ti)	DIN EN 10216-5	Seamless cold drawn	CFA	DIN EN 10305-1	plain	X	X	X	(X)	5)
1.4541 (= TP 321)						X	(X)	X	(X)	6)
1.4404 (= TP 316L)	EN ISO 1127 or ASTM A269/A213		Solution heat treated (bright annealed)	D4/T3* (EN ISO 1127) or ASTM A269/A213		X	(X)	X	X	7)
1.4301 (= TP 304)						X	(X)	X	X	8)
1.4306 (= TP 304L)										
1.4401 (= TP 316)	EN ISO 1127	Welded tube	DIN 17457-K2 for OD 6–12 mm, cold drawn welded (CDW) with smooth outer surface for OD 14–42 mm		plain, weld seam approx. invisible	X	(X)	X	X	9)
1.4301 (= TP 304)						X	(X)	(X)	(X)	10)
1.4541 (= TP 321)						X	(X)	(X)	(X)	

Tube material Copper	Speci-fication	Construction	Condition	Tolerances OD/ wallthickness	Surface	Suitable fitting systems DPR/PSR/ EO-2	EO-2 Form	T- Lok®	O-Lok®	Note
Cu DHP R290/250/200	EN 1057 EN 12449	Seamless tube	EN 1057 EN 12449	EN 1057 EN 12449	clean, smooth plain	X	X	X	X	11)

1) Recommended EO standard precision tubes for high pressure hydraulic applications. Tight tolerances for easy handling. Good bendability and weldability.
2) Tolerance on large tube OD's not as tight as EO tube.
3) Precision tubes for very high pressure hydraulic applications. Tight tolerances for easy handling. Good bendability and weldability.
4) Tolerance on large tube OD's not as tight as EO tube.
5) Recommended EO standard precision tubes for high pressure hydraulic applications. Tight tolerances (same as steel tubes) for easy handling. Good weldability and corrosion resistance. ( ) = on request
6) Recommended EO standard precision tubes for high pressure hydraulic applications. Tight tolerances (same as steel tubes) for easy handling. Good weldability. ( ) = on request
7) Common tube, OD. tolerance not as tight as EO tube. Good weldability and corrosion resistance. ( ) = on request
8) Common tube, OD. tolerance not as tight as EO tube. ( ) = on request
9) Common tube, OD. tolerance not as tight as EO tube. ( ) = on request
10) Used in Pneumatic (low pressure) applications. ( ) = Only for tube with smooth outer and inner surface.
11) Support sleeve "VH" may be required, e.g. for R250-28x1.5.

* = For DPR/PSR/EO-2 systems: thin walled tubes which need a support sleeve require tighter tolerance class T4. Tube O.D. tolerance class D3 is not recommended. D3 may reduce function and capability of the tube connection systems. The outside diameter tolerance is theoretically too large for EO2-FORM and an outer tube diameter of 25-42 mm.

Tube Specifications

Tubes with imperial (inch) outside diameters

Tube material Steel	Specification	Construction	Condition	Tolerance OD/ wallthickness	Surface	Suitable T- Lok®	Suitable O-Lok®	Note
Carbon steel C-1010	SAE J524 (AMS 5050 J, ASTM A179)	Seamless	Fully annealed	SAE J524 (AMS 5050 J, ASTM A179)	plain, oiled	X	X	1)
	SAE J525	Welded and drawn		SAE J525		X	X	2)

Tube material Stainless steel	Specification	Construction	Condition	Tolerance OD/ wallthickness	Surface	Suitable T- Lok®	Suitable O-Lok®	Note
1.4404 (= TP 316L)	ASTM A269, ASTM A213	Seamless	Fully annealed	ASTM A269, ASTM A213	plain	X	X	3)
1.4301 (= TP 304)						X	X	4)
1.4401 (= TP 316)						X	X	
1.4404 (= TP 316L)	ASTM A249, ASTM A269	Welded and drawn		ASTM A249, ASTM A269		X	X	
1.4301 (= TP 304)						X	X	
1.4401 (= TP 316)						X	X	

Tube material Copper	Specification	Construction	Condition	Tolerance OD/ wallthickness	Surface	Suitable T- Lok®	Suitable O-Lok®	Note
Copper	SAE J528 (ASTM B-75)	Seamless	Soft annealed Temper “O”	SAE J528 (ASTM B-75)	plain	X	X	4)

1) Recommended EO tubes for Hydraulic/Pneumatic applications
2) Common tubes in North-America
3) Recommended tubes for Hydraulic/Pneumatic applications. Good weldability and corrosion resistance
4) Tubes in North-America

Kovar.nl

Fitting selection summary

Traditional bite-type fittings have been originally developed and designed for operating conditions of fluidpower systems completely different from todays and future market requirements.

New products and improved assembly technologies have been developed and introduced by Parker to fulfill todays and future requirements of the operators of fluidpower equipment. This new tube fitting generation and the according assembly methods are classified as *Dry Technology*. All qualifying products are explicitly *Dry Technology*-labelled throughout this catalogue.

For all new designs of

- hydraulic systems
- pneumatic systems,
- coolant systems,
- lubrication systems and
- sprinkler systems

only *Dry Technology*-classified components should be selected.

Dry technology versus traditional technology

EO-2 versus bite type

\+ Elastomeric seal
\+ Sufficiant seal volume to compensate tube tolerance
\+ High degree of fine sealing
\+ Long-term reliability without retightening
\+ No air ingress
\+ Clear hit-home-feel at assembly
\+ Easy assembly check
\+ Integrated preassembly tool
\+ No stress of inner cone of fitting body
\+ No wear of preassembly tools
\+ Direct assembly of stainless steel tubes possible (EO-2)
\+ No galling of stainless steel threads
\+ Existing tools and EOMAT machines can be used for efficient assembly (EO-2)
\+ All parts integrated in Functional Nut (EO-2)
\+ No confusion of individual ferrules
\+ Less handling effort
\+ Unlimited repeated assembly
\+ Seal can be individually replaced
\+ ISO-standardised (DIN EN ISO 8434-1)
\+ Million times proven product since 1993 (EO-2)
\+ Interchangeable with EO Progressive Ring (EO-2)
– Higher component cost than traditional bite-type fittings
\+ Low total cost
\+ Best value for end user
\+ Mandatory specified from various industries, such as:
automotive production, injection molding, mobile equipment, shipbuilding and offshore exploration
\+ Globally gaining popularity

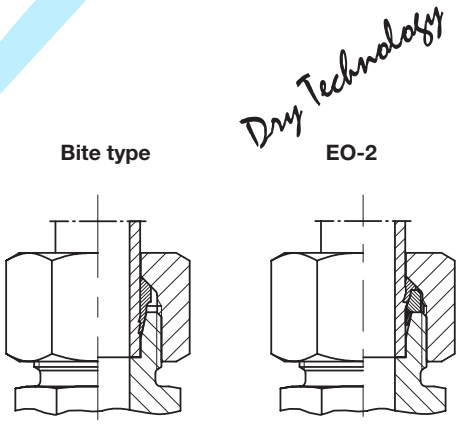

Novaz.cz

O-Lok® versus traditional Triple-Lok®

+ Higher pressure resistance than Triple-Lok®
+ Elastomeric seal
+ Sufficiant seal volume to compensate tube tolerance
+ High degree of fine sealing
+ Long-term reliability without retightening
+ No air ingress
+ Clear hit-home-feel at assembly
+ Easy assembly check
+ Easy installation of flat-face components
+ Superior vibration resistance
+ Parflange® orbital flanging technology
+ Unlimited repeated assembly
+ Seal can be individually replaced
+ ISO-standardised (DIN EN ISO 8434-2)
+ Million times proven product
– Higher component cost than Triple-Lok®
– Parflange® machine required
+ braze sleeves can be used for field repair
+ Low total cost
+ Best value for end user
+ Mandatory specified from various industries, such as: agricultural equipment, mobile construction machines, injection molding
+ Globally gaining popularity

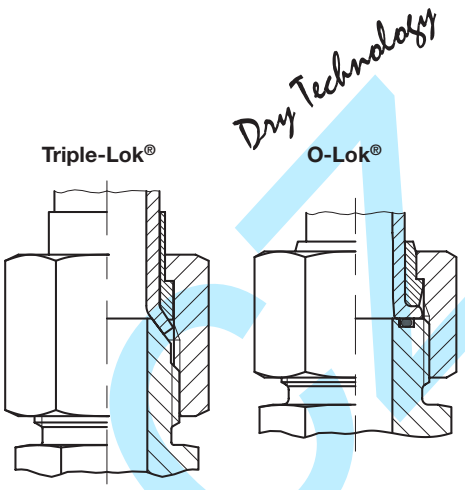

EO2-FORM versus traditional Weld nipple

+ Safe, form-fit connection
+ Easy assembly process
+ trouble-free with zinc-plated tube
+ Elastomeric seal
+ Sufficiant seal volume to compensate tube tolerance
+ High degree of fine sealing
+ Long-term reliability without retightening
+ No air ingress
+ Clear hit-home-feel at assembly
+ Easy assembly check
+ Easy tube preparation
+ Easy quality inspection
+ No rework of welding
+ Use of existing EO-2 seals
+ Unlimited repeated assembly
+ Seal can be individually replaced
+ ISO-standardised (DIN EN ISO 8434-1/-4)
+ Basic product EO-2 is million times proven
+ Interchangeable with EO Progressive Ring (EO-2)
+ No new or additional components required
– Higher component cost than traditional bite-type fittings
– EO2-FORM machine required
+ EO-2 can be used for field repair
+ Low total cost
+ Best value for end user
+ Approved for application in hydraulic presses, injection molding, lifts, waterlocks and shipbuilding
+ Globally gaining popularity

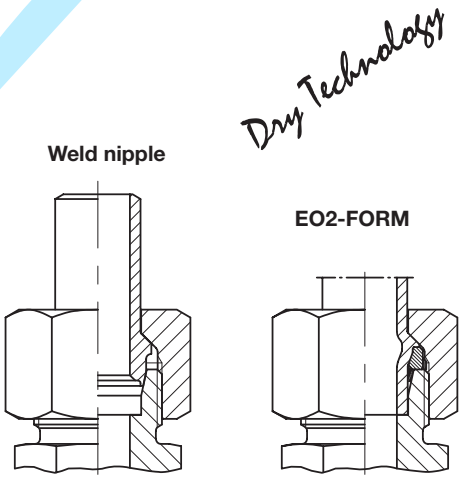

hovaz.cl

B

Swivel adjustable versus traditional standpipe

+ Elastomeric seal
+ High degree of fine sealing
+ Long-term reliability without retightening
+ No air ingress
+ Superior pressure rating
+ High mechanical strength
+ No blow-out at incomplete assembly
+ Easy fitting installation
+ No stress of inner cone of fitting body
+ No wear of preassembly tools
+ Unlimited repeated assembly
+ Seal can be individually replaced
+ ISO-standardised (DIN EN ISO 8434-1/-4)
+ Milliontimes proven product since 1970
+ Interchangeable with EO standpipe fittings
– Higher component cost than traditional standpipe fittings
+ Low total cost
+ Best value for end user
+ Mandatory specified from various industries, such as: automotive production, injection molding, mobile equipment, shipbuilding and offshore exploration
+ Most frequently used and still gaining popularity

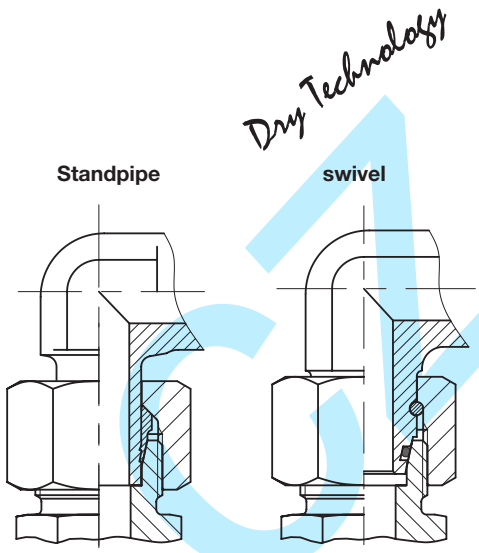

Male stud with Eolastic or O-ring seal versus traditional Metal seal tapered thread

+ Elastomeric seal
+ High degree of fine sealing
+ Long-term reliability without retightening
+ No air ingress
+ Superior pressure rating
+ Clear hit-home-feel at assembly
+ No damage to port surface
+ Assembly and performance almost independant of port material
+ Low assembly torques
+ No metal sealing edge which may be damaged at transport or handling
+ Unlimited repeated assembly
+ Seal can be individually replaced
+ ISO-standardised (ISO 1179/ISO 6149/DIN ISO 6149)
+ Million times proven product since 1964
+ Interchangeable with traditional fittings
+ Wider product range and better availability
– Higher component cost than traditional bite-type fittings
+ Low total cost
+ Best value for end user
+ Mandatory specified from various industries, such as: automotive production, injection molding, mobile equipment, shipbuilding and offshore exploration
+ Most frequently used and still gaining popularity

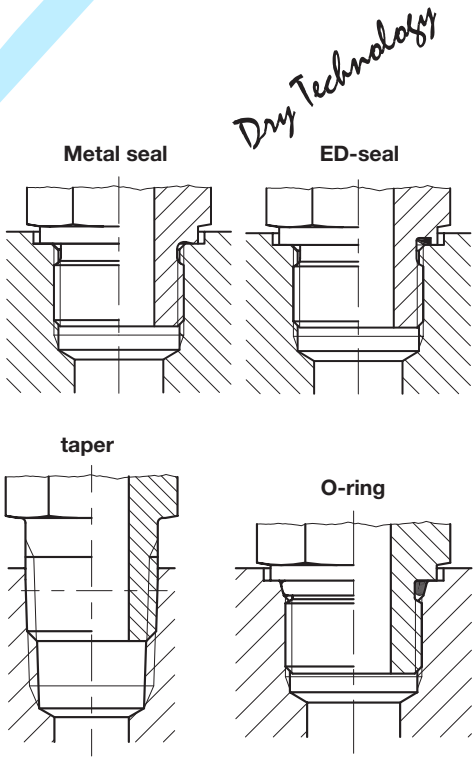

Novaz.cz

Locknut Adjustables versus tapered thread

+ Elastomeric seal
+ High degree of fine sealing
+ Long-term reliability without retightening
+ No air ingress
+ Good flow characteristic
+ 360° orientable
+ More compact than swivel orientable combination
+ No additional sealant required
+ Clear hit-home-feel at assembly
+ No damage to port surface
+ Assembly and performance almost independant of port material
+ Low assembly torques
+ Unlimited repeated assembly
+ Seal can be individually replaced
+ Interchangeable with traditional fittings
+ Available in 90°, 45° elbow, T- and Run-T-configuration
– Machined spot surface required
+ Lower price than Banjo fittings
+ Low total cost
+ Best value for end user
+ Globally gaining popularity

Dry Technology

taper

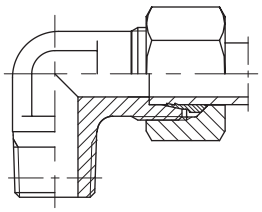

Locknut

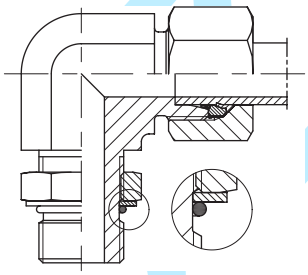

High pressure banjo versus traditional low pressure elbow

+ Elastomeric seal
+ High degree of fine sealing
+ Long-term reliability without retightening
+ No air ingress
+ 360° orientable
+ Compact design
+ Suitable for high pressure applications
+ Matching small spot surface
+ Clear hit-home-feel at assembly
+ No damage to port surface
+ Assembly and performance almost independant of port material
+ Seal does not fall off
+ Only one hollow bolt needs to be tightened
+ No hidden screw
+ Unlimited repeated assembly
+ Seal can be individually replaced
+ Million times proven product since 1980
+ Interchangeable with traditional fittings
+ Available in 90°elbow and T-configuration
– Slight flow restriction
+ Low total cost
+ Best value for end user
+ Globally gaining popularity

Dry Technology

Low pressure

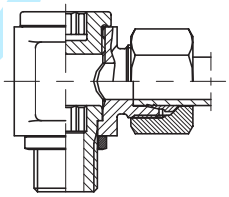

High pressure

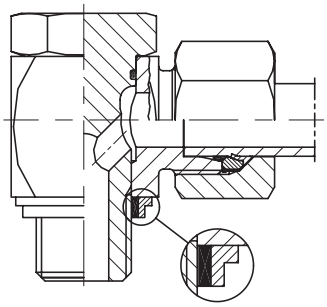

Novaz.cz

Parker

EO® Ermeto Original
Performance data

Pressure rating

Nominal pressure PN

The Nominal pressure PN is a figure relating to the pressure rating of a fluid component for continuous dynamic applications. It is rounded to correspond to internationally standardised ratings. Logical series of fittings are grouped together, with the nominal pressure of the group being that of the "lowest common denominator" within the group.

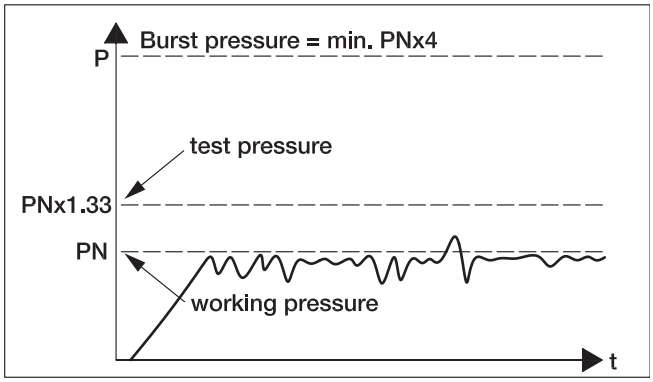

Internationally, these nominal pressures are recognised and serve to match common sizes of components together. Parker tube fittings meet or exceed common standardised pressure ratings.
To prove the long term dynamic load resistance, components are tested under pressure impulse conditions of PN × 1.33, at 1Hz **for 1 million cycles.** Static test burst pressures are at least 4 times the PN value.
Exception: for ball valves the static test burst pressures are at least 1.5 times the PN value according to DIN 3230 T5 and ISO 5108.

Conversion chart

Bar	Mpa	PSI
100	10.0	1450
160	16.0	2321
210	21.0	3045
315	31.5	4569
350	35.0	5075
400	40.0	5801

Pressure reductions and temperatures

Required pressure reductions (dependant on the material) with reference to the catalogue pressures for higher temperatures.
Both metal fitting material and elastomeric sealing compound have to be selected according to the temperature range of the system.
Attention: Fluid Compatibility see page C5.

Fittings material	Pressure reduction of permissible operating temperatures TB in °C														
	–60	–50	–40	–35	–25	+20	+50	+100	+120	+150	+175	+200	+250	+300	+400
Steel, fittings			0 %							–11 %	–19 %		–28 %		
Steel, tubes			0 %							–19 %			–27 %		
Stainless steel, fittings	0 %								–11 %			–20 %		–30 %	
Stainless steel, tubes	0 %						–5.5 %	–11.5 %	–21.5 %				–29 %		–34%
Brass, fittings[1)]	-35 %														
Sealing material NBR (e.g. Perbunan)															
Sealing material FKM															
Sealing material EPDM[2)]															

Permissible operating temperature
Ambient temperature of hydraulic and pneumatic applications
Temperature not permissible

Perbunan = registered trademark of Bayer
[1)] 35 % from material 1.4571 (if not extra shown in PN-Column"MS" for Brass)
[2)] EPDM is not compatible with oil (not normally held in Stock)

Calculation example:
PN fitting 16S/71 = 400 bar
Temperature = 200°C
Material = Stainless steel
Pressure reduction fittings = 20 %
Pressure reduction tubes = 21,5 %
PN tube 16 × 2.5/71, DIN 2413 III = 362 bar

Formula:

$$PN_{\text{fitting }200°C} = \frac{400\text{ bar}}{100\%} \times (100\%–20\%) = 320\text{ bar}$$

$$PN_{\text{tube }200°C} = \frac{362\text{ bar}}{100\%} \times (100\%–21{,}5\%) = 284\text{ bar}$$

C

Materials

Fittings	Raw material	Material				Fitting type									
						EO				O-Lok®			Triple-Lok®		
		Designation[2]	Material No.	Standard	US Designation[2]	Bodies	Nuts	Ferrules	Weld fittings	Bodies	Nuts	Sleeves	Bodies	Nuts	Sleeves
Steel	Barstock Free cutting steel	11SMnPb30	1.0718	DIN EN 10277-3	SAE 12L14	X				X		X	X		X
		11SMn30	1.0715	DIN EN 10277-3	SAE 1213	X									
		46S20	1.0727	DIN EN 10277-3	SAE 1146	X									
	Forgings	15S10	1.0710	DIN 1651		X									
	Free cutting steel	11SMn30 modified	1.0715	DIN EN 10087	SAE 1213 modified					X			X		
		36SMn14	1.0764	DIN EN 10087		X									
		C45 modified	1.0503	DIN EN 10083	SAE 1045 modified		X				X			X	
	Extrusion steel	C10C	1.0214	DIN EN	SAE C1010		X				X	X		X	X
	Weldable steel	C15	1.0401	DIN 10277-3					X						
	Other	Steel at the manufacturers discretion special heat treated						X							X
Stainless steel	Barstock	X6CrNiMoTi 17-12-2	1.4571	DIN EN 10088	ANSI 316TI	X	X		X						
		X2CrNiMo 17-13-2	1.4404	DIN EN 10088	ANSI 316L					X	X	X	X	X	X
	Forgings	X6CrNiMo Ti17-12-2	1.4571	DIN EN 10088	ANSI 316TI	X	X		X						
		X5CrNiMo 17-12-2	1.4401	DIN EN 10088	ANSI 316					X	X	X	X	X	X
	Other	Stainless steel at the manufacturers discretion special heat treated						X							
Brass	Barstock	CuZn35Ni2	2.0540	DIN 17660		X	X	X							
				ASTM B16/B453	CA360/345					X	X	X	X	X	X
	Forgings	CuZn35Ni2	2.0540	DIN 17660		X									
				ASTM B124	CA377					X			X		

1) Non standard fitting types like e.g. banjo fittings, rotary fittings, adjustable fittings with locknut and flanges might be made from different materials.
2) Equivalent materials may be used
Forging: 11 SMn 30+Bi (similar to 1.0715/DIN EN 10087)
Straight: 11 SMn Pb30 (1.0718/DIN EN 102773)

Special Material
"Due to their reliability and corrosion resistance, the austenitic stainless steels that we offer usually meet all the demands in markets, including the oil and gas, marine engineering, power generation, or pulp and paper among others. However, the unique requirements of some of the projects often demand special approaches. Parker Tube Fitting Division Europe understand those needs and has the technical knowledge and experience to help our customers to find the better solutions for their applications and meet even the most challenging demands. 1.4547 (6Mo), 1.4539, 2.1972 (CuNiFe), Inconel or other alloys might be offered on request."

Sealings	NBR	e.g. N552-90, Perbunan (registered trademark of Bayer)
	FKM	e.g. V894-90
	EPDM	e.g. E540-80
	PTFE	e.g. Teflon® (registered trademark of DuPont)
	POM	e.g. Delrin (registered trademark of DuPont)

Surface treatment

Parker tube fittings from steel are delivered worldwide with a high quality surface protection:

Galvanic zinc plated and bright passivated with special sealer (suffix CF).

Why zinc plated?

The requirements for corrosion resistance of tube fittings have been increasing in the past few years. Increasingly tube systems are not painted. Higher demands are requested also for an aesthetic point of view.

The traditional black-grey surface "phosphated and oiled" (Znphr5f – DIN 50942) used for tube connections in the past does not longer meet these demands. An galvanized deposit zinc layer offers the following advantages: The corrosion resistance increases significantly due to a plating of min. 8 µ and additional sealing by chromating process. In case of scratches or nicks – which are unavoidable during assembly – zinc develops a cathodical protection of the steel fitting body against localised corrosion and abrasion.

The corrosion resistance of the CF surface is 400 % above zinc plated surfaces to meet highest requirements. The CF surface is also Cr(VI)-free to avoid any contamination in the manufacturing process and meets current regulations e.g. European "End of Life Vehicles" directive.

The silver bright colour due to the chromating or passivation process offers an attractive appearance.

All major HPCE manufacturing locations are equipped with their own modern galvanic plants. The process control is specially orientated to the tube fitting product.

The users of Parker fittings benefit from:

- homogeneous thickness of plating (average 13 µm), measured on outside contour for good screwable threads
- high quality above-average concerning avoidance of nicks
- very good corrosion resistance

Continuous corrosion tests like salt spray tests according to ISO 9227/5% NaCl show an average resistance of 500 hr in contrast to white rust and 700 hr in contrast to red rust for CF surfaces.

Particular fitting series or fitting components and valves are delivered with other or modified surfaces for functional reasons or for better differentiation.

			Surface protection/Surface						
Material	Fitting system	Fitting type	CF/Cr3* Zinc plated bright passivated	CF + Glide coating	A3K Zinc plated bright passivated	Znphr5f black phosphated	Plain no coating	Plain + Glide coating	Plain + Inside silver
Steel	EO-2	Fitting bodies	X						
		Functional nuts		X					
	EO	Fitting bodies	X						
		Nuts		X					
		Progressive stop rings			X				
		Weld fittings				X			
	EO2-FORM	Bodies and nuts from EO are used							
	O-Lok®	Fitting bodies	X						
		Nuts	X						
		Parflange® sleeves	X						
		Brazing sleeves					X		
	Triple-Lok®	Fitting bodies	X						
		Nuts	X						
		Sleeves	X						
Stainless steel	EO-2	Fitting bodies					X		
		Functional nuts up to 12-L/10-S						X	
		Functional nuts from 15-L/12-S							X

			Surface protection/Surface						
Material	Fitting system	Fitting type	CF/Cr3* Zinc plated bright passivated	CF + Glide coating	A3K Zinc plated bright passivated	Znphr5f black phosphated	Plain no coating	Plain + Glide coating	Plain + Inside silver
Stainless steel	EO	Fitting bodies					X		
		Nuts up to 12-L/10-S						X	
		Nuts from 15-L/12-S							X
		Progressive rings				X			
	EO2-FORM	Bodies and nuts from EO are used							
	O-Lok®	Fitting bodies					X		
		Nuts					X		
		Sleeves					X		
	Triple-Lok®	Fitting bodies					X		
		Nuts					X		
		Sleeves					X		
Brass	All systems	Fitting bodies					X		
		Nuts					X		
		Sleeves & ferrules					X		

A3K according to DIN EN ISO 4042 / Znphr5f according to DIN EN ISO 3892 and DIN 50942

O-Lok and Triple-Lok parts are plated Cr3 and conform to FC-F01 specification, 120 hours to white rust, 240 hours to red rust.

Fluid compatibility

Both metal fitting material and elastomeric seal compound have to be selected according to the fluid used.
Standard recommendations for static seals based on experience and sealing compound manufacturers specification. For use of sealing compounds that are used for dynamic seals like rotary fittings or non-return-valves, see note at end of table.

	Fitting material			Sealing material		
Fluid	Steel	Stainless steel	Brass	NBR	FKM	EPDM
Acetone	2	1	1	3	3	1
Acetylene	2	1	3	3	3	2
Air (oil free)	1	1	1	1	1	1
Ammonia liquid	2	1	3	2	3	1
Ammonia gas, cold	1	1	3	1	3	1
Animal oils (Lard oil)	2	2	2	1	1	2
Aral, Vitam BAF	1	1	X	1	1	3
Argon	1	1	1	1	1	1
Asphalt	3	1	3	2	1	3
ASTM-Oil, no. 1	1	1	1	1	1	3
ASTM-Oil, no. 2	1	1	1	1	1	3
ASTM-Oil, no. 3	1	1	1	1	1	3
ASTM-Oil, no. 4	1	1	1	2	1	3
ATF oil	1	1	1	1	1	3
Automotive brake fluid	1	1	1	3	3	1
Benzene	1	1	1	3	1	3
Brine (sodium chloride)	X	2	X	1	1	1
Butane	1	1	3	1	1	3
Carbon bisulphide	1	1	3	3	1	X
Carbon dioxide	1	1	1	1	2	1
Carbon oxide	1	1	1	1	1	1
Castrol, Biotec HVX	1	1	X	1	1	3
Chlorine (dry)	3	1	3	3	1	X
Compressed air	1	1	1	1	1	1
Crude oil	2	1	3	2	1	3

Fluid	Fitting material			Sealing material		
	Steel	Stainless steel	Brass	NBR	FKM	EPDM
Cutting oil	1	1	X	1	3	1
DEA, Econa E22	1	1	X	1	X	3
DEA, Econa E46	1	1	X	1	X	3
Diesel fuel	1	1	1	1	1	3
ECOOL	1	1	X	1	1	X
ESSO, Univis 13	1	1	X	1	1	3
ESSO, Univis 26	1	1	X	1	1	3
ESSO, Univis 32	1	1	X	1	1	3
ESSO, Univis 46	1	1	X	1	1	3
Ethanol (Ethylacohol)	1	1	1	1	3	1
Ether	1	1	1	3	3	2
FINA, Biohydran RS 38	1	1	X	1	1	3
Flue gas	3	1	3	3	2	X
FRAGOL, Hydrolub 125	1	1	X	1	X	3
Freon 11	X	X	1	2	2	3
Freon 12	1	3	1	2	1	3
Freon 22	3	1	1	3	2	3
Gasoline	2	1	1	2	1	3
Gas, liquid propane (LPG)	1	1	1	1	1	3
Glycerine	2	1	2	1	1	1
Glycol (Ethylenglykol)	1	1	2	1	1	1
Heating fuel oil	1	1	1	1	1	3
Helium	1	1	1	1	1	1
Houghton Safe 1120	1	1	X	3	1	1
Houghton Safe 620	1	1	X	1	2	1
Hydrochlorid acid	3	2	3	3	1	2
Hydrogen	3	1	X	3	3	3
Hydrogen peroxide	3	1	3	3	1	2
Hydrolube	1	1	1	1	1	1
Iodine	3	1	3	2	1	2
Kerosene	1	1	1	1	1	3
Lubricating oil SAE 10,20,30,40,50	1	1	1	1	1	3
Methane	1	1	1	1	1	3
Methanol	1	1	1	1	3	1
MIL-F-8192 (JP-9)	1	1	1	3	1	3
MIL-H-5606	1	1	1	1	1	3
MIL-H-6083	1	1	1	1	1	3
MIL-H-7083	1	1	1	1	2	1
MIL-H-8446 (MLO-8515)	1	1	2	2	1	3
MIL-L-2104 & 2104B	1	1	1	1	1	3
MIL-L-7808	2	1	3	2	1	3
Mineral oil	1	1	1	1	1	3
Natural gas	1	1	2	1	1	3
Natural gas, untreated	3	2[1)]	3	3	3	3
Natural mineral oil	1	1	3	2	1	3
Neon	3	1	1	1	1	1
Nitric acid	3	1	3	3	2	3
Nitrogen	1	1	1	1	1	1
Oil	1	1	3	1	1	3
Oxygen (gas, cold)	3	1	2	3	3	3
Ozone	1	1	3	3	1	1
Petrolatum	1	1	1	1	1	3
Petroleum oil	1	1	1	1	1	3
Phosphoric acid	3	3	1	3	1	2
Plantohyd 32 S	1	1	X	1	1	3
Plantohyd 40 N	1	1	X	1	1	3
Propane	1	1	1	1	1	3
R134A	1	1	1	3	3	1

Fluid	Fitting material			Sealing material		
	Steel	Stainless steel	Brass	NBR	FKM	EPDM
Sea Water	3	2	3	1	1	1
SHELL, Naturelle HF-E-46	1	1	X	1	1	3
SHELL, Tellus Oil DO 32	1	1	X	1	1	3
Silicone oil	1	1	X	1	1	1
Skydrol 500	1	1	3	3	3	1
Skydrol 7000	1	1	3	3	2	1
Soap solutions	3	1	3	1	1	1
Steam	2	1	2	3	3	1
Stoddard solvent	1	1	2	1	1	3
Sulphur dioxide	3	1	3	3	3	1
Sulphuric acid	3	2	3	3	1	3
Toluol	1	1	1	3	2	3
Transmission fluid	1	1	1	1	1	3
Trichlorethane	2	1	X	3	1	3
Turpentine	2	1	3	1	1	3
Water	2	1	1[2)]	1	2	1
Xylol	1	1	1	3	1	3

Applicability:
1 = satisfactory
2 = fair
3 = not recommended
X = unsufficiant data

NBR = e.g. Perbunan (registered trademark of Bayer)
FKM

[1)] Untreated natural gas requires stainless steel with reduced material hardness.

[2)] Brass is resistant against crack under normal circumstances. If overloaded (e.g. by overassembly) the resistance especially against ammoniac and nitric derivatives can be negatively influenced. This might cause the defect of the connection.

This fluid compatibility chart is only applicable on so called “static seals”, such as O-rings and profile sealing rings (e.g. ED-seal, DOZ-seal) in tube fitting and flange systems.
For fluid compatibility data of valves, rotary fittings or other multi-function components please review the relevant product pages.

kovaz.cz

Biodegradable oils

Due to environmental concerns and new legislation biodegradable oils are rapidly gaining importance for both mobile and stationary applications. The usage of non-inflammable fluids will remain limited to special applications like mining, steel mills and heavy machines.

Media

Biodegradable oils can be classified into 3 categories:

HEPG (Glycol based fluids)

+ Wide temperature range (–45°C … 100°C)
+ Very stable against ageing
+ NBR and FKM seals are compatible
+ Moderate viscosity change with temperature
+ Water soluble
– Not mixable with mineral oils or HEES, HETG types
– Careful flushing recommended when changing from mineral oil
– Paints can be dissolved
– Care required with material compatibility (e.g. do not use any zinc containing materials)
– Density > 1,100 kg/m^3 possible design changes
– Price?

HETG (Vegetable-based fluids)

+ Mixable with mineral oils
+ Normal sealing material are compatible (e.g. NBR or FKM)
+ Good lubricating properties
+ Paint resistant to fluid
+ Viscosity changes with temperature are moderate
– Limited temperature range (–25° C to +70°C)
– Max. temperature not to be exceeded
– Limited lifetime
– UV and ozone sensitive
– Beware of water take-up (cracking?)
– Price?

HEES (Synthetic ester based fluids)

+ Wide temperature range (–30° C … +90° C or over 100° C with some variants)
+ Good lifetime
+ Mixable with mineral oils
+ Normal sealing materials compatible (FKM and NBR recommended)
+ Machine paints resistant to fluid
+ Viscosity changes with temperature are moderate
+ Good lubricating properties
– Danger of hydrolysis with water take-up (filters, dryer, occlusion)
– Price?

Compatibility

Generally, HPCE steel fittings with standard NBR seals are suitable for most applications.

	–20 °C … 80 °C	80 °C … 120 °C
HEPG Polyalkylenglycol	NBR FKM	Not suitable for Oil
HETG Vegetable Oil	NBR FKM	– FKM
HEES Synthetic ester	NBR FKM	– FKM

Suitable sealing compounds

Experience shows that media compatibility is not a critical issue for static seals used on tube fittings. In doubt please contact HPCE application engineering.

Pragmatic approach

If there is doubt about switching over to softseal fitting systems (ISO6149/Eolastic/O-Lok®/EO-2), it might be a good idea to have a close look on the existing hydraulic system. If NBR seals perform well on hoses, cylinders, valves or filters there is nothing to worry about standard HPCE fittings. Usually the design engineers know when special seal compounds like FKM have to be used.

Novac.cz

C

Flow characteristics

Hydraulic systems are in most cases only rated with a flow velocity defined on the basis of experience. The pressure losses in lines are not taken into account, or measured later on when testing the system. As the pressure losses increase proportionally greater than the flow resistance, it is important to achieve the best rating of the system, that they are already taken into account when planning the tube connections. Calculation is not as difficult as it is often thought, and this chapter is intended to provide a guideline. Besides, it provides information on how excessive pressure losses can be avoided, because pressure losses result in losses in performance and excessive heat. Noise occurs, and possibly cavitation in suction lines.

Medium
All indication given with regard to flow restrictions and to flow properties refer exclusively to liquids. For gaseous media, the variable density of the gas must additionally be taken into account.

Units

c = Flow velocity $\left[\frac{m}{s}\right]$

d = Pipe inside diameter [m]
L = Pipe length [m]
p = Pressure [Pa], 1 bar = 100000 Pa

$\dot{V}$ = Flow rate $\left[\frac{m^3}{s}\right]$, $1\frac{m^3}{s} = 60000\frac{l}{min}$
λ = Pipe friction factor

$\nu(T)$ = Kinematic viscosity of the medium depending on temperature $\left[\frac{m^2}{s}\right]$

$\rho(T)$ = Density of the medium depending on temperature $\left[\frac{kg}{m^3}\right]$

ζ = Individual pressure loss coefficient

Only base units have been used. This has the advantage that the formula do not contain correction factors and there is no danger of confusion, e.g. that values are used with the wrong unit. In case values are given in other units – the flow rate is e.g. often given in l/min – it is advisable to convert them into the base units before starting calculation.

Pressure losses in pipe lines
To calculate pressure losses in pipe lines, it must first be determined whether there is a laminar or a turbulent flow. Laminar flow is homogenous and without turbulence. In case of turbulent flow, the losses increase much more quickly.

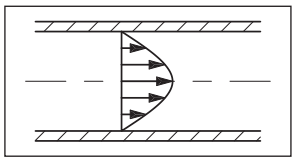
Flow profile with laminar flow

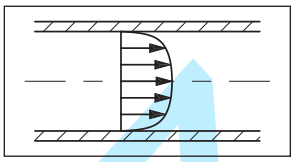
Flow profile with turbulent flow

The kind of flow is defined by the Reynolds' number. With a Reynolds' number of more than 2320, the flow changes to turbulent. The Reynold number is calculated according to the formula:

$$Re = \frac{c \cdot d}{\upsilon(T)}$$

The Reynolds' number is a non-dimensional number. The critical fluid velocity at which the flow regime can change, is thus calculated from:

$$c_{cr} = 2320 \cdot \frac{\upsilon(T)}{d} \left[\frac{m}{s}\right]$$

With a given flow rate, the fluid velocity can be calculated according to the formula:

$$c = \frac{\dot{V} \cdot 4}{d^2 \cdot \pi} \left[\frac{m}{s}\right]$$

Subsequently, the pipe friction factor λ can be calculated. The pipe friction factor λ is a function of the Reynold number and also depends on the roughness of the pipe. As hydraulically smooth pipes can generally be assumed in hydraulic applications, the pipe friction factor λ is calculated according to the following formula:

$$\text{laminar flow, } (Re < 2320): \lambda = \frac{64}{Re}$$

$$\textit{turbulent} \text{ flow, } (Re < 2320): \lambda = \frac{0.3164}{\sqrt[4]{Re}}$$

Finally, if all factors are known, the pressure loss in a certain pipe line can be calculated according to the formula:

$$\Delta p = \lambda \cdot \frac{L}{d} \cdot \frac{\rho(T) \cdot c^2}{2} \text{ [Pa]}$$

Calculation of individual losses
A hydraulic system does not only incorporate pipes, but also valves, fittings, pipe bends etc. that cause flow losses. These individual losses are often much higher than the pipe losses and are calculated according to the following formula:

$$\Delta p = \zeta \cdot \rho(T) \cdot \frac{c^2}{2} \text{ [Pa]}$$

kovaz.cz

The pressure loss coefficient ζ relates to an individual hydraulic component. It covers circulation, impact and separation losses of the flow in a component. In most cases, valve or fitting manufacturers state the pressure loss coefficient of their products. The ζ values are not completely constant. The values increase in the case of very low fluid velocities. The following diagram shows the typical course of the ζ values for a component, depending on the fluid velocity, as it has been determined through a series of tests in the laboratory of the Parker Hannifin GmbH & Co. KG.

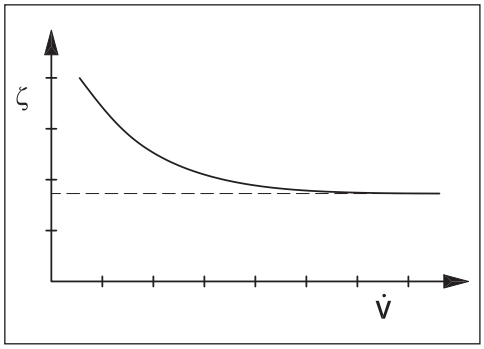

As only the flow resistances at nominal power, i.e. at higher fluid velocities, are generally calculated to rate a hydraulic plant, they may therefore be slight variations for individual sizes.

Straight fittings, e.g. G, GE, EGE, HMTX, F…MTX, F6…MX, HMLO, F…MLO, F6…MLO, …

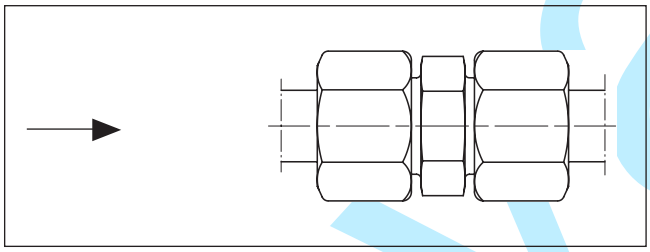

If there is a step change between the bore of the fitting and the inside diameter of the pipe, the conditions applicable to reducers (see below) are valid.
In a normal case, however, the pressure loss is very small, so that it cannot be measured by normal methods.
Literature gives a pressure loss coefficient of 0.01 to 0.05.

Reducers, e.g. RED, GR, TRMTX, TRMLO, …

With reducers, distinction must be made between a cross section increase or reduction. The fluid velocity taken as a basis to calculate the pressure loss is always the velocity at the outlet of the flow.

Extension of the cross section:

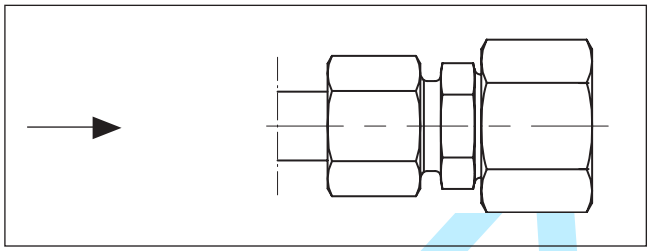

$$\zeta = \left(\frac{A_2}{A_1} - 1 \right)^2$$

With A1 … Inlet cross section area
A2 … Outlet cross section area

The formula stated is valid for a transition angle > 60°, and thus also for EO fittings.
It is difficult to state a figure, as the program of reducers is extensive.
With an RED style of fitting, the pressure loss coefficient ζ can vary between 1.5 and 5000, always referred to the flow velocity at the outlet.

Reduction of the cross section:

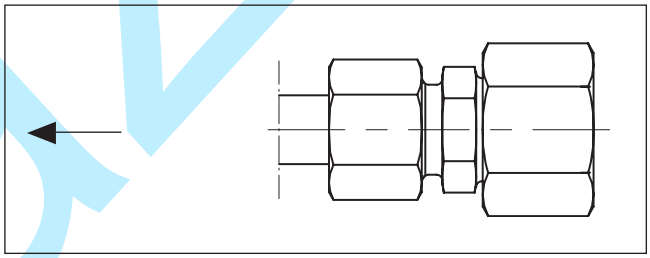

A_2/A_1	0.80	0.60	0.40	0.20
ζ	0.15	0.25	0.35	0.42

Elbow connectors, e.g. W, EW, EMTX, C…MTX, EMLO, C…MLO, …

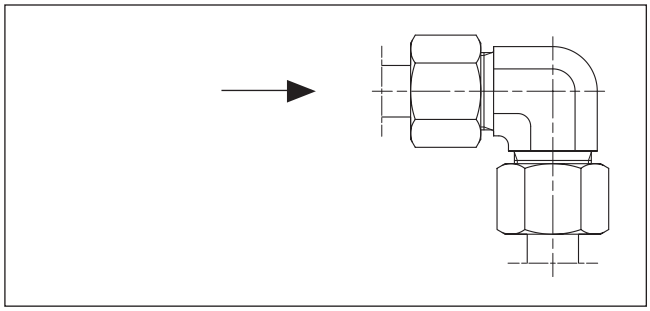

Type	Pressure loss coefficient ζ
W, EMTX, EMLO	1
EW, C…MTX, C…MLO	1

kovaz.cz

C

Tube bends

With pipe bends, the pressure loss coefficient results from the ratio of bend radius to inside diameter (R/d).

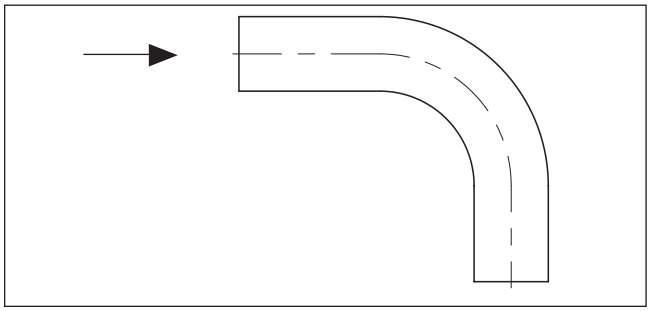

Bend radius/Inside diameter	Pressure loss coefficient ζ
2	0.21
4	0.14
6 and more	0.11

Banjo fittings

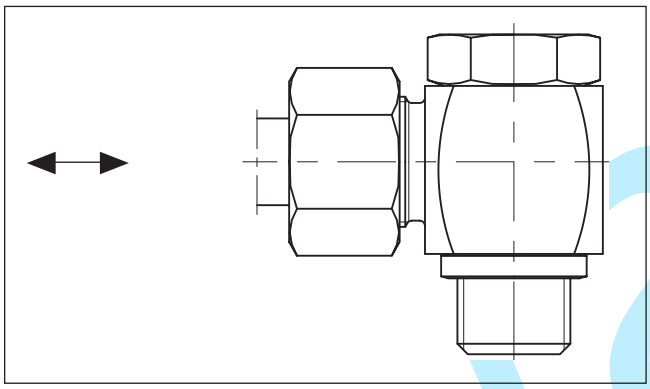

Type	Pressure loss coefficient ζ
WH	3 … 6
SWVE	6 … 9
DSVW	approx. 4

With WH and SWVE, the pressure loss depends on the position of the banjo bolt cross hole drilling to the tube connection aperture. The pressure loss coefficient is therefore given as a range.

Manifolds and Tee/Cross fittings

The pressure loss coefficient depends on whether the medium is divided or flows together, and in what ratio the medium is divided.
Index a: The medium flows straight through the manifold.
Index b: The medium flows through the cross branch of the manifold.

Flow division (to/from T branch)	Pressure loss coefficient ζ in case of pipe branching		Pressure loss coefficient ζ in case of pipe junction	
$\dot{V}_b / \dot{V}$	ζ_a	ζ_b	ζ_a	ζ_b
0.6	0.07	0.95	0.40	0.47
0.8	0.20	1.10	0.50	0.73
1.0	0.35	1.30	0.60	0.92

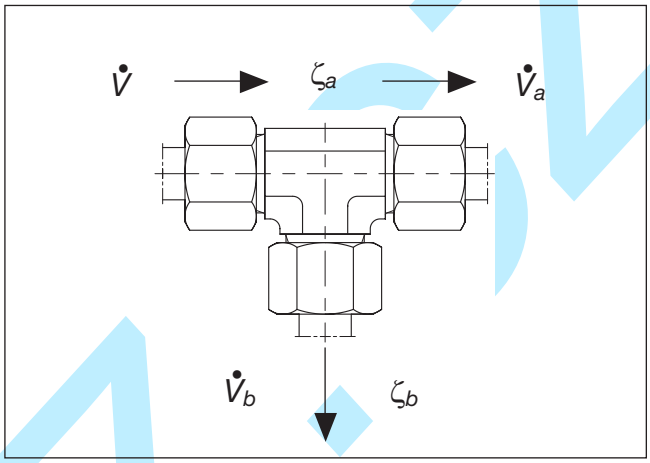

Pipe branching

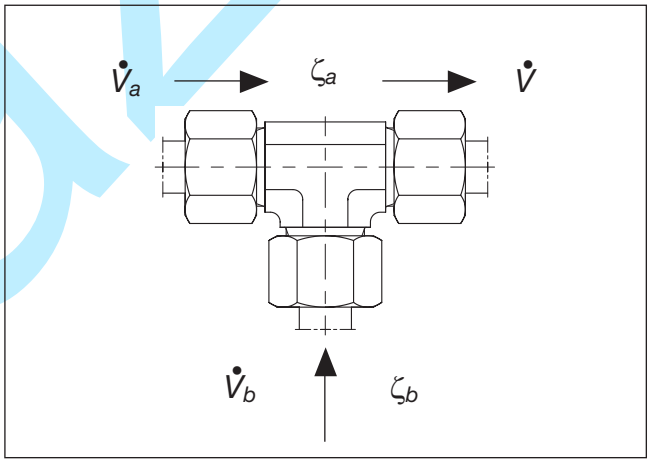

Pipe junction

Kovaz

Valves, e.g. RHD, DV, VDHA, …

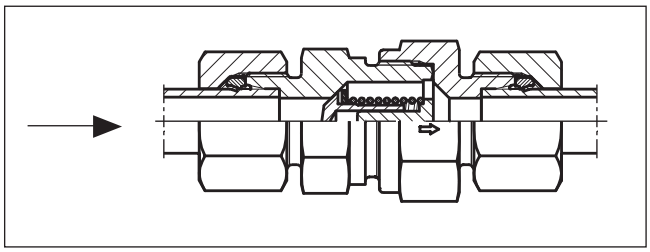

Type	Pressure loss coefficient ζ
RH …	5.0
DV	5.5
LD	4.0
VDHA	5.0
VDHB	5.5

The pressure loss coefficient stated is always valid for the fully opened valve.

Calculation of the pressure loss Δ*p* – example a WH 16-SR/CF (Banjo fitting).

The pressure loss Δ*p* is calculated according to the following formula:

$$\Delta p = \zeta \cdot \rho(T) \cdot \frac{c^2}{2} \text{ [Pa]}$$

To calculate pressure loss at a flow rate of 20 l/min is to be calculated.

The following values are known:

Pipe inside diameter d = 12 mm = 0.012 m
Density of the medium ρ = 869; 4 kg/m³
(Oil manufacturer's data sheet)
Pressure loss coefficient ζ = 4.5
(Average value for WH fittings)

$$\text{Flow rate } \dot{V} = \left[\frac{20}{60000}\right] = 0.000333 \left[\frac{m^3}{s}\right]$$

$$\text{Fluid velocity } c = \frac{\dot{V} \cdot 4}{d_2 \cdot \pi} = \frac{0.000333 \cdot 4}{0.012^2 \cdot \pi} = 2.95 \left[\frac{m}{s}\right]$$

The thus resulting flow loss is then:

$$\Delta p = 4.5 \cdot 869.4 \cdot \frac{2.95^2}{2} = 17000 \text{ [Pa]} = 0.17 \text{ [bar]}$$

kovaz.cz

Flow diameter and wall thickness

Determining tube size for hydraulic systems

Proper tube material, type and size for a given application and type of fitting is critical for efficient and trouble free operation of the fluid system. Selection of proper tubing involves choosing the right tube material, and determining the optimum tube size (O.D. and wall thickness).

Proper sizing of the tube for various parts of a hydraulic system results in an optimum combination of efficient and cost effective performance.

A tube that is too small causes high fluid velocity, which has many detrimental effects. In pressure lines, it causes high friction losses and turbulence, both resulting in high pressure drops and heat generation. High heat accelerates wear in moving parts and rapid aging of seals and hoses, all resulting in reduced component life. High heat generation also means wasted energy, and hence, low efficiency.

Too large tubes increase system cost. Thus, optimum tube sizing is very critical. The following is a simple procedure for sizing the tubes.

Determine required flow diameter

Use table to determine recommended flow diameter for the required flow rate and type of line.
The table is based on the following recommended flow velocities:

$$\text{Pressure lines} - 3 \rightarrow 5 \left[\frac{m}{s}\right]$$

$$\text{Return lines} - 2 \rightarrow 4 \left[\frac{m}{s}\right]$$

$$\text{Suction lines} - 1 \left[\frac{m}{s}\right]$$

Avoid flow rates > 8 m/s! The resulting forces are high and can destroy the tube lines.

If you desire to use different velocities than the above, use one of the following formula to determine the required flow diameter.

$$\text{Tube}-\text{I.D. [mm]} = 4.61 * \sqrt{\frac{\text{Flow}\left[\frac{\text{ltr.}}{\text{min}}\right]}{\text{Velocity}\left[\frac{m}{s}\right]}}$$

Determine required wall thickness

Use 2nd table to determine recommended wall thickness for the required working pressure and flow diameter of the line. Therefore choose an working pressure which is equal or higher than the required working pressure.

For other tubes and tube materials you have to calculate the wall thickness and working pressure acc. to the formula shown in the tube chapter.

Maximum flow l/min	Flow diameter in millimeters		
	5 m/s Pressure lines	3 m/s Return lines	1 m/s Suction lines
1	2.1	2.7	4.6
2	2.9	3.8	6.5
3	3.6	4.6	8.0
4	4.1	5.3	9.2
5	4.6	6.0	10.3
6	5.1	6.5	11.3
7	5.5	7.0	12.2
8	5.8	7.5	13.0
9	6.2	8.0	13.8
10	6.5	8.4	14.6
12	7.1	9.2	16.0
14	7.7	10.0	17.2
16	8.2	10.6	18.4
18	8.7	11.3	19.6
20	9.2	11.9	20.6
22	9.7	12.5	21.6
24	10.1	13.0	22.6
26	10.5	13.6	23.5
28	10.9	14.1	24.4
30	11.3	14.6	25.3
32	11.7	15.1	26.1
34	12.0	15.5	26.9
36	12.4	16.0	27.7
38	12.7	16.4	28.4
40	13.0	16.8	29.2
45	13.8	17.9	30.9
50	14.6	18.8	32.6
55	15.3	19.7	34.2
60	16.0	20.6	35.7
65	16.6	21.5	37.2
70	17.2	22.3	38.6
75	17.9	23.1	39.9
80	18.4	23.8	41.2
85	19.0	24.5	42.5
90	19.6	25.3	43.7
95	20.1	25.9	44.9
100	20.6	26.6	46.1
110	21.6	27.9	48.4
120	22.6	29.2	50.5
130	23.5	30.3	52.6
140	24.4	31.5	54.5
150	25.3	32.6	56.5
160	26.1	33.7	58.3
170	26.9	34.7	60.1
180	27.7	35.7	61.8
190	28.4	36.7	63.5
200	29.2	37.6	65.2
220	30.6	39.5	68.4
240	31.9	41.2	71.4
260	33.2	42.9	74.3
280	34.5	44.5	77.1
300	35.7	46.1	79.8
320	36.9	57.6	82.5
340	38.0	49.1	85.0
360	39.1	50.5	87.5
380	40.2	51.9	89.9
400	41.2	53.2	92.2
450	43.7	56.5	97.8
500	46.1	59.5	103.1

kovaz.cz

For your notes

Dom Technologiz
kovaz.cz

Dimensioning

Index

Overview EO 24° cone connections D3

Not recommended D4

EO 24° cone end
(DIN 3861/ISO 8434-1)/dimension D4

EO 24°-DKO swivel connector
(DIN 3865/DIN EN ISO 8434-1/-4)/dimensions D5

Overview O-Lok® connections D6–D7

O-Lok® end
(ISO 8434-3/SAE J1453)/dimensions D8

O-Lok® swivel connector
(ISO 8434-3/SAE J1453)/dimensions D9

Overview Triple-Lok® connections D10–D11

Triple-Lok® end
(ISO 8434-2/SAE J514)/dimensions D12

Triple-Lok® swivel connector
(ISO 8434-3/SAE J514)/dimensions D13

DIN 60° cone end (DIN 7631)/dimensions D14

Adapter 60° cone end (ISO/DIS 8434-6)/dimensions D15

NPSM Swivel adapters (SAE J516)/dimensions D16

Port end dimensions for tube fittings D17–D19

kovaz.cz

Overview EO 24° cone connections

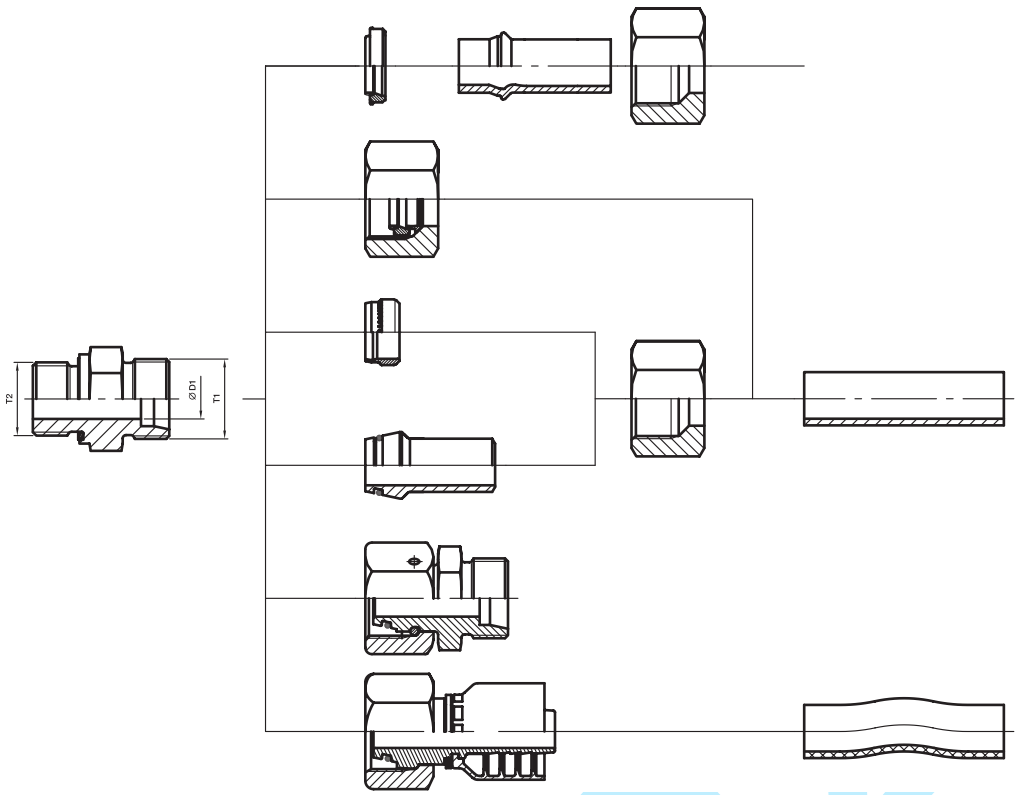

Size	D1 Tube O.D. mm	T1 Thread metric	Thread O.D. mm	T2 Port thread BSPP	metric	BSPT (short)	metric tapered	
LL	04	M 08×1.0	8.0	G 1/8 A	M 08×1.0	R 1/8 tap.	M 08×1.0 tap.	
	05	M 10×1.0	10.0	G 1/8 A	M 08×1.0			
	06	M 10×1.0	10.0	G 1/8 A	M 10×1.0	R 1/8 tap.	M 10×1.0 tap.	
	08	M 12×1.0	12.0	G 1/8 A	M 10×1.0	R 1/8 tap.	M 10×1.0 tap.	
	10	M 14×1.0	14.0	G 1/4 A		R 1/4 tap.		
	12	M 16×1.0	16.0	G 1/4 A		R 1/4 tap.		
L	06	M 12×1.5	12.0	G 1/8 A	M 10×1.0		M 10×1.0 tap.	1CAxx-6-yy
	08	M 14×1.5	14.0	G 1/4 A	M 12×1.5		M 12×1.5 tap.	1CAxx-8-yy
	10	M 16×1.5	16.0	G 1/4 A	M 14×1.5		M 14×1.5 tap.	1CAxx-10-yy
	12	M 18×1.5	18.0	G 3/8 A	M 16×1.5		M 16×1.5 tap.	1CAxx-12-yy
	15	M 22×1.5	22.0	G 1/2 A	M 18×1.5		M 18×1.5 tap.	1CAxx-15-yy
	18	M 26×1.5	26.0	G 1/2 A	M 22×1.5		M 22×1.5 tap.	1CAxx-18-yy
	22	M 30×2.0	30.0	G 3/4 A	M 26×1.5		M 26×1.5 tap.	1CAxx-22-yy
	28	M 36×2.0	36.0	G 1 A	M 33×2.0			1CAxx-28-yy
	35	M 45×2.0	45.0	G 1 1/4 A	M 42×2.0			1CAxx-35-yy
	42	M 52×2.0	52.0	G 1 1/2 A	M 48×2.0			1CAxx-42-yy
S	06	M 14×1.5	14.0	G 1/4 A	M 12×1.5		M 12×1.5 tap.	1C9xx-6-yy
	08	M 16×1.5	16.0	G 1/4 A	M 14×1.5		M 14×1.5 tap.	1C9xx-8-yy
	10	M 18×1.5	18.0	G 3/8 A	M 16×1.5		M 16×1.5 tap.	1C9xx-10-yy
	12	M 20×1.5	20.0	G 3/8 A	M 18×1.5		M 18×1.5 tap.	1C9xx-12-yy
	14	M 22×1.5	22.0	G 1/2 A	M 20×1.5		M 20×1.5 tap.	1C9xx-14-yy
	16	M 24×1.5	24.0	G 1/2 A	M 22×1.5		M 22×1.5 tap.	1C9xx-16-yy
	20	M 30×2.0	30.0	G 3/4 A	M 27×2.0			1C9xx-20-yy
	25	M 36×2.0	36.0	G 1 A	M 33×2.0			1C9xx-25-yy
	30	M 42×2.0	45.0	G 1 1/4 A	M 42×2.0			1C9xx-30-yy
	38	M 52×2.0	52.0	G 1 1/2 A	M 48×2.0			1C9xx-38-yy

xx – Fitting Series • yy – Hose Size
From Parker hose fitting (HPDE and PFDE)

Index

Not recommended

	Reason
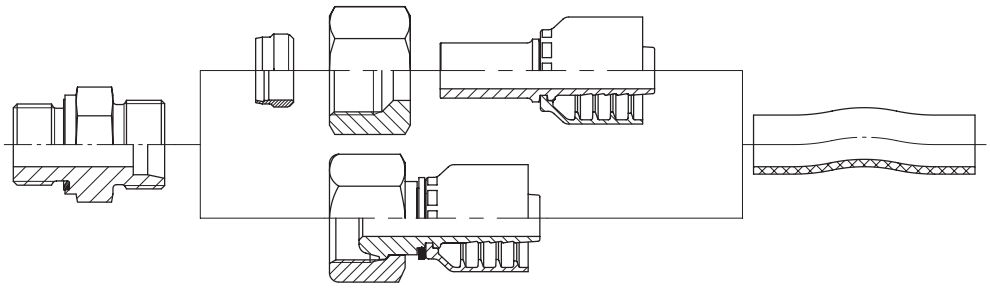	High risk of hose blow off. For ferrule assembly special hardened tools are required.
	With the use of the Universal-connection high risk of cracks in 24° cone area of stud ends sizes 6-L up to 18-L.

EO 24° cone end (DIN 3861/ISO 8434-1)/dimension

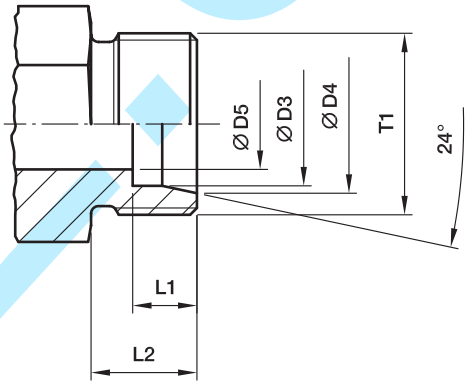

Tube O.D. Size	T1	Ø D3 mm	Ø D4 mm	Ø D5 mm	L1 mm	L2 mm
04-LL	M 08×1.0	04	5.0	3.0	4.1	8
06-LL	M 10×1.0	06	7.5	4.5	5.6	8
08-LL	M 12×1.0	08	9.5	6.0	5.6	9
10-LL	M 14×1.0	10	11.5	8.0	5.6	9
12-LL	M 16×1.0	12	13.5	10.0	6.1	9
06-L	M 12×1.5	06	8.1	4.0	7.1	10
08-L	M 14×1.5	08	10.1	6.0	7.1	10
10-L	M 16×1.5	10	12.3	8.0	7.1	11
12-L	M 18×1.5	12	14.3	10.0	7.1	11
15-L	M 22×1.5	15	17.3	12.0	7.1	12
18-L	M 26×1.5	18	20.3	15.0	7.6	12
22-L	M 30×2.0	22	24.3	19.0	7.6	14
28-L	M 36×2.0	28	30.3	24.0	7.6	14
35-L	M 45×2.0	35	38.0	30.0	10.6	16
42-L	M 52×2.0	42	45.0	36.0	11.1	16
06-S	M 14×1,5	06	8.1	4.0	7.1	12
08-S	M 16×1.5	08	10.1	5.0	7.1	12
10-S	M 18×1.5	10	12.3	7.0	7.6	12
12-S	M 20×1.5	12	14.3	8.0	7.6	12
14-S	M 22×1.5	14	16.3	10.0	8.1	14
16-S	M 24×1.5	16	18.3	12.0	8.6	14
20-S	M 30×2.0	20	22.9	16.0	10.6	16
25-S	M 36×2.0	25	27.9	20.0	12.1	18
30-S	M 42×2.0	30	33.0	25.0	13.6	20
38-S	M 52×2.0	38	41.0	32.0	16.1	22

EO 24°-DKO swivel connector (DIN 3865/DIN EN ISO 8434-4)/dimensions

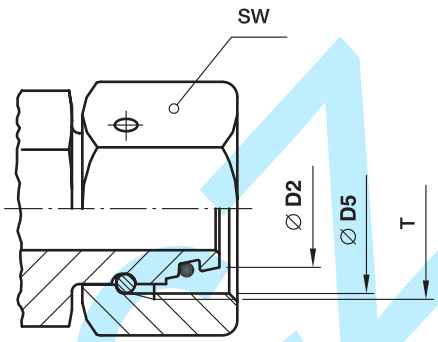

Tube O.D. Size	T	Ø D2 mm	Ø D5 mm Thread core diameter	SW mm
06-L	M 12×1.5	5.5	10.38	14
08-L	M 14×1.5	7.5	12.38	17
10-L	M 16×1.5	9.7	14.38	19
12-L	M 18×1.5	11.7	16.38	22
15-L	M 22×1.5	14.7	20.38	27
18-L	M 26×1.5	17.7	24.38	32
22-L	M 30×2.0	21.7	27.84	36
28-L	M 36×2.0	27.7	33.84	41
35-L	M 45×2.0	34.5	42.84	50
42-L	M 52×2.0	41.5	49.84	60
06-S	M 14×1.5	5.5	12.38	17
08-S	M 16×1.5	7.5	14.38	19
10-S	M 18×1.5	9.7	16.38	22
12-S	M 20×1.5	11.7	18.38	24
14-S	M 22×1.5	13.5	20.38	27
16-S	M 24×1.5	15.5	22.38	30
20-S	M 30×2.0	19.5	29.84	36
25-S	M 36×2.0	24.5	33.84	46
30-S	M 42×2.0	29.5	39.84	50
38-S	M 52×2.0	37.5	49.84	60

Kovaz.cz

Index

Overview O-Lok® connections

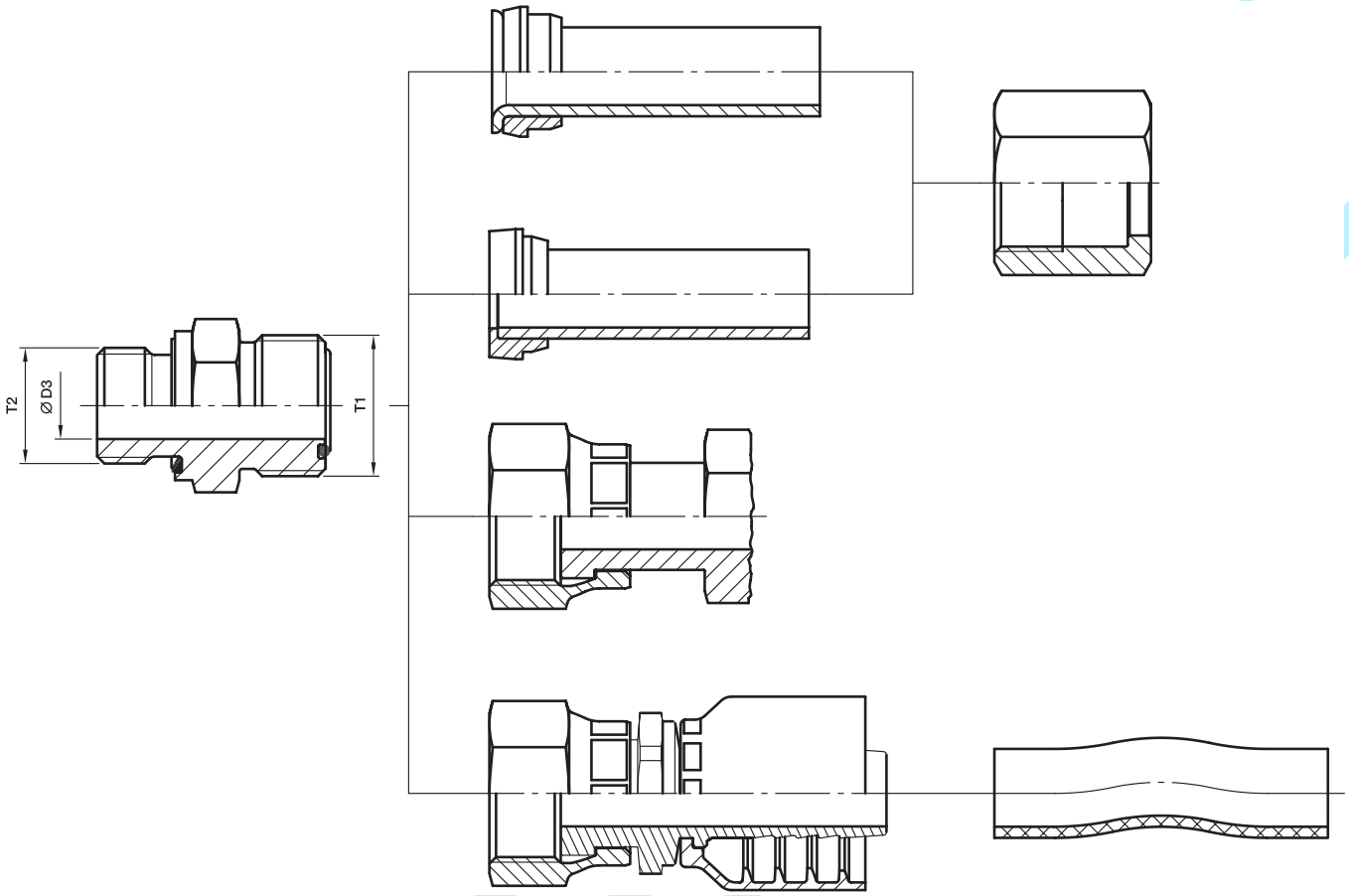

KOVC

Overview O-Lok® connections

Size	Tube: Metric tube O.D. mm	Tube: Metric tube max. Wall thickness mm	Tube: Inch tube O.D. inch	Tube: Inch tube max. Wall thickness inch	T1 Thread UN/UNF	Ø D3 Bore diameter mm	T2 Port thread: BSPP	T2 Port thread: UN/UNF	T2 Port thread: NPTF	T2 Port thread: metric	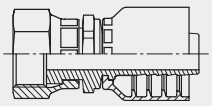
4	6	1.5	1/4	0.065		4.0	G 1/8 A	7/16-20	1/8	M 12×1.5	
4-4	6	1.5	1/4	0.065		4.5	G 1/4 A		1/4		1JCxx-4-yy
4-6	6	1.5	1/4	0.065	9/16-18	4.5	G 3/8 A	9/16-18	3/8		
4-8	6	1.5	1/4	0.065		4.5	G 1/2 A	3/4-16			
6	8	2.0	5/16	0.095	11/16-16	6.5	G 1/4 A	9/16-18	1/4	M 16×1.5	
6	10	2.0	3/8	0.095		6.5	G 1/4 A	9/16-18	1/4	M 16×1.5	
6-2	10	2.0	3/8	0.095		4.5	G 1/8 A				
6-4	10	2.0	3/8	0.095		4.5		7/16-20			1JCxx-6-yy
6-6	10	2.0	3/8	0.095	11/16-16	6.5	G 3/8 A		3/8		
6-8	10	2.0	3/8	0.095		6.5	G 1/2 A	3/4-16	1/2		
6-10	10	2.0	3/8	0.095		6.5		7/8-14			
6-12	10	2.0	3/8	0.095		6.5	G 3/4 A				
8	12	3.0	1/2	0.095		9.5	G 3/8 A	3/4-16	3/8	M 18×1.5	1JCxx-8-yy
8-4	12	3.0	1/2	0.095		7.5	G 1/4 A				
8-6	12	3.0	1/2	0.095		9.5		9/16-18			
8-8	12	3.0	1/2	0.095	13/16-16	9.5	G 1/2 A	1/2-20			
8-10	12	3.0	1/2	0.095		9.5		7/8-14			
8-12	12	3.0	1/2	0.095		9.5	G 3/4 A	1 1/16-12	3/4		
8-16	12	3.0	1/2	0.095		9.5		1 5/16-12			
10	14	2.5			1-14	12.5	G 1/2 A	7/8-14	1/2	M 22×1.5	
10	15	2.5			1-14	12.5	G 1/2 A	7/8-14	1/2	M 22×1.5	
10	16	3.0	5/8	0.120		12.5	G 1/2 A	7/8-14	1/2	M 22×1.5	
10-6	16	3.0	5/8	0.120		10.0	G 3/8 A				1JCxx-10-yy
10-8	16	3.0	5/8	0.120	1-14	9.5		3/4-16			
10-12	16	3.0	5/8	0.120		12.5	G 3/4 A	1 1/16-12	3/4		
10-16	16	3.0	5/8	0.120		12.5	G 1 A				
12	18	3.0			1 3/16-12	15.5	G 3/4 A	1 1/16-12	3/4	M 27×2.0	
12	20	3.5	3/4	0.156		15.5	G 3/4 A	1 1/16-12	3/4	M 27×2.0	
12-8	20	3.5	3/4	0.156		9.5	G 1/2 A	3/4-16	1/2		
12-10	20	3.5	3/4	0.156	1 3/16-12	12.5		7/8-14			1JCxx-20-yy
12-16	20	3.5	3/4	0.156		12.5	G 1 A	1 5/16-12	1		
12-20	20	3.5	3/4	0.156		12.5	G 1 1/4 A				
16	22	4.0			1 7/16-12	20.5	G 1 A	1 5/16-12	1	M 33×2.0	
16	25	4.0	1	0.188		20.5	G 1 A	1 5/16-12	1	M 33×2.0	
16-12	25	4.0	1	0.188		15.5	G 3/4 A	1 1/16-12	3/4		1JCxx-16-yy
16-20	25	4.0	1	0.188	1 7/16-12	20.5	G 1 1/4 A	1 5/8-12			
16-24	25	4.0	1	0.188		20.5	G 1 1/2 A				
20	28	4.0			1 11/16-12	26.0	G 1 1/4 A	1 5/8-12	1 1/4	M 42×2.0	
20	30	4.0			1 11/16-12	26.0	G 1 1/4 A	1 5/8-12	1 1/4	M 42×2.0	
20	32	4.0	1 1/4	0.188		26.0	G 1 1/4 A	1 5/8-12	1 1/4	M 42×2.0	1JCxx-20-yy
20-16	32	4.0	1 1/4	0.188	1 11/16-12	21.5	G 1 A	1 5/16-12			
20-24	32	4.0	1 1/4	0.188		26.0	G 1 1/2 A	1 7/8-12			
24	35	4.0			2-12	32.0	G 1 1/2 A	1 7/8-12	1 1/2	M 48×2.0	
24	38	5.0	1 1/2	0.220	2-12	32.0	G 1 1/2 A	1 7/8-12	1 1/2	M 48×2.0	1JCxx-24-yy
24-20	38	5.0	1 1/2	0.220		27.5	G 1 1/4 A	1 5/8-12			
32	50	3.0	2	0.120	2 1/2-12	45.0	G 2 A	2 1/2-12		M 60×2.0	—

xx – Fitting Series • yy – Hose Size
From Parker hose fitting (HPDE and PFDE)

Index

O-Lok® end (ISO 8434-3/SAE J1453)/dimensions

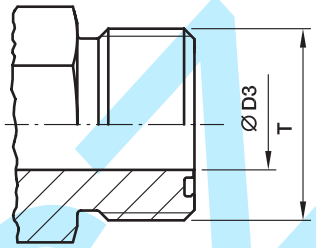

Ø D5	Tube O.D.		T	T	
Size	inch	mm	UN/UNF	Major thread Ø mm	Ø D3 mm
4	1/4	6	9/16-18	14.0	5.0
6	5/16, 3/8	8, 10	11/16-16	17.0	6.5
8	1/2	12	13/16-16	20.5	9.5
10	5/8	14, 15, 16	1-14	25.0	12.5
12	3/4	18, 20	1 3/16-12	30.0	15.5
16	7/8, 1	22, 25	1 7/16-12	36.0	20.5
20	1 1/4	28, 30, 32	1 11/16-12	42.5	26.0
24	1 1/2	35, 38	2-12	50.5	32.0
32	2	50	2 1/2-12	63.0	45.0

All dimensions shown are nominal for identification only.
Small deviations may be found between SAE J1453 or ISO 8434-3 on bore sizes.

kovaz.cz

O-Lok® swivel connector (ISO 8434-3/SAE J1453)/dimensions

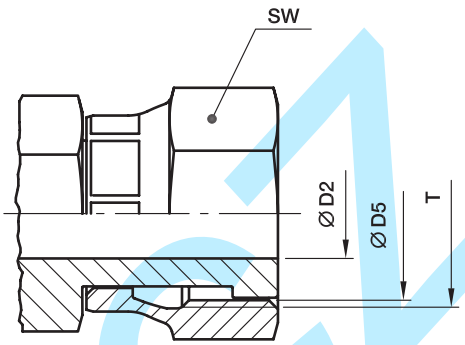

Size	Tube O.D. inch	Tube O.D. mm	T UN/UNF	Ø D5 Thread core diameter mm	SW mm	Ø D2 mm
4	1/4	6	9/16-18	12.5	17	4.0
6	5/16, 3/8	8, 10	11/16-16	16.0	22	6.5
8	1/2	12	13/16-16	19.0	24	9.0
10	5/8	14, 15, 16	1-14	23.0	30	11.5
12	3/4	18, 20	1 3/16-12	28.0	36	14.0
16	7/8, 1	22, 25	1 7/16-12	34.0	41	20.0
20	1 1/4	28, 30, 32	1 11/16-12	40.5	50	26.0
24	1 1/2	35, 38	2-12	48.0	60	32.0

All dimensions shown are nominal for identification only.
Small deviations may be found between SAE J1453 or ISO 8434-3 on bore sizes.

kovaz.cz

Index

Overview Triple-Lok® connections

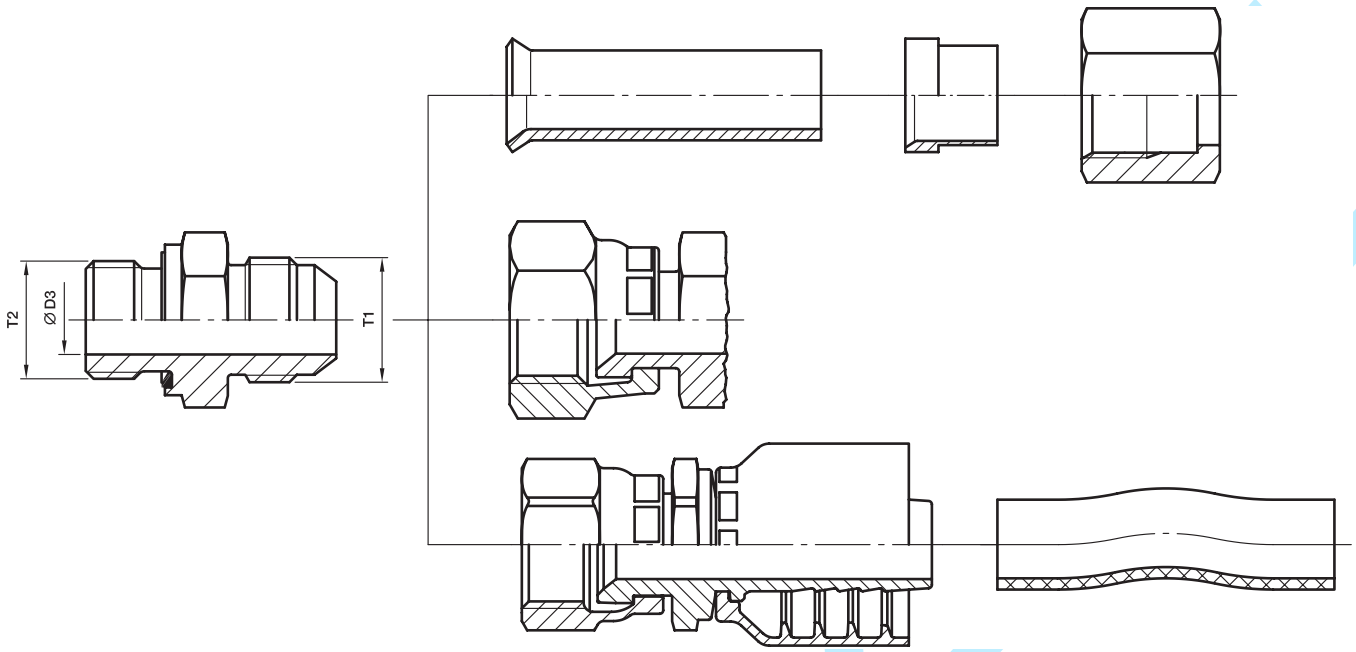

kovaz

Overview Triple-Lok® connections

Size	Tube: Metric tube O.D. mm	Tube: Metric tube max. Wall thickness mm	Tube: Inch tube O.D. inch	Tube: Inch tube max. Wall thickness inch	T1 Thread UN/UNF	Ø D3 Bore diameter mm	T2 Port thread: BSPP (BSPT, NPTF)	T2 Port thread: UN/UNF	T2 Port thread: metric	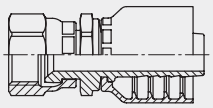
4	6	1.5	1/4	0.065		4.5	G 1/8 A	7/16-20	M 10×1.0	
4-4	6	1.5	1/4	0.065		4.5	G 1/4 A			
4-5	6	1.5	1/4	0.065	7/16-20	4.5		1/2-20		168xx-4-yy
4-6	6	1.5	1/4	0.065		4.5	G 3/8 A	9/16-18		
4-8	6	1.5	1/4	0.065		4.5	G 1/2 A			
5	8	1.5	5/16	0.065		6.0	G 1/8 A	1/2-20	M 12×1.5	
5-4	8	1.5	5/16	0.065		6.0	G 1/4 A			168xx-5-yy
5-6	8	1.5	5/16	0.065	1/2-20	6.0	G 3/8 A			
5-8	8	1.5	5/16	0.065		6.0	G 1/2 A			
6-2	10	1.5	3/8	0.065		7.5	G 1/8 A			
6	10	1.5	3/8	0.065		7.5	G 1/4 A	9/16-18	M 14×1.5	106xx-6-yy
6-6	10	1.5	3/8	0.065	9/16-18	7.5	G 3/8 A			
6-8	10	1.5	3/8	0.065		7.5	G 1/2 A	3/4-16		
8-4	12	2.0	1/2	0.083		10.0	G 1/4 A			
8	12	2.0	1/2	0.083		10.0	G 3/8 A	3/4-16	M 16×1.5	
8-8	12	2.0	1/2	0.083	3/4-16	10.0	G 1/2 A		M 18×1.5	168xx-8-yy
8-10	12	2.0	1/2	0.083		10.0		7/8-14		
8-12	12	2.0	1/2	0.083		10.0	G 3/4 A	1 1/16-12		
10-6	14, 15, 16	2.5	5/8	0.095		12.5	G 3/8 A			
10-8	14, 15, 16	2.5	5/8	0.095		12.5		3/4-16		168xx-10-yy
10	14, 15, 16	2.5	5/8	0.095	7/8-14	12.5	G 1/2 A	7/8-14	M 18×1.5	
10-12	14, 15, 16	2.5	5/8	0.095		12.5	G 3/4 A	1 1/16-12	M 22×1.5	
12-8	18, 20	3.0	3/4	0.109		15.5	G 1/2 A	3/4-16		
12-10	18, 20	3.0	3/4	0.109		15.5		7/8-14	M 22×1.5	106xx-12-yy
12	18, 20	3.0	3/4	0.109	1 1/16-12	15.5	G 3/4 A	1 1/16-12	M 27×2.0	
12-16	18, 20	3.0	3/4	0.109		15.5	G 1 A	1 5/16-12		
14	22	3.0	7/8	0.109	1 3/16-12	18.0	G 3/4 A	1 3/16-12	M 27×2.0	–
14-16	22	3.0	7/8	0.109		18.0	G 1 A	1 5/16-12		
16-12	25	3.0	1	0.120		21.5	G 3/4 A	1 1/16-12		
16	25	3.0	1	0.120	1 5/16-12	21.5	G 1 A	1 5/16-12	M 33×2.0	106xx-16-yy
16-20	25	3.0	1	0.120		21.5	G 1 1/4 A	1 5/8-12		
20-12	28, 30, 32	3.0	1 1/4	0.120		27.5	G 3/4 A			
20-16	28, 30, 32	3.0	1 1/4	0.120	1 5/8-12	27.5	G 1 A			106xx-20-yy
20	28, 30, 32	3.0	1 1/4	0.120		27.5	G 1 1/4 A	1 5/8-12	M 42×2.0	
24-20	35, 38	4.0	1 1/2	0.120	1 7/8-12	33.0	G 1 1/4 A			106xx-24-yy
24	35, 38	4.0	1 1/2	0.120		33.0	G 1 1/2 A	1 7/8-12	M 48×2.0	
28-24	42	3.0			2 1/4-12	39.0	G 1 1/2 A			–
32	50	3.5	2	0.134	2 1/2-12	45.0	G 2 A	2 1/2-12		106xx-32-yy

xx – Fitting Series • yy – Hose Size
From Parker hose fitting (HPDE and PFDE)

Kovaz.cz

Index

Triple-Lok® end (ISO 8434-2/SAE J514)/dimensions

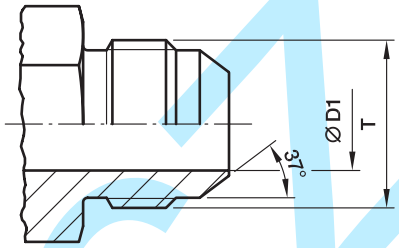

Size	Tube O.D. inch	Tube O.D. mm	T UN/UNF	T Major thread Ø mm	Ø D1 mm
4	1/4	6	7/16-20	11.0	4.5
5	5/16	8	1/2-20	12.5	6.0
6	3/8	10	9/16-18	14.0	7.5
8	1/2	12	3/4-16	19.0	10.0
10	5/8	14, 15, 16	7/8-14	22.0	12.5
12	3/4	18, 20	1 1/16-12	27.0	15.5
14	7/8	22	1 3/16-12	30.0	18.0
16	1	25	1 5/16-12	33.0	21.5
20	1 1/4	28, 30, 32	1 5/8-12	41.0	27.5
24	1 1/2	35, 38	1 7/8-12	47.5	33.0
28*	1 3/4	42	2 1/4-12	57.0	39.0
32	2	–	2 1/2-12	63.5	45.0

*Size 28 is not part of SAE J514 or ISO 8434-2.

All dimensions shown are nominal for identification only.
Small deviations may be found between SAE J514 or ISO 8434-2 on bore sizes.

Suitable Flare

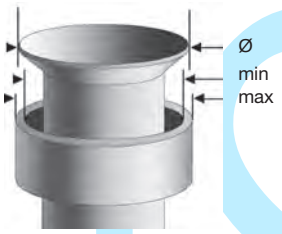

Tube O.D. mm	Tube O.D. inch	Ø D Min.	Ø D Max.
6	1/4″	8.6	9.7
8	5/16″	10.2	11.3
10	3/8″	11.7	12.7
12	1/2″	16.0	17.3
14		19.3	20.2
15		19.3	20.2
16	5/8″	19.3	20.2
18		23.4	24.7
20	3/4″	23.4	24.7
22	7/8″	26.5	27.8
25	1″	29.7	31.0
28		37.6	38.9
30		37.6	38.9
32	1 1/4″	37.6	38.9
35		43.2	45.3
38	1 1/2″	43.2	45.3
42		52.0	54.8
	2″	59.2	61.2

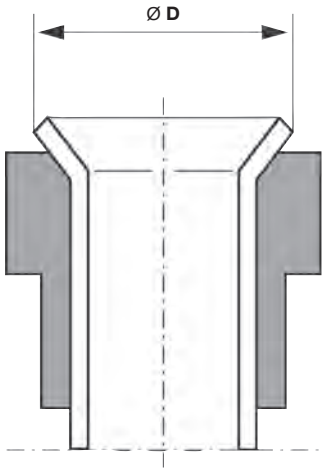

Triple-Lok® swivel connector (ISO 8434-2/SAE J514)/dimensions

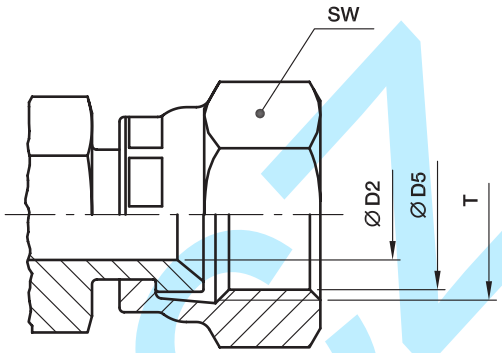

Size	Tube O.D. inch	Tube O.D. mm	T UN/UNF	SW mm	Ø D5 Thread core diameter mm	Ø D2 mm
4	1/4	6	7/16-20	17	10.0	4.4
5	5/16	8	1/2-20	17	11.5	6.0
6	3/8	10	9/16-18	19	13.0	7.5
8	1/2	12	3/4-16	22	17.5	9.9
10	5/8	14, 15, 16	7/8-14	27	20.5	12.3
12	3/4	18, 20	1 1/16-12	32	25.0	15.5
14	7/8	22	1 3/16-12	35	28.0	18.0
16	1	25	1 5/16-12	38	31.0	21.5
20	1 1/4	28, 30, 32	1 5/8-12	50	39.0	27.5
24	1 1/2	35. 38	1 7/8-12	60	45.5	33.0
32	2	–	2 1/2-12	75	61.5	45.0

All dimensions shown are nominal for identification only.
Small deviations may be found between SAE J514 or ISO 8434-2 on bore sizes.

Kovalent

Index

DIN 60° cone end (DIN 7631)/dimensions

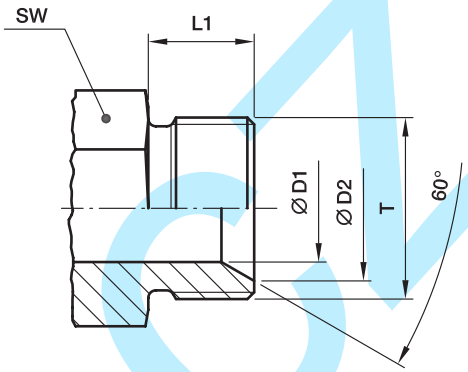

Tube O.D. mm	T	Ø D1 mm	Ø D2 mm	L1 mm	SW mm
4–5	M 10×1.5	3	8.0	8	11
06	M 12×1.5	4	9.0	10	12
08	M 14×1.5	6	11.0	10	14
10	M 16×1.5	8	13.0	11	17
12	M 18×1.5	10	15.0	11	19
15	M 22×1.5	12	19.0	12	24
18	M 26×1.5	15	22.0	12	27
22	M 30×1.5	19	26.0	14	32
28	M 38×1.5	25	33.0	14	41
35	M 45×1.5	32	40.0	16	46
42	M 52×1.5	39	47.0	16	55

Kovat 67

Adapter 60° cone end (ISO/DIS 8434-6)/dimensions

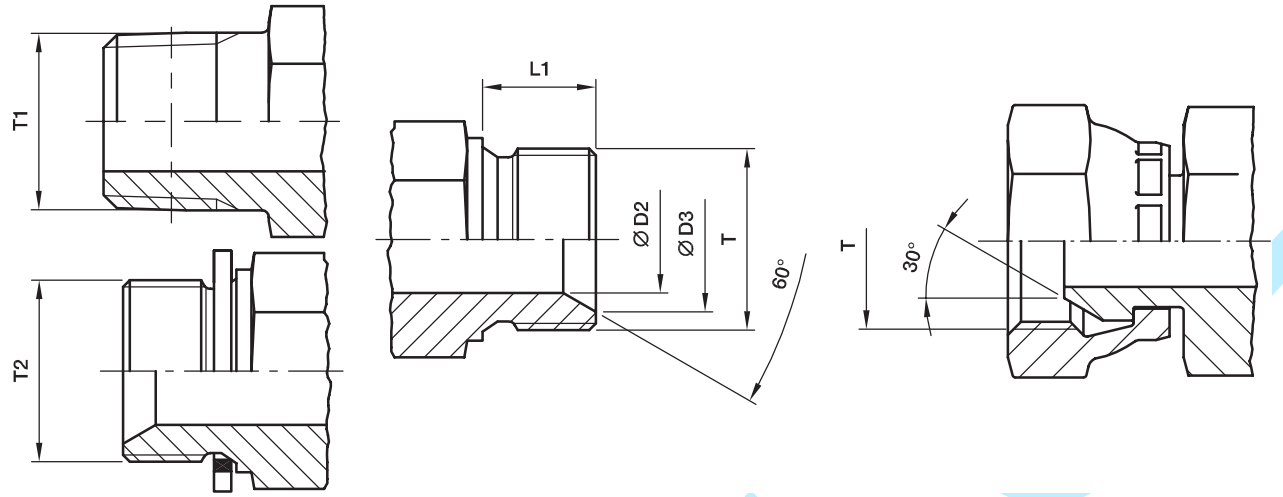

Size	T BSPP	D2 mm	D3 mm	L1 mm	T1 BSPT	 NPT(F)	T2 BSPP
02	G 1/8 A	3.5	7.5	8	1/8 1/4	1/8 1/4	1/8
04	G 1/4 A	4.7	10.4	11	1/4 1/8 3/8	1/4 1/8 3/8	1/4 1/8
06	G 3/8 A	7.9	14.0	12	3/8 1/4 1/2	3/8 1/4 1/2	3/8 1/4
08	G 1/2 A	11.1	17.5	14	1/2 3/8	1/2 3/8 3/4	1/2 1/4 3/8
10	G 5/8 A	14.3	19.3	16	1/2 3/4		1/2 5/8
12	G 3/4 A	16.7	22.9	16	3/4 1/2 1	3/4 1/2 1	3/4 1/4 3/8 1/2 5/8
16	G 1 A	22.2	28.7	19	1 3/4	1 3/4	1 1/2 5/8 3/4
20	G 1 1/4 A	28.6	36.8	22	1 1/4		3/4 1 1 1/4
24	G 1 1/2 A	33.3	42.7	22	1 1/2		1 1 1/4 1 1/2
32	G 2 A	46.0	54.6	25			1 1/2 2

Kovai

Index

NPSM Swivel adapters (SAE J516)/dimensions

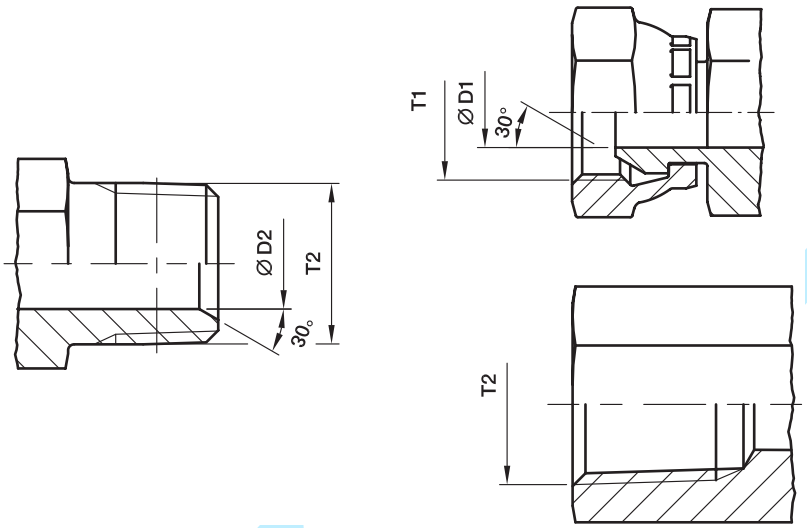

Size	T1 Thread NPSM	Ø D1 mm	Ø D2 mm	T2 Thread NPTF
2-2	1/8-27	4.0	5.0	1/8-27
2-4	1/4-18	5.6	7.0	1/8-27
4-4	1/4-18	5.6	7.0	1/4-18
4-6	3/8-18	8.8	10.0	1/4-18
4-8	1/2-14	12.0	13.5	1/4-18
6-4	1/4-18	5.6	7.0	3/8-18
6-6	3/8-18	8.8	10.0	3/8-18
6-8	1/2-14	12.0	13.5	3/8-18
8-4	1/4-18	5.6	7.0	3/4-16
8-6	3/8-18	8.8	10.0	1/2-14
8-8	1/2-14	12.0	13.5	1/2-14
8-12	3/4-14	16.3	18.0	1/2-14
10-6	3/8-18	8.8	10.0	7/8-14
10-8	1/2-14	12.0	13.5	7/8-14
10-12	3/4-14	16.3	18.0	7/8-14
12-6	3/8-18	8.8	10.0	3/4-14
12-8	1/2-14	12.0	13.5	3/4-14
12-12	3/4-14	16.3	18.0	3/4-14
12-16	1-11.5	21.4	28.9	
16-12	3/4-14	16.3	13.5	1-11.5
16-16	1-11.5	21.4	28.9	1-11.5
16-20	1 1/4-11.5	29.0	32.0	1-11.5
20-16	1-11.5	21.4	28.9	1 1/4-11.5
20-20	1 1/4-11.5	29.0	32.0	1 1/4-11.5
24-24	1 1/2-11.5	34.5	38.0	1 1/2-11.5
32-32	2-11.5	46.0	49.0	2-11.5

Kovaz

Male stud ends/Port end dimensions for tube fittings

Preferred male stud ends for hydraulic applications

For new designs the metric version is recommended according to DIN ISO 6149

Male stud Type F
non adjustable without retaining-ring
Sealing: O-ring
metric – DIN ISO 6149-2/3
UNF – ISO 11926-2/3

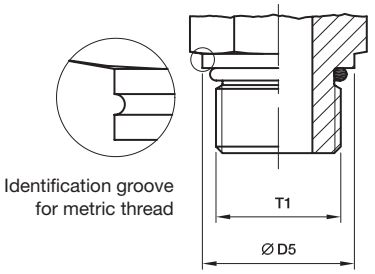

Male stud Type F adjustable without retaining-ring
Sealing: O-ring
metric – DIN ISO 6149-2/3
UNF – ISO 11926-2/3

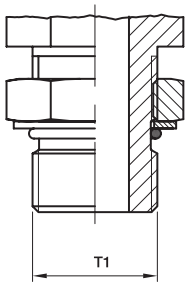

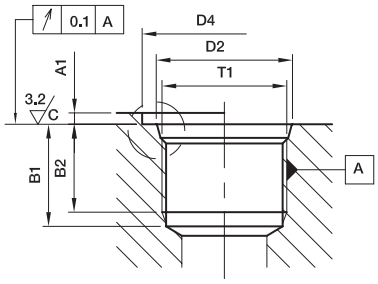

Port
metric – DIN ISO 6149-1
UNF – ISO 11926-1

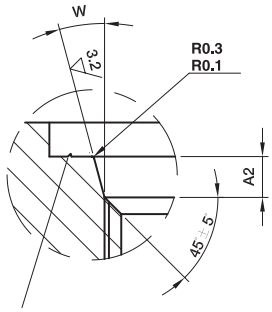

Optional identification of metric port marked with "M"

Thread T1	D5	D4 small min.	D4 wide min.	D2 0.1	A1 max.	A2 0.4	B1 min.	B2 min.	W ± 1°	Identification internal Thread major diameter	Identification internal Thread minor diameter
M 08×1.0	11.8	14	17	9.10	1.0	1.6	11.5	10.0	12°	8.00	6.92
M 10×1.0	13.8	16	20	11.10	1.0	1.6	11.5	10.0	12°	10.00	8.92
M 12×1.5	16.8	19	23	13.80	1.5	2.4	14.0	11.5	15°	12.00	10.38
M 14×1.5	18.8	21	25	15.80	1.5	2.4	14.0	11.5	15°	14.00	12.38
M 16×1.5	21.8	24	28	17.80	1.5	2.4	15.5	13.0	15°	16.00	14.38
M 18×1.5	23.8	26	30	19.80	2.0	2.4	17.0	14.5	15°	18.00	16.38
M 22×1.5	26.8	29	34	23.80	2.0	2.4	18.0	15.5	15°	22.00	20.38
M 27×2.0	31.8	34	40	29.40	2.0	3.1	22.0	19.0	15°	27.00	24.84
M 33×2.0	40.8	43	49	35.40	2.5	3.1	22.0	19.0	15°	33.00	30.84
M 42×2.0	49.8	52	60	44.40	2.5	3.1	22.5	19.5	15°	42.00	39.84
M 48×2.0	54.8	57	66	50.40	2.5	3.1	25.0	22.0	15°	48.00	45.84
7/16-20 UNF-2B	13.8	21	–	12.40	1.6	2.4	14.0	11.5	12°	11.11	9.74
1/2-20 UNF-2B	16.8	23	–	14.50	1.6	2.5	14.0	11.5	12°	12.70	11.30
9/16-18 UNF-2B	16.8	25	–	15.65	1.6	2.5	15.5	12.7	12°	14.29	12.76
3/4-16 UNF-2B	21.8	30	–	20.60	2.4	2.5	17.5	14.3	15°	19.05	17.33
7/8-14 UNF-2B	26.8	34	–	23.95	2.4	2.5	20.0	16.7	15°	22.23	20.26
1 1/16-12 UN-2B	31.8	41	–	29.15	2.4	3.3	23.0	19.0	15°	26.99	24.69
1 5/16-12 UN-2B	40.8	49	–	35.50	3.2	3.3	23.0	19.0	15°	33.34	31.04
1 5/8-12 UN-2B	49.8	58	–	43.50	3.2	3.3	23.0	19.0	15°	41.28	38.99
1 7/8-12 UN-2B	54.8	65	–	49.85	3.2	3.3	23.0	19.0	15°	47.63	45.33

Index

Port end dimensions for tube fittings

Male stud Type E
Sealing: Eolastic seal ED
metric: DIN EN ISO 9974-2
BSPP: ISO 1179-2

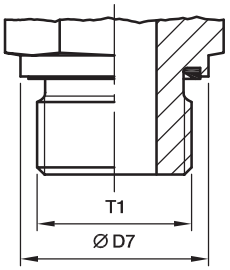

Male stud Type G
(non-adjustable with retaining-ring)
Sealing: O-ring
metric: —
BSPP: ISO 1179-3

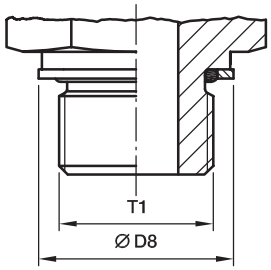

Male stud Type H
(adjustable with retaining-ring)
Sealing: O-ring
metric: —
BSPP: ISO 1179-3

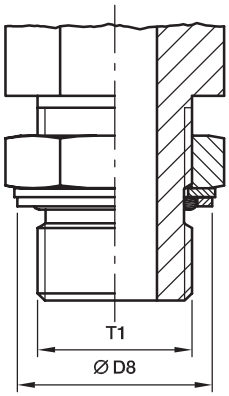

Male stud Type B
Sealing: Cutting face
metric: DIN EN ISO 9974-3
BSPP: ISO 1179-4

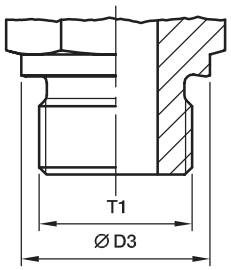

Male stud Type A
Sealing: Sealing washer
DIN 7603, e.g. copper
metric: DIN 3852-1
BSPP: DIN 3852-2

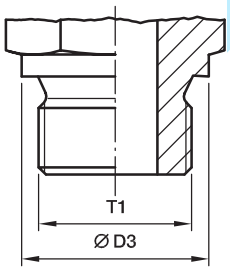

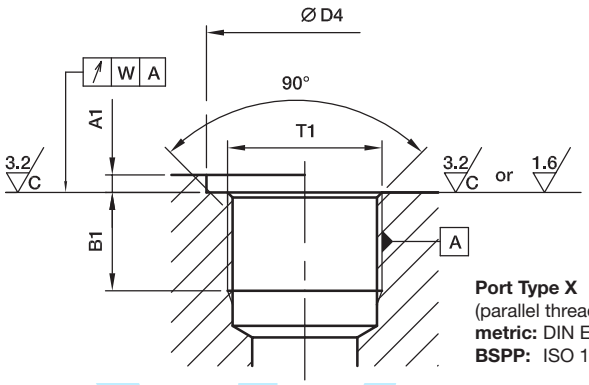

Port Type X
(parallel thread)
metric: DIN EN ISO 9974-1
BSPP: ISO 1179-1

Thread T1	Ø D3 mm	Ø D7 mm	D8 small	D8 wide	D4 min. small	D4$^{+0.4}$ wide*	A1 max.	B1 min.	W	Identification internal Thread major diameter	Identification internal Thread minor diameter
M 08×1.0			12.8	13.15					0.1	8.00	6.92
M 10×1.0	13.9	13.9	14.8	14.75	15	20	1.0	8	0.1	10.00	8.92
M 12×1.5	16.9	16.9	17.8	17.75	18	25	1.5	12	0.1	12.00	10.38
M 14×1.5	18.9	18.9	19.8	19.75	20	25	1.5	12	0.1	14.00	12.38
M 16×1.5	20.9	21.9	22.8	21.75	23	28	1.5	12	0.1	16.00	14.38
M 18×1.5	22.9	23.9	24.8	23.75	25	30	2.0	12	0.1	18.00	16.38
M 20×1.5	24.9	25.9	26.8	25.75	27	34	2.0	14	0.1	20.00	18.38
M 22×1.5	26.9	26.9	27.8	27.75	28	34	2.5	14	0.1	22.00	20.38
M 26×1.5	30.9	31.9	32.8	31.75	33	42	2.5	16	0.2	26.00	24.38
M 27×2.0	31.9	31.9	32.8	32.75	33	42	2.5	16	0.2	27.00	24.84
M 33×2.0	38.9	39.9	40.8	39.75	41	47	2.5	18	0.2	33.00	30.84
M 42×2.0	48.9	49.9	50.8	49.75	51	58	2.5	20	0.2	42.00	39.84
M 48×2.0	54.9	54.9	55.8	54.95	56	65	2.5	22	0.2	48.00	45.84
G 1/8 A	13.8	13.9	14.8	15.00	15	19	1.0	8	0.1	9.73	8.57
G 1/4 A	17.8	18.9	19.8	19.50	20	25	1.5	12	0.1	13.16	11.45
G 3/8 A	21.8	21.9	22.8	23.50	23	28	2.0	12	0.1	16.66	14.95
G 1/2 A	25.8	26.9	27.8	28.50	28	34	2.5	14	0.1	20.96	18.63
G 3/4 A	31.8	31.9	32.8	34.50	33	42	2.5	16	0.2	26.44	24.12
G 1 A	38.8	39.9	40.8	43.50	41	47	2.5	18	0.2	33.25	30.29
G 1 1/4 A	48.8	49.9	50.8	52.50	51	58	2.5	20	0.2	41.91	38.95
G 1 1/2 A	54.8	54.9	55.8	60.00	56	65	2.5	22	0.2	47.80	44.85

*For inch threads: Enlarged diameter vs. ISO 1179-1 to adopt multiple seal ring designs.

Port end dimensions for tube fittings

Male stud NPT/F
Sealing: Tapered thread[1])
NPT ANSI/ASME B 1.20.1-1983
NPTF ANSI/ASME B 1.20.3-1976

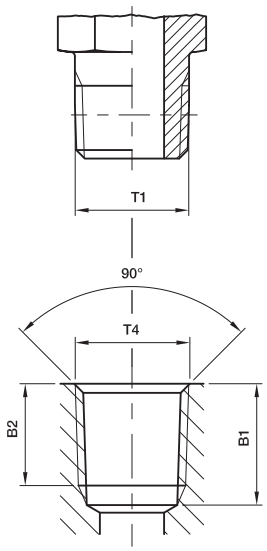

Port NPT/F (taper)
NPT ANSI/ASME B 1.20.1-1983
NPTF ANSI/ASME B 1.20.3-1976

Male stud BSPT
Sealing: Tapered thread[1])
ISO 7/BS 21/DIN 2999-1

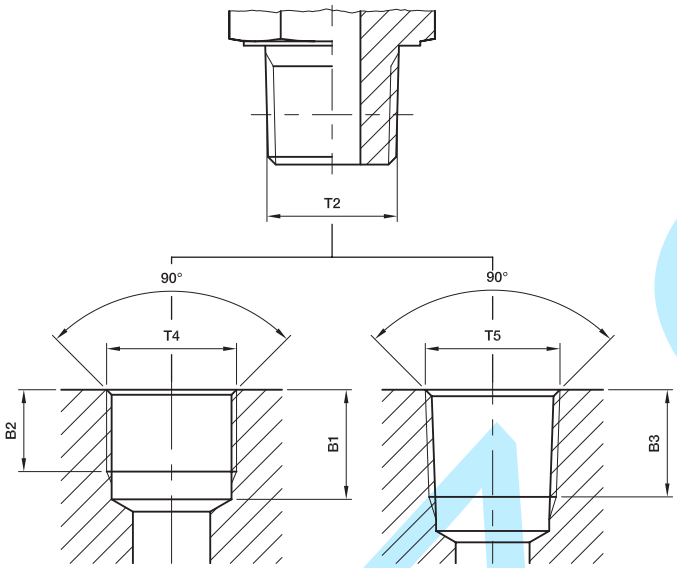

Port BSPP (parallel)
ISO 7/1-Rp
BS 21-Rp (ISO 1179-1)

Port BSPT (taper)
ISO 7/1-Rc/BS 21-Rc
DIN 2999-Rc (Japan: PT)

Male stud Type C
Sealing: Tapered thread short[1])
metric DIN 3852-1
BSPT DIN 3852-2

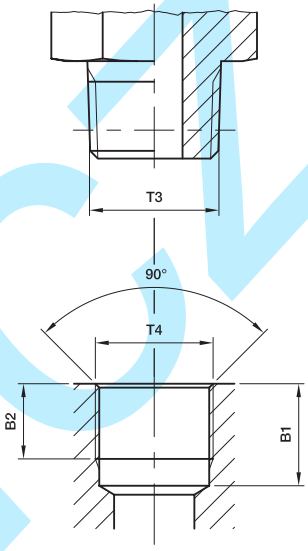

Port (parallel)
metric DIN 3852-1
BSPP DIN 3852-2

Thread T1	Thread T2	Thread T3	Thread T4	Thread T5	B1 min.	B2 min.	B3 min.
1/8-27 NPT/F*			1/8-27 NPT/F*		11.6	6.9	
1/4-18 NPT/F*			1/4-18 NPT/F*		16.4	10.0	
3/8-18 NPT/F*			3/8-18 NPT/F*		17.4	10.3	
1/2-14 NPT/F*			1/2-14 NPT/F*		22.6	13.6	
3/4-14 NPT/F*			3/4-14 NPT/F*		23.1	14.1	
1-11.5 NPT/F*			1-11.5 NPT/F*		27.8	16.8	
1 1/4-11.5 NPT/F*			1 1/4-11.5 NPT/F*		28.3	17.3	
1 1/2-11.5 NPT/F*			1 1/2-11.5 NPT/F*		28.3	17.3	
	R 1/8		Rp 1/8	Rc 1/8	9.7	7.9	7.4
	R 1/4		Rp 1/4	Rc 1/4	12.0	11.2	11.0
	R 3/8		Rp 3/8	Rc 3/8	13.5	12.0	11.4
	R 1/2		Rp 1/2	Rc 1/2	17.6	15.0	15.0
	R 3/4		Rp 3/4	Rc 3/4	19.1	16.0	16.3
	R 1		Rp 1	Rc 1	21.4	19.1	19.0
	R 1 1/4		Rp 1 1/4	Rc 1 1/4	21.4	19.9	21.4
	R 1 1/2		Rp 1 1/2	Rc 1 1/2	22.4	20.6	21.4
		M 08×1.0 tap.	M 08×1.0		10.0	5.5	
		M 10×1.0 tap.	M 10×1.0		10.0	5.5	
		M 12×1.5 tap.	M 12×1.5		13.5	8.5	
		M 14×1.5 tap.	M 14×1.5		13.5	8.5	
		M 16×1.5 tap.	M 16×1.5		13.5	8.5	
		M 18×1.5 tap.	M 18×1.5		13.5	8.5	
		M 20×1.5 tap.	M 20×1.5		15.5	10.5	
		M 22×1.5 tap.	M 22×1.5		15.5	10.5	
		R 1/8 tap.	Rp 1/8		8.5	5.5	
		R 1/4 tap.	Rp 1/4		12.5	8.5	
		R 3/8 tap.	Rp 3/8		12.5	8.5	
		R 1/2 tap.	Rp 1/2		16.5	10.5	

*In the **EO** fitting range only **NPT** thread is manufactured.
In the **Triple-Lok®, O-Lok® and adapters** fitting range for **steel NPTF** thread is manufactured and for **stainless steel NPT** thread is manufactured.
1) Tightness can only be achieved by liquid or plastic sealing aids.

For your notes

Dan Technology
kovaz.cz

Tube assembly

kovaz.cz

Index

Safety instructions E4

General E5

Selection of assembly process E6

New EO assembly instructions for 30° final assembly E10

EO Progressive ring PSR/DPR E11

EO-2 assembly instructions E16

Checking instructions for EO assembly tools E22

EO2-FORM assembly instructions E23

Checking instructions for EO2-FORM tools E29

Weld fitting assembly E30

O-Lok® assembly instructions E31

Triple-Lok® assembly instructions E35

Checking instructions for O-Lok® / Triple-Lok® E39

Ferulok® assembly instructions E40

kovaz.cz

Safety instructions

Tube fittings are safe high-pressure connections

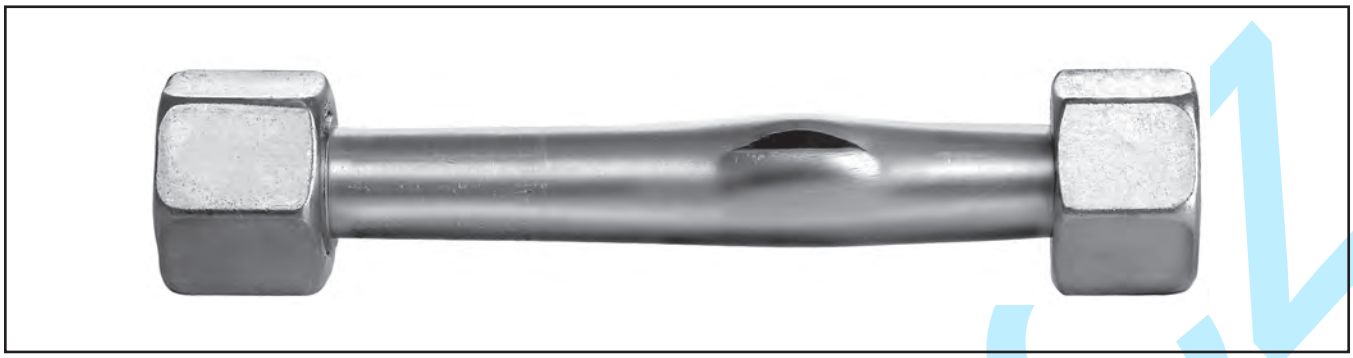

A carefully assembled Parker tube fitting will provide a sealed joint even up to tube burst. Experience has shown that break-downs, re-tightening and leaks can be avoided by following these safety instructions. Please review your fitting procedures.

General safety instructions

- Uncompleted assembly will reduce the pressure and vibration capability of a fitting. It can reduce the life cycle time of a connection and leakage can occur. In extreme cases the connection can fail due to tube shear or tube crack.
- After opening a tube connection, the unit has to be re-tightened with the same force used during prior assembly. Under tightening can result in leakage and can reduce the vibration resistance. Over tightening can reduce the possibilities of repeated assembly. In extreme cases the components can be destroyed.
- Parker tube fittings are intended solely for connections for fluid applications.
- Observe tube recommendations. Non-standard materials or tolerances lead to incorrect assembly.
- Do not use ball bearings, fitting pins or tapered pins, coins or washers instead of the correct Parker blanking plug as blanking parts for 24° cones.
- Tube connection and fitting body once assembled, should remain together. Fitting body is to be used once only for pre-assembly.
- Air bleeding of tube fittings which are under pressure can be dangerous.
- Tube under tension can lead to vibration failure. Tube length and bend angles are to be adhered to precisely. Fix tube lines with tube clamps.
- Tubes are not to be clamped to one another but to suitable fixed points. Plate brackets, cable connections and fixing elements are not suitable. Tubes are not mountings on which to integrate other components e.g. filters, ventilators or shut-off valves.
- Prevent oscillation, pressure surges and inherent strain by using flexible hoses for example.
- Under and over tightening of fittings during assembly reduces the capacity for withstanding pressure and vibration loads and therefore reduces the life of the tube fitting. Leaks from the tube can occur under these circumstances.
- When dismantling/transporting and re-assembling, make sure that no dirt enters the system, that the connection elements (threads, sealing surfaces) are not damaged, seals are not lost and tubes are not bent or flattened. We recommend the use of suitable protective caps.
- Disassembled fittings are to be checked for accuracy and damage and replaced if necessary.
- Do not use hand cutters or tube cutters.
- Dirt and metal contamination can lead to damage to the system and leaks.
- The operating parameters given (e.g. pressure, temperature, medium compatibility) are to be adhered to.
- Avoid flow rates > 8 m/s. The resulting forces are high and can destroy the tube lines.
- Relevant guidelines (e.g. CE, ISO, BG, TÜV, DIN) are to be observed.
- Weld fittings are manufactured out of weldable materials. No other fittings are suitable for welding.
- EO-NIROMONT and Parflange LUBSS are high-performance lubricants. The use of other lubricants generally leads to an increase in assembly force.
- The tools and lubricants recommended by Parker guarantee safe assembly.
- Components and tooling of different manufacturers are not necessarily compatible. For complete safety, use only Parker components.
- Fittings are to be handled with care.
- Tube lines need to be adapted tension free of the relevant connectors before assembly. An easy turning of the nut is required for the complete thread length. Otherwise leakage can occur. In extreme cases with additional vibrations tube cracks can occur.
- Vibrations have to be clamped by tube clamps. Independent vibrating units need to be separated with hoses. Otherwise tube cracks can occur.

Specific safety instructions for assembly

- During a progressive ring and EO-2 fitting assembly the tube has to bottom up in the stud or in the tool. Without tube bottoming the ring cannot bite sufficiently. Under load the connection can fail due to tube shear.
- Correctly flared tubes are essential for leak free performance of Triple-Lok® fittings. Special care must be taken over the flare diameter and surface finish.
- Preset bite type fittings (Progressive ring) need a final assembly according to assembly instructions.
- Stainless steel progressive ring fittings have to be preassembled in hardened tools. Otherwise the connection may fail under load due to tube shear.
- Do not assemble progressive rings and functional nuts on self-made standpipe stud ends. There is a risk of false assembly with the result of connection shear under load.
- The use of steel cutting rings for stainless steel tubes or other unauthorised tool combinations leads to incorrect assembly.

In case of doubt please contact your Parker representative!

General

Assembly of Parker tube fittings always follows the same pattern:

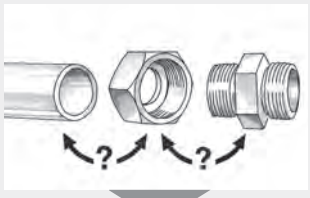

Material combinations

- Use recommended tube material
- Select suitable components according to tube material

Tube preparation

- Cut and deburr thoroughly
- Follow recommendations for minimum straight tube length
- Apply support sleeves when necessary

Machine assembly

- Preferred method
- Most efficient method
- Recommended for large EO progressive ring and EO-2
- Parflange® recommended for 37° flaring

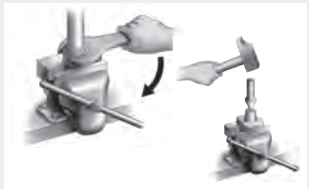

Manual assembly

- Economical for assembly of small quantities
- Suitable for small O.D. tube
- For repair work
- Hand flaring does not provide reliable results
- Stainless steel progressive ring fittings need to be assembled with pre-assembly tools

Assembly check

- Check assembly tube preparation result

⚠ Incorrect assemblies must be corrected or scrapped

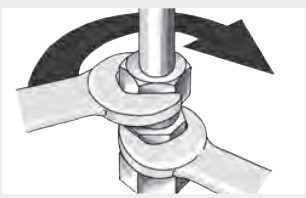

Final installation

- Final fitting assembly according to instruction
- Do not assemble under tension
- Clamp onto rigid fixtures
- Tighten tube clamps after final fitting installation

Selection of assembly process for bite systems

Workshop machines for industrial assembly

Process			Product		
Procedure	**Equipment**	**Process/Time***	**Economic production qty.**	**EO progressive ring PSR/DPR**	**EO-2**
Pre-assembly using EOMAT ECO machine		30 sec.	max. 50 assemblies per day	hydraulic service and on-site installation	ideal for workshop assembly, not ideal for serial production
Pre-assembly using EOMAT UNI machine		15 sec.	max. 100 assemblies per day	ideal for workshop assembly, not suitable for LL series	ideal for workshop assembly, not suitable for LL series
Pre-assembly using EOMAT PRO machine		8-12 sec.	min. 100 assemblies per day	ideal for workshop assembly and mass production	iideal for workshop assembly and mass production
Tube forming using EO-KARRYFORM machine		20 sec.	max. 100 assemblies per day	not applicable	not applicable
Tube forming using EO2-FORM F3 machine		20 sec.	max. 300 assemblies per day	not applicable	not applicable
Tube forming using EO2-FORM PRO22		6 sec.	min. 100 assemblies per day	not applicable	not applicable
Tube flaring using Parflare ECO		30 sec.	max. 50 assemblies per day	not applicable	not applicable
Tube flaring using Parflange® 1025 machine		45 sec.	max. 100 assemblies per day	not applicable	not applicable
Tube flaring using Parflange® 50 machine		30 sec.	Basic: max. 500 assemblies per day PRO: 1200 assemblies per day	not applicable	not applicable

*Average for total assembly time of medium size fitting including assembly check and final tightening

Selection of assembly process for bite systems

Manual assembly for field repair

Process			Product		
Procedure	**Equipment**	**Process/Time***	**Economic production qty.**	**EO progressive ring PSR/DPR**	**EO-2**
Direct in fitting		60 sec.	max. 10 assemblies per week	field repair only, not for efficient production and tubes larger than 22 mm OD, preferred method for PSR, not for stainless steel	field repair only, not for efficient production and tubes larger than 22 mm OD
Pre-assembly in vice		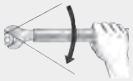 45 sec.	max. 10 assemblies per week	field repair only, not for efficient production	field repair only, not for efficient production
Flaring in vice		120 sec.	max. 10 flarings per week	not applicable	not applicable
Pre-assembly using HVM-B device		30 sec.	max. 50 assemblies per day	final assembly in fitting must be 1/2 turn, not for tubes larger than15 mm OD, not for stainless steel	not applicable
Pre-assembly using EO-KARRYMAT		60 sec.	max. 20 assemblies per day	ideal for repair jobs and small on-site installations, not suitable for volume production	ideal for repair jobs and small on-site installations, not suitable for volume production
Tube flaring using KARRYFLARE		60 sec.	max. 20 flarings per day	not applicable	not applicable

*Average for total assembly time of medium size fitting including assembly check and final tightening

Selection of assembly process for tube forming systems

Workshop machines for industrial assembly

Process			Product		
Procedure	**Equipment**	**Process/Time***	**EO2-FORM**	**Triple-Lok®**	**O-Lok®**
Pre-assembly using EOMAT ECO machine		30 sec.	not applicable	not applicable	not applicable
Pre-assembly using EOMAT UNI machine		30 sec.	not applicable	suitable for workshop assembly, preferred process is Parflange®	not applicable
Pre-assembly usingt EOMAT PRO machine		10 sec.	not applicable	not applicable	not applicable
Tube forming using EO-KARRYFORM machine		20 sec.	ideal for repair jobs and small on-site installations, not recommended for mass production	not applicable	not applicable
Tube forming using EO2-FORM F3 machine		40 sec.	ideal for workshop assembly and serial production	not applicable	not applicable
Tube forming with EO2-FORM PRO22 machine		6 sec.	ideal for workshop assembly and serial production	not applicable	not applicable
Tube flaring using Parflare ECO machine		30 sec.	not applicable	ideal for on-site installations, not recommended for mass production	not applicable
Tube flaring using Parflange® 1025 machine		45 sec.	not applicable	ideal for workshop assembly, not recommended for mass production, not suitable for assembly of SS tubes over 25 mm	ideal for workshop assembly, not recommended for mass production, not suitable for assembly of SS tubes over 25 mm
Tube flaring using Parflange® 50 machine		30 sec.	not applicable	ideal for workshop assembly and serial production	ideal for workshop assembly and serial production automatic sleeve feeder available for mass production

*Average for total assembly time of medium size fitting including assembly check and final tightening

Selection of assembly process for tube forming systems

Manual assembly for field repair

Process			Product		
Procedure	**Equipment**	**Process/Time***	**EO2-FORM**	**Triple-Lok®**	**O-Lok®**
Direct in fitting		60 sec.	not possible, use EO-2 for field repair	not possible, use 1015 device or hand flaring tools for field repair	not possible, use braze sleeves or hose lines for field repair
Pre-assembly in vice		45 sec.	not possible, use EO-2 for field repair	not possible, use 1015 device or hand flaring tools for field repair	not possible, use braze sleeves or hose lines for field repair
Flaring in vice		120 sec.	not applicable	field repair only, not for efficient production, not for stainless steel tubes	not possible, use braze sleeves or hose lines for field repair
Pre-assembly using HVM-B device		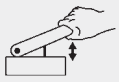 30 sec.	not applicable	not applicable	not applicable
Pre-assembly using EO-KARRYMAT		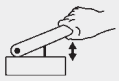 60 sec.	not possible, use EO-2 for field repair	not applicable	not applicable
Tube flaring using KARRYFLARE		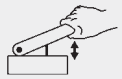 60 sec.	not possible, use EO-2 for field repair	ideal for repair jobs and small on-site installations, not suitable for industrial production	not applicable

*Average for total assembly time of medium size fitting including assembly check and final tightening

KOVC

Index

New EO assembly instructions for 30° final assembly

Traditional pre-assembly

- According to DIN 3859 T2
- Can be used optional as usual
- Machine preset
- Manual preset

- Machine presetting: Machine preset corresponding to 1¼ turn of nut

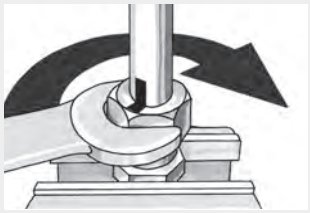

- Manual presetting: Tighten the nut by 1¼ turns

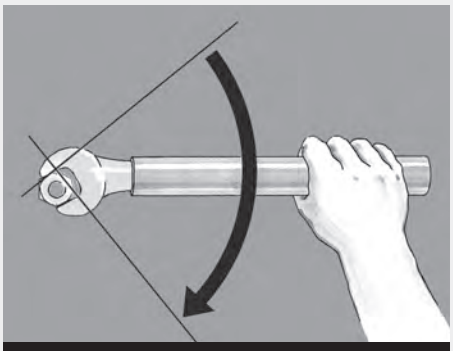

Optimized EO pre-assembly

- Machine preset
- Manual preset

- Machine presetting: Machine preset corresponding to 1½ turn of nut

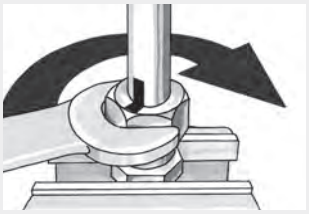

- Manual presetting: Tighten the nut by 1½ turns

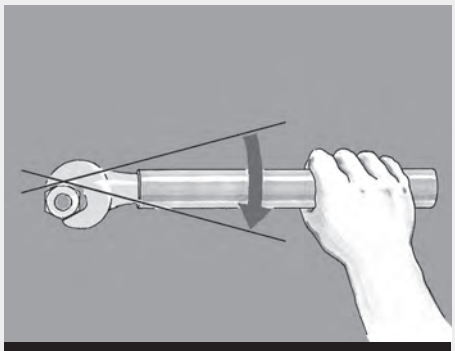

EO progressive ring PSR/DPR

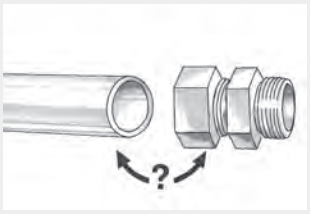

Material combinations

- Select suitable EO progressive ring fitting

Tube material	EO-Fitting body	assembly instructions
Steel	Steel (LL=D-Ring)	
Stainless Steel	Stainless Steel	Pre-assembly by machine or hardened tool required
Copper	Brass (D-Ring)	
Plastic e.g. Polyamide	Steel, Brass, Stainless Steel	Support sleeve E required Check assembly devices for suitability
Stainless Steel	Steel	Stainless Steel DPR must be used Pre-assembly by machine or hardened tool required

Tube preparation

- Cut and deburr thoroughly
- Do not assemble under tension

Min. length straight tube ends

Series L										
Tube OD	06	08	10	12	15	18	22	28	35	42
L min	39	39	42	42	45	49	53	53	60	60
Series S										
Tube OD	06	08	10	12	14	16	20	25	30	38
L min	44	44	47	47	54	54	59	68	73	82

1

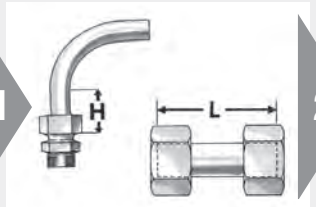

- Minimum lengths of straight tube-ends, H=2× nut length
- Use swivel union “GZ” instead of short tubes

2

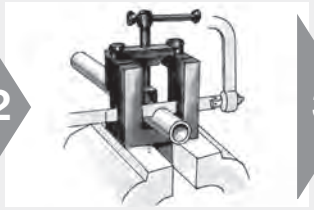

- Cut tube squarely
- max ±1°deviation
- ⚠ Do not use pipe cutters
- EO tube-cutting tool (AV) for manual cutting

3

- Remove internal and external burrs
- max. chamfer 0.3 mm × 45°
- Recommendation: In-Ex Tube Deburring Tool 226

Support sleeves VH

- Support sleeve VH for thin wall or soft metal tubes (see chart)

Tube insert E

- Support sleeve E for plastic tubes

1

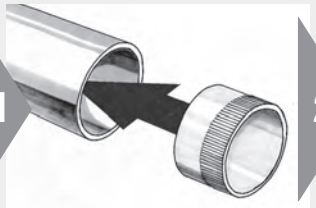

- Insert support sleeve like shown

2

- Drive VH into tube-end

- ● Support sleeve required
- ■ Support sleeve required for heavily loaded lines (vibrations

VH selection chart for EO Progressive Ring
For steel tubes material ST 37.4
and for stainless steel tubes material 1.4571 and 1.4541

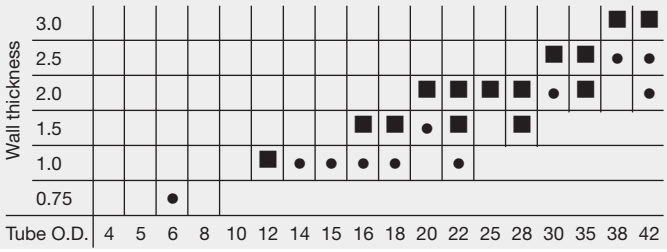

For soft metal tubes (e. g. copper)

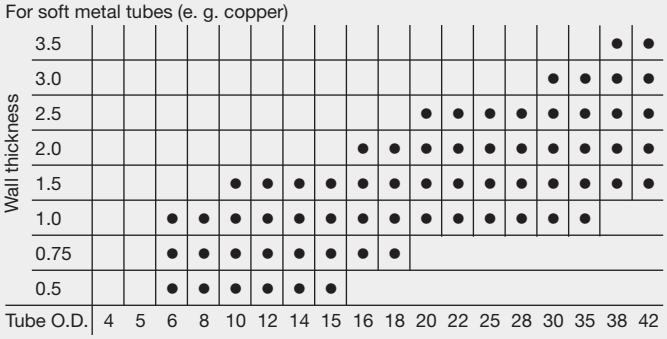

EO progressive ring PSR/DPR

100% Pre-assembly with EOMAT/ EO-KARRYMAT

- Preferred method
- Most efficient method

⚠ HVMB-device not suitable for 100% assembly of PSR fittings

1

Automatik

12-L PSR/DPR

Counter 123

Lifetime MOK 123456

- EOMAT ECO/UNI and EO-KARRYMAT: Adjustment according to pressure chart on machine (PSR/DPR) Reduction of preset pressures for tube materials softer than steel and stainless steel required
- EOMAT PRO: Automatic tool recognition
- Non-EOMAT-machines: Check suitability

2

⚠ Use genuine Parker assembly con „MOK“

- Control (see checking instructions)
- Clean and lubricate assembly cone and thread regularly
- For EOMAT PRO use assembly cone “MOK...PRO” with transponder chip

3

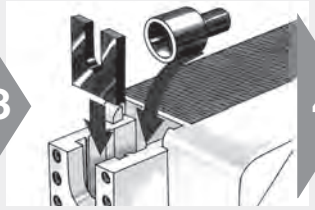

- Insert proper tools
- Clean and lubricate assembly cones regularly
- EO-KARRYMAT: Close valve on handpump
- 2-piece backing plates for 35-L and 42-L

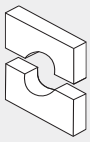

4

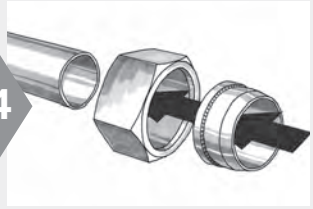

- Slide nut and progressive ring as shown onto the end of the tube

5

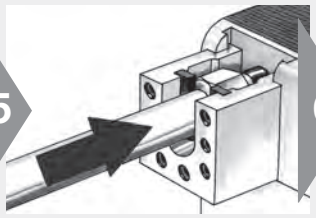

- Place tube with progressive ring and nut into the die
- Press tube-end firmly into the assembly cone

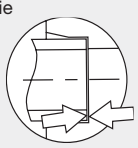

6

- Hold tube firmly
- EOMAT: Press and hold start button
- Use support and foot switch for long tubes
- EO-KARRYMAT: Operate handpump until assembly pressure is reached

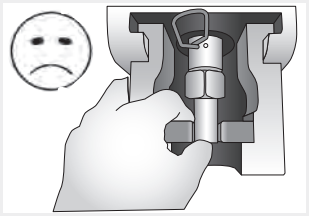

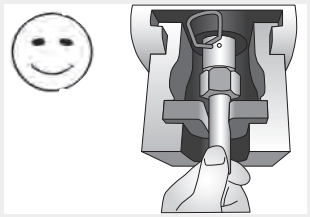

- Safe holding of to be processed tubes
- While holding and setting down, do no hold onto the lifting zone of the cylinder

7

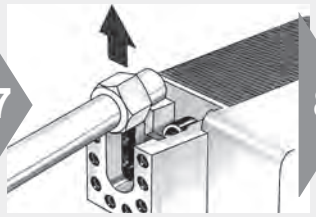

- After completion of pre-assembly, remove the tube for assembly check
- EO-KARRYMAT: Open valve on handpump

8

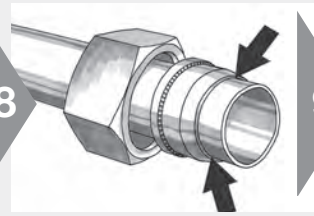

⚠ Check to make sure that a visible collar covers the front of the first cutting edge

- It does not matter if the ring can be rotated on the tube-end

9

- Use distance gauge AKL for checking in mass production

10

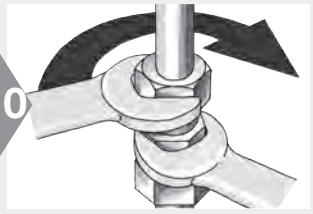

- Assemble fitting until wrench-tight (without spanner extension)

⚠ Mark position of nut

⚠ The body must be held rigid

11

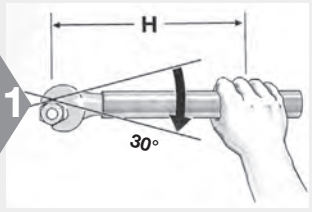

⚠ Then tighten fitting firmly by 30° (½ flat)

⚠ Recommended to use spanner extension for sizes over 20 mm O.D. **(see chart)**

- Assembly torques are available on request

Spanner length

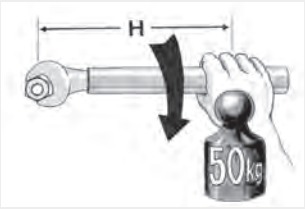

Size		Spanner length H [mm]
22-L		400
28-L	20-S	500
35-L	25-S	800
42-L	30-S	1000
	38-S	1200

EO progressive ring PSR/DPR

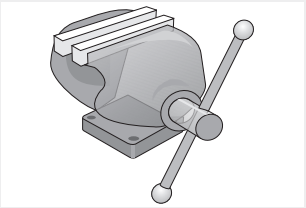

Pre-assembly with hardened tool VOMO

- Reliable method for repair jobs
- Only economic for assembly of small quantities

⚠ Stainless steel EO progressive rings must be pre-assembled using a hardened tool (VOMO)

- For tubes over 25 mm, EO-KARRYMAT/EOMAT is recommended

1

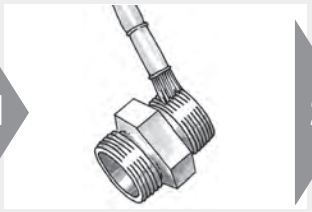

⚠ For stainless steel assembly threads must be lubricated

- Use EO-NIROMONT special high-performance lubricant for stainless steel fittings

2

- Control (see checking instructions)
- Cones of pre-assembly bodies must be checked regularly (after 50 pre-assemblies) with cone templates (KONU)
- Clean and lubricate assembly cone and thread regularly

3

- Use pre-assembly tool VOMO
- Fitting body may be used <u>one</u> time only (not for stainless steel)
- Screw on nut until finger-tight

4

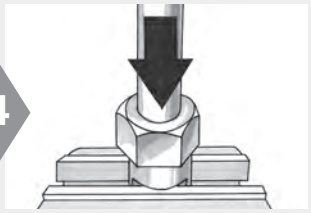

⚠ Press tube-end firmly into the assembly cone

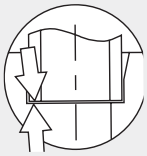

5

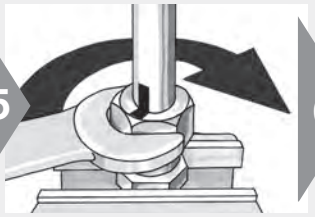

⚠ Mark position of the nut

- Tighten the nut by 1½ turns

⚠ Recommended to use spanner extension for sizes over 20 mm O.D.

6

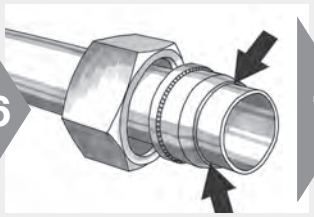

Assembly check:

- Loosen nut

⚠ Check to make sure that a visible collar covers the front of the first cutting edge

⚠ It does not matter if the ring can be rotated on the tube-end

7

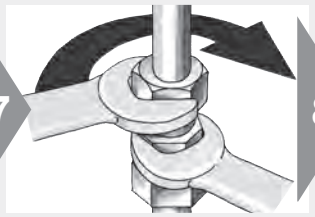

- Assemble fitting until wrench-tight (without spanner extension)

⚠ Mark position of nut

8

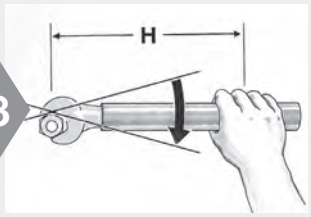

⚠ Then tighten fitting firmly by 30° (½ flat)

⚠ Recommended to use spanner extension for sizes over 20 mm O.D. **(see chart)**

- Assembly torques are available on request

The body must be held rigid

Spanner length

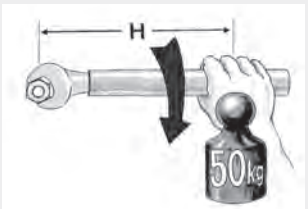

Size	Spanner length H [mm]
22-L	400
28-L 20-S	500
35-L 25-S	800
42-L 30-S	1000
38-S	1200

EO progressive ring PSR/DPR

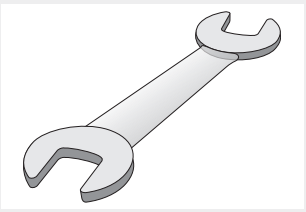

Direct assembly

- Simple procedure for single assemblies of small dimensions
- Not economic for series assembly

⚠ Tubes ∅ 30, 35, 38 and 42 mm must be pre-assembled in vice

⚠ Stainless steel connections have to be assembled using pre-assembly tool (VOMO)

⚠ Properly cleaned studs (“BE”) have to be assembled with pre-assembly tools

1

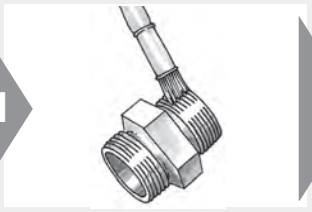

⚠ Lubrication of threads will reduce wear and assembly forces
Threads on stainless steel fittings must be lubricated
Use EO-NIROMONT special high-performance lubricant for stainless steel fittings

2

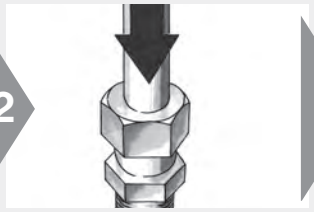

- Screw on nut until finger-tight

⚠ Press tube-end firmly into fitting body

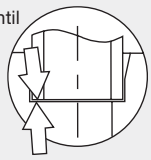

3

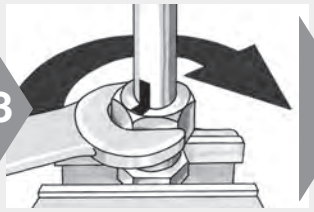

- Mark position of the nut
- Tighten the nut by 1½ turns

⚠ Recommended to use spanner extension for sizes over 20 mm O.D. **(see chart)**

- Fitting body may be used one time only

4

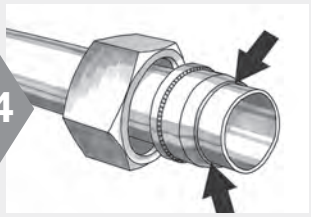

Assembly check:

- Loosen nut

⚠ Check to make sure that a visible collar covers the front of the first cutting edge

- It does not matter if the ring can be rotated on the tube-end

Repeated assembly

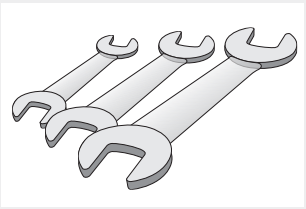

- Each time the tube-end has been disconnected, the fitting must be properly tightened again

⚠ EO progressive rings cannot be replaced, once assembled

1

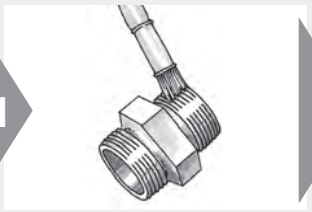

⚠ Threads on stainless steel fittings must be lubricated
Use EO-NIROMONT special high-performance lubricant for stainless steel fittings

2

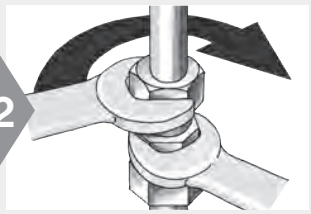

- When repeating the assembly the nut must tightened with a wrench in the primary original position.
- The body must be held rigid

⚠ Recommended to use spanner extension for sizes over 20 mm O.D. **(see chart)**

Spanner length

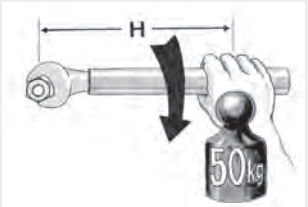

Size		Spanner length H [mm]
22-L		400
28-L	20-S	500
35-L	25-S	800
42-L	30-S	1000
	38-S	1200

EO-2 assembly instructions

Tube prepartion

- Cut and deburr thoroughly
- Do not assemble under tension

1

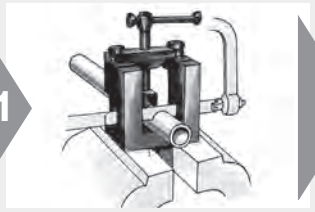

- Cut tube squarely
- max ± 1° deviation
- ⚠ Do not use pipe cutters
- EO tube-cutting tool (AV)

2

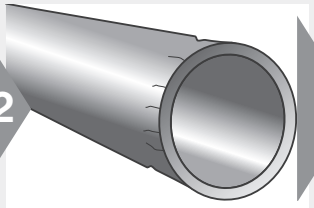

- Don't deform tube end at cutting or bending
- Marks or scratches can result in leckage
- Thin wall and soft tubes are very sensitive

3

- Remove internal and external burrs
- max. chamfer 0.3 mm × 45°
- Seal can be damaged by large burrs

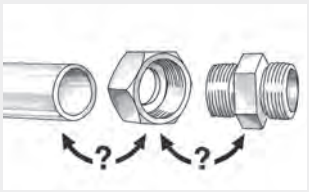

Material combinations

- Select suitable FM-type

	Steel tube	Stainless Steel tube	Plastic tube
Steel fitting	FM…CF	FM…SSA	FM…CF+E
Stainless Steel fitting	—	FM…71	FM…71+E

Tube insert E

- Tube insert E for plastic tubes

Support sleeves VH

- Support sleeve VH for thin wall or soft metal tubes

1

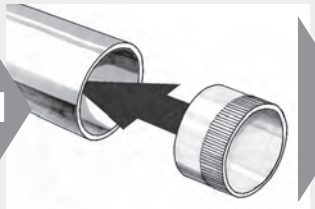

- Support-sleeve selection: see instruction shipped with product

2

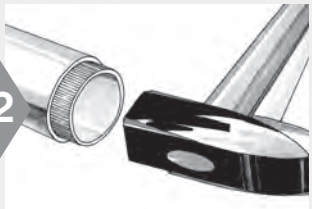

- Drive VH into tube-end

Use of support sleeves "VH" with EO-2 fittings

Tube O.D.	0.5	0.75	1	1.5	2	2.5	3	3.5	4
4									
6									
8									
10									
12									
14									
15									
16									
18									
20									
22									
25									
28									
30									
35									
38									
42									

Functional test required for other materials or dimensions not specified.
Support sleeve VH not required for EO-2 steel (FM/CF) and steel tube.
For EO-2 stainless steel (FM/71) and stainless steel tube, a functional test is required.
Support sleeve VH **not required** for EO-2 and steel tube.
Support sleeve VH **not required** for EO-2/71 or EO-2/SSA and stainless steel tube.

EO-2 assembly instructions

Replacement of sealing ring/Repeated assembly

- Sealing ring DOZ can be changed separately

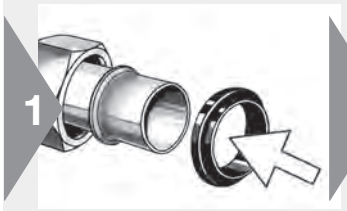

- After disassembly, sealing ring can be pulled of the tube-end
- Check for damage and replace if necessary
- Abrasion on outer rubber parts does not effect performance

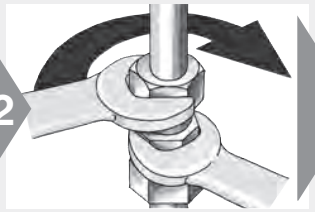

- Assemble fitting until wrench-tight (without spanner extension)

⚠ The body must be held rigid

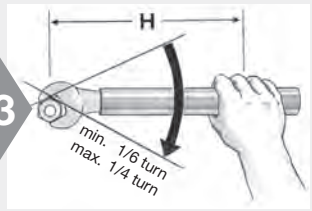

⚠ Then tighten fitting firmly by min 1/6 (max ¼) turn (1 to 1½ flats)

⚠ Recommended to use spanner extension for sizes over 20 mm O.D. **(see chart)**

Spanner length

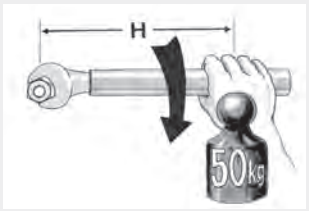

Size		Spanner length H [mm]
22-L		400
28-L	20-S	500
35-L	25-S	800
42-L	30-S	1000
	38-S	1200

EO-2 assembly instructions

Assembly with EOMAT/ EO-KARRYMAT

- Preferred method
- Most efficient method
- HVM-B device is not suitable for EO-2

1

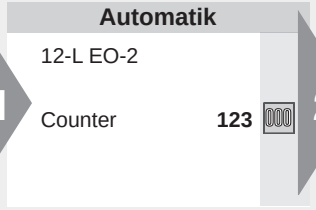

- EOMAT ECO/UNI: Adjustment according to pressure on machine (see instructions shipped with product box)
- EOMAT PRO: Automatic tool recognition
- EO-KARRYMAT: Refer to chart on machine
- Non-EOMAT-machines: check suitability

2

⚠ Use genuine Parker assembly cone “MOKEO2”

- Check according to MOK checking instructions
- For EOMAT PRO use assembly cone “MOK...PRO” with transponder chip. Advantages: easy and safe assembly

3

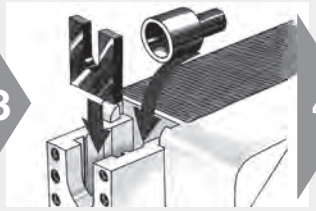

- Insert proper tools
- 2-piece tube backing plates for 35-L and 42-L
- EO-KARRYMAT: Close valve on handpump

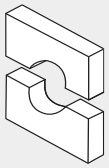

4

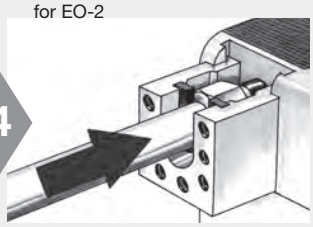

- Place tube with functional nut into the die
- Press tube-end firmly into the assembly cone
- Hold back nut for easy tube insertion

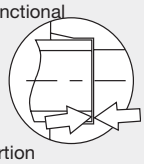

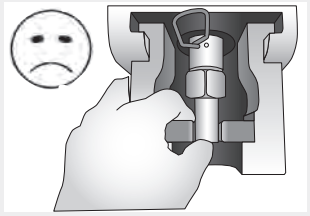

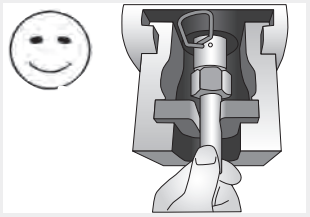

- Safe holding of to be processed tubes
- While holding and setting down, do no hold onto the lifting zone of the cylinder

5

- Hold tube firmly
- EOMAT: Press and hold start button
- Use support and foot switch for long tubes
- EO-KARRYMAT: Operate handpump until assembly pressure is reached. Then open valve on handpump

6

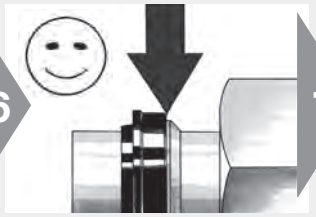

Assembly check:

- Gap between sealing ring and retaining ring must be closed
- A little relaxation (approx. 0.2 mm) is allowed

7

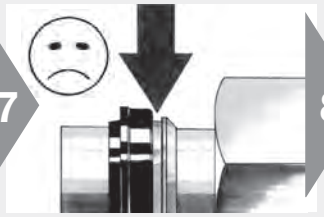

⚠ **Gap not closed:** Check all components, tube, machine, tools and pressure setting

⚠ Repeat assembly with increased pressure if necessary

8

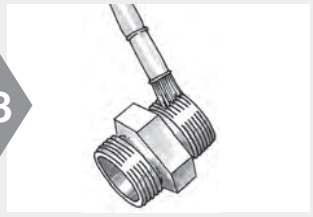

⚠ Threads of stainless steel fittings must be lubricated

⚠ Use EO-NIROMONT special high-performance lubricant for stainless steel fittings

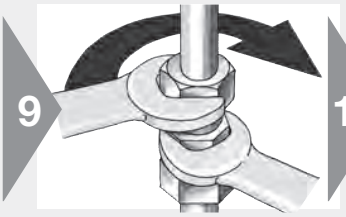

- Assemble fitting until wrench-tight (without spanner extension)

⚠ The body must be held rigid

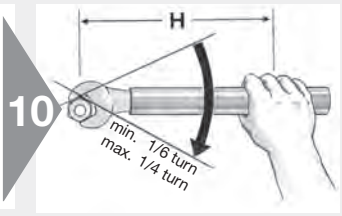

⚠ Then tighten fitting firmly by min 1/6 (max. ¼) turn (1 to 1½ flats)

⚠ Recommended to use spanner extension for sizes over 20 mm O.D. **(see chart)**

Spanner length

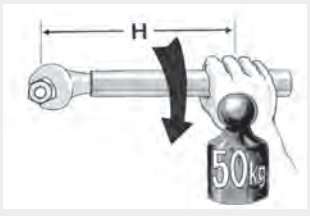

Size		Spanner length H [mm]
22-L		400
28-L	20-S	500
35-L	25-S	800
42-L	30-S	1000
	38-S	1200

EO-2 assembly instructions

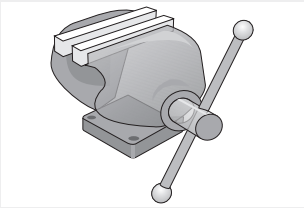

Assembly in vice

- Reliable method
- Only economic for assembly of small quantities

1

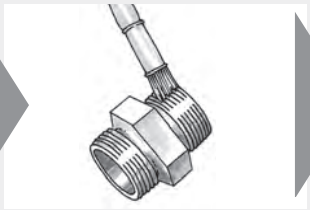

⚠ Threads on stainless steel fittings must be lubricated
⚠ Use EO-NIROMONT special high-performance lubricant for stainless steel fittings

2

- Check according to VOMO (checking instructions)
- Use pre-assembly tool VOMO
- Fitting body may be used one time only and components must stay together

3

- Push functional nut onto tube-end
- Advantage: Easy tube insertion, particularly large dimensions

4

⚠ Press tube-end firmly into the assembly cone
- Screw on nut until finger-tight

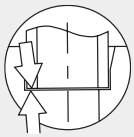

5

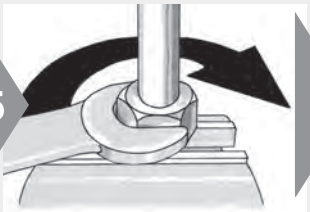

- Tighten until sharp increase of resistance (approx. 1 to 1½ turns)

⚠ Recommended to use spanner extension for sizes over 20 mm O.D. **(see chart)**

6

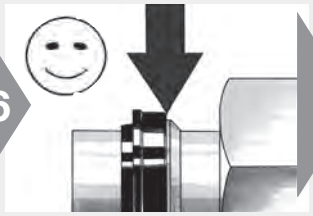

Assembly check:
- Gap between sealing ring and retaining ring must be closed
- A little relaxation (approx. 0.2 mm) is allowed

7

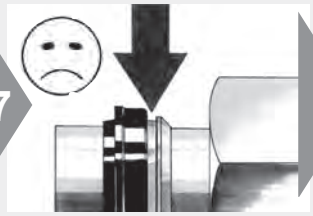

⚠ **Gap not closed:** Repeat assembly with increased torque. Check gap again.

8

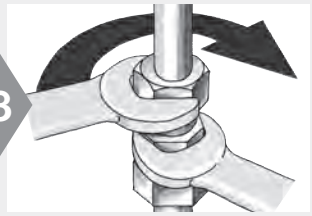

- Assemble fitting until wrench-tight (without spanner extension)

⚠ The body must be held rigid

9

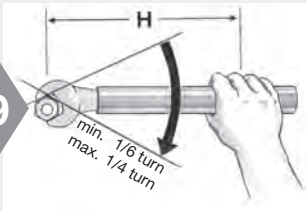

⚠ Then tighten fitting firmly by min $^1/_6$ (max. ¼) turn (1 to 1½ flats)

⚠ Recommended to use spanner extension for sizes over 20 mm O.D. **(see chart)**

Spanner length

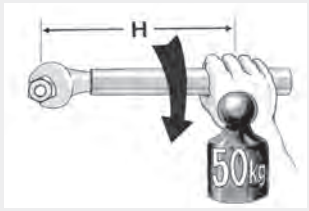

Size	Spanner length H [mm]
22-L	400
28-L 20-S	500
35-L 25-S	800
42-L 30-S	1000
38-S	1200

EO-2 assembly instructions

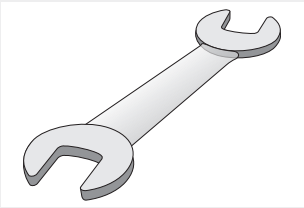

Direct assembly

- Simple procedure for single assemblies of small dimensions
- Not economic for series assemblies

⚠ Tubes ∅ 30, 35, 38 and 42 mm must be pre-assembled in vice

1

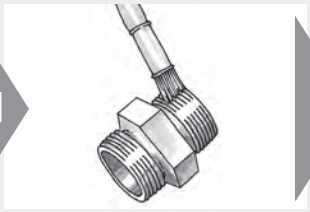

⚠ Threads on stainless steel fittings must be lubricated
⚠ EO-NIROMONT is a special high-performance lubricant for stainless steel fittings

2

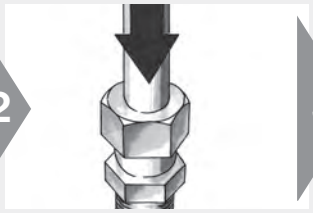

⚠ Press tube-end firmly into the assembly cone
- Push back nut for easy tube insertion

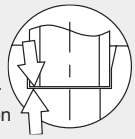

3

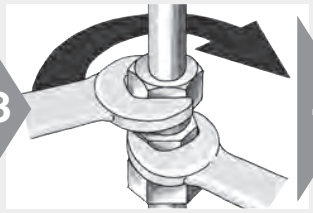

- Tighten until sharp increase of resistance (approx. 1 to 1½ turns)

⚠ Recommended to use spanner extension for sizes over 20 mm O.D. **(see chart)**

4

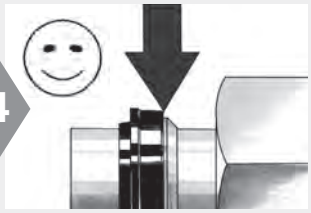

Assembly check:
- Gap between sealing ring and retaining ring must be closed
- A little relaxation (approx. 0.2 mm) is allowed

5

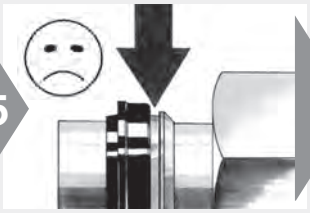

⚠ **Gap not closed:** Check all components including tube

6

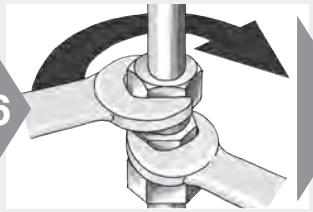

- Assemble fitting until wrench-tight (without spanner extension)

⚠ The body must be held rigid

7

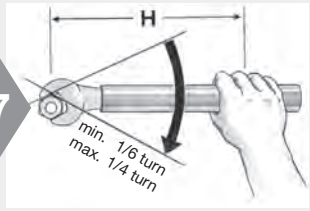

⚠ Then tighten fitting firmly by min $^1/_6$ (max ¼) turn (1 to 1½ flats)

⚠ Recommended to use spanner extension for sizes over 20 mm O.D. **(see chart)**

Spanner length

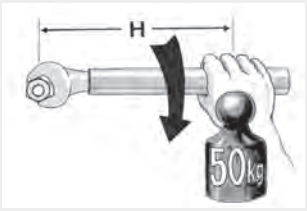

Size	Spanner length H [mm]
22-L	400
28-L 20-S	500
35-L 25-S	800
42-L 30-S	1000
38-S	1200

Checking instructions for EO assembly tools

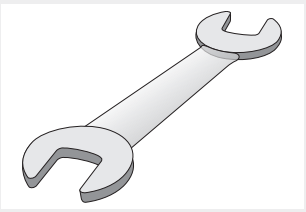

VOMO tools for manual pre-assembly in vice MOK for use in EO assembly machines

⚠ Use of damaged, worn or non-suitable tooling may result in fitting failure or machine damage
⚠ Tools must be checked regularly, at least after 50 assemblies
⚠ Worn tools must be replaced ⚠ Use only genuine Parker tools
⚠ Tools must be kept clean and lubricated

1

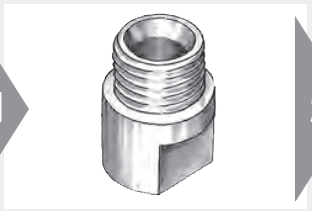

- Clean cone surface for checking

2

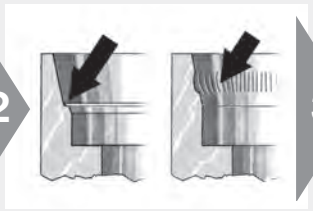

- Visual checks:
  Cone must be free of wear, damage or cracks

3

- Check for deformation of geometry

⚠ Special cone template KONU must be used

- KONU cone templates are precision measuring devices and must be handled accordingly

4

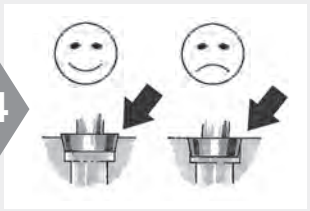

- Check contour:
  The rear of the template must protrude slightly above the top face of the cone or may be flush

5

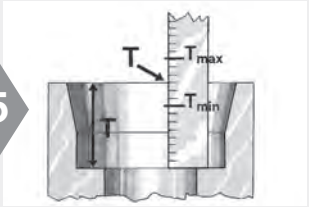

- Check insertion depth

⚠ Deviations from the insertion depth can cause leakages

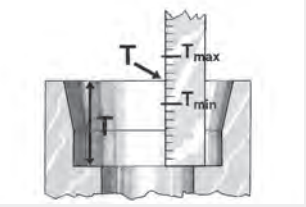

- Insertion depth T

Table: Tool for presetting tool (MOK and VOMO)

Type	T_{min}	T_{max}	Typ	T_{min}	T_{max}
6-L	6.95	7.05	6-S	6.95	7.05
8-L	6.95	7.05	8-S	6.95	7.05
10-L	6.95	7.05	10-S	7.45	7.55
12-L	6.95	7.05	12-S	7.45	7.55
15-L	6.95	7.05	14-S	7.95	8.05
18-L	7.45	7.55	16-S	8.45	8.55
22-L	7.45	7.55	20-S	10.45	10.55
28-L	7.45	7.55	25-S	11.95	12.05
35-L	10.45	10.55	30-S	13.45	13.55
42-L	10.95	11.05	38-S	15.95	16.05

EO2-FORM assembly instructions

Material combinations

- Select suitable materials
- See catalogue for exact tube specifications

Material selection chart

Tube material	Fitting and nut material	Sealing material
Steel	Steel	Steel/NBR or Steel/FKM
Stainless Steel	Stainless Steel	Stainless/Steel FKM/NBR
Stainless Steel	Steel	Steel/NBR or Steel/FKM

Tube preparation

- Cut and deburr thoroughly
- Cut and bend tubes exactly

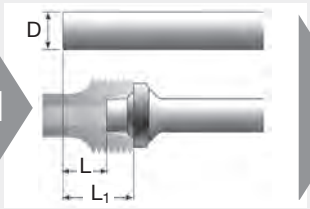

- Take extra length into account **(see tube preparation chart)**

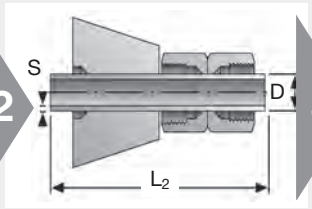

- Minimum lengths L_2 of straight tubes **(see chart)**

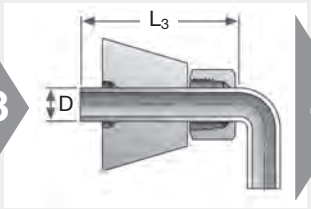

- Minimum lengths L_3 of straight tube-ends before bend **(see chart)**

- Cut tube squarely
- max ± 1° deviation
- ⚠ Do not use pipe cutters
- EO tube-cutting tool (AV) for manual cutting

- Remove internal and external burrs
- max. chamfer 0.3 mm × 45°
- Recommendation: In-Ex Tube Deburring Tool 226

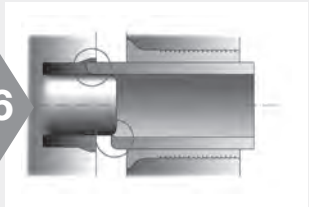

- Chips, dirt, internal or external burrs and paint prevent correct tube insertion
- ⚠ Dirty tubes result in worn-out or damaged tools

EO2-FORM assembly instructions

Tube preparation chart – Series L

EO2-FORM/EO-KARRYFORM
min = 130 mm
EO2FORMPRO
min = 100 mm

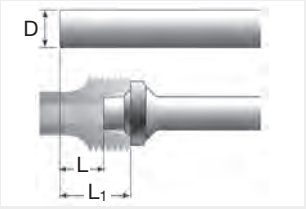

- Extra length

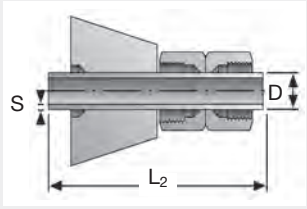

- Minimum tube length

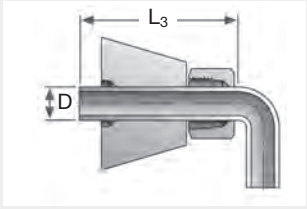

- Minimum straight length before bend

- Minimum clearance of U-shape bends

Tube-OD Series	S Wall-thickness	L Steel ± 0.5	L Stainless steel ± 0.5	L_1 Steel	L_1 Stainless Steel	L_2	L_3
6L	1.0	6.0	6.0	13.0	13.0	90	63
	1.5	6.0	6.0	13.0	13.0		
8L	1.0	5.5	5.5	12.5	12.5	92	65
	1.5	5.5	5.5	12.5	12.5		
	2.0	5.0		12.0			
	2.5	4.5		11.5			
10L	1.0	5.5	5.5	12.5	12.5	95	68
	1.5	5.0	6.0	12.0	13.0		
	2.0	5.0	6.0	12.0	13.0		
12L	1.5	5.0	5.5	12.0	12.5	95	70
	2.0	5.0	5.5	12.0	12.5		
15L	1.0	5.0	6.5	12.0	13.5	102	75
	1.5	5.0	6.5	12.0	13.5		
	2.0	5.0	6.0	12.0	13.0		
18L	1.5	5.5	6.0	13.0	13.5	110	80
	2.0	5.5	6.5	13.0	14.0		
22L	1.5	6.0	6.0	13.5	13.5	120	90
	2.0	6.5	7.0	14.0	14.5		
	2.5	7.0	7.0	14.5	14.5		
28L	2.0	5.5	7.0	13.0	14.5	140	98
	2.5	7.0	7.5	14.5	15.0		
35L	2.0	7.0	8.5	17.5	19.0	170	115
	3.0	8.5	10.5	19.0	21.0		
42L	2.0	7.5	7.5	18.5	18.5	190	125
	3.0	9.0	10.5	20.0	21.5		
	4.0	9.0		20.0			

EO2-FORM assembly instructions

Tube preparation chart – Series S

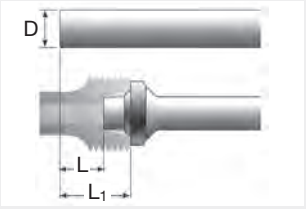

● Extra length

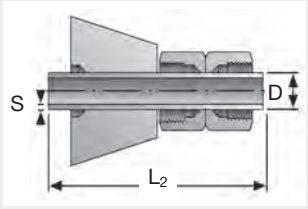

● Minimum tube length

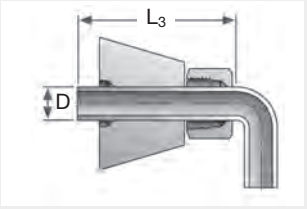

● Minimum straight length before bend

EO2-FORM/EO-KARRYFORM
min = 130 mm
EO2FORMPRO
min = 100 mm

● Minimum clearance of U-shape bends

Tube-OD Series	S Wall-thickness	L Steel ± 0.5	L Stainless Steel ± 0.5	L_1 Steel	L_1 Stainless Steel	L_2	L_3
6S	1.0	6.0	6.0	13.0	13.0	92	65
	1.5	6.0	6.0	13.0	13.0		
	2.0	5.5		12.5			
8S	1.0	5.5	5.5	12.5	12.5	92	68
	1.5	5.5	5.5	12.5	12.5		
	2.0	5.0		12.0			
10S	1.5	5.0	6.0	12.0	13.5	100	70
	2.0	5.0	6.0	12.0	13.5		
12S	1.5	5.0	6.5	12.5	14.0	100	72
	2.0	5.0	6.0	12.5	13.5		
	2.5	5.0	6.0	12.5	13.5		
	3.0	4.5	4.5	12.0	12.0		
16S	2.0	5.5	6.5	14.0	15.0	135	98
	2.5	5.5	6.5	14.0	15.0		
	3.0	5.0	6.5	13.5	15.0		
20S	2.0	7.0	7.0	17.5	18.5	155	112
	2.5	7.0	8.0	17.5	18.5		
	3.0	7.0	8.0	17.5	18.5		
	3.5	7.0		17.5			
25S	2.0	8.5	8.5	20.5	20.5	140	98
	2.5	8.5	9.0	20.5	21.0		
	3.0	8.0	9.5	20.0	21.5		
	4.0	8.5	9.5	20.5	21.5		
30S	3.0	8.5	9.5	22.0	23.0	165	122
	4.0	9.5	10.0	23.0	23.5		
	5.0	8.5	9.0	22.0	22.5		
38S	3.0	10.0	9.5	26.0	25.5	190	135
	4.0	10.0	11.0	26.0	27.0		
	5.0	11.0	12.5	27.0	28.5		
	6.0	11.5	12.5	27.5	28.5		
	7.0	11.5	12.5	27.5	28.5		

EO2-FORM assembly instructions

Tube forming with EO2-FORM F3/EO-KARRYFORM

- Reliable forming method
- Reliable process

1

⚠ Change tool only when drive switched off (button OFF)
⚠ Obey safety instructions
⚠ Do not operate machine without tooling

2

- Open doors to access tools and handling devices
- Tool handling devices are stored in middle on top

3

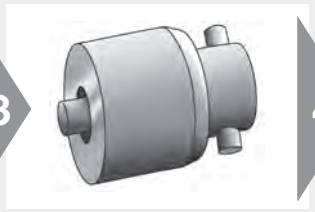

- Select suitable forming pin according to tube material, outer diameter and wall thickness

4

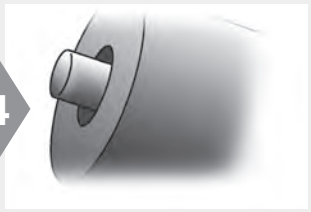

- Check forming pin for dirt, wear and damage

5

- Use magnetic holder to insert forming pin
- Turn clockwise to lock bayonet fixture

6

- Tilt magneto holder to remove handle

7

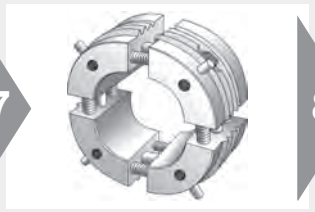

- Select suitable clamping die set according to tube outer diameter and material

⚠ Keep stainless tube clamping dies seperate from other tube materials to prevent contact corrosion

8

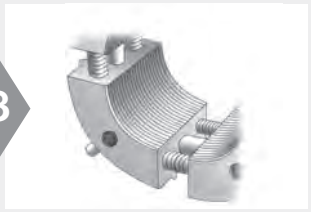

- Check clamping dies for dirt, wear and damage
- Use wire-brush to remove metal particles from grip surfac

9

- Use pistol to handle clamping die set
- Pull and hold handle to grab die set

10

- Insert clamping die set until it bottoms up (twist pistol for easy insertion)
- Release handle to fix die set

⚠ Never operate machine while pistol is inserted

11

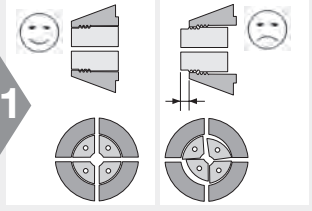

⚠ Front surfaces must be completely flat
⚠ Die segments must fit without gaps

⚠ Wear safety glasses

EO2-FORM assembly instructions

12

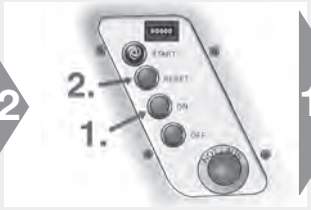

- Switch on drive (button ON)
- Each time the drive is switched on, the reset button (RESET) must be pressed first
- The automatic tool recognition is initiated

⚠ Clamping dies will close, reset button (RESET) must be held until it lights up

- Lighten of reset button (RESET) indicates “ready to start”

13

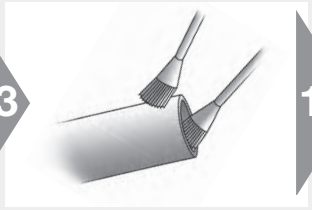

⚠ Make sure tube-end is free of burrs, chips and dirt Lubricate inside and outside of tube-end

- Use EO-NIROMONT for best performance

14

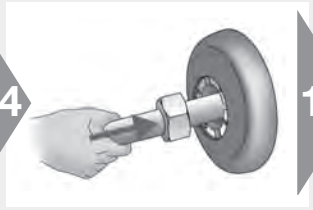

- Insert tube-end with nut into open tool until it firmly touches the stop at the end

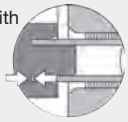

⚠ Press tube-end firmly into the tube stop

⚠ Do not turn tube-end anti-clockwise to prevent unlocking forming-pin

15

- Press and hold start button (☞ START) until tube is clamped
- Instead of start-button (☞ START), footswitch can be used

⚠ Hold tube firmly until clamping dies are closed

- Use support for long tubes

⚠ Do not reach into tool area while machine is working

16

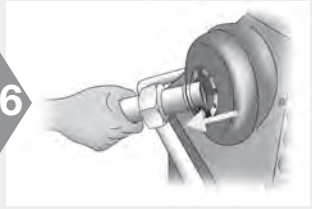

- Tube can be taken out after the clamping dies are open
- Reset button (RESET) lights up and the machine is ready for the next operation
- Check tools regularly (approx. 50 assemblies) for dirt and wear
- Remove tools for cleaning
- Clean clamping dies with wire brush
- Clean forming die using compressed air
- Replace worn-out tooling

EO2-FORM assembly instructions

Assembly check

- Check assembly result

⚠ Incorrect assemblies must be scrapped

Tube OD check

Tube ∅-Series	min ∅ [mm]	max ∅ [mm]
6-L/S	8.3	10.3
8-L/S	10.3	12.3
10-L	12.5	14.3
12-L	14.5	16.3
15-L	18.0	20.3
18-L	21.0	24.0
22-L	25.5	27.8
28-L	31.5	33.8
35-L	39.0	42.5
42-L	46.0	49.5
10-S	13.0	15.5
12-S	15.0	17.5
14-S	17.5	19.5
16-S	19.5	21.5
20-S	24.0	27.5
25-S	29.5	34.0
30-S	34.5	39.0
38-S	42.5*	47.0

*Ø 42.0 mm successfully tested with stainless steel tubes

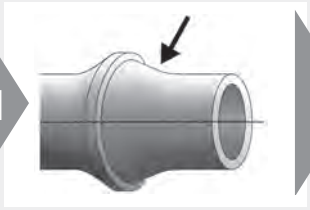

- Sealing surface (arrow) must be free of scratches and damage

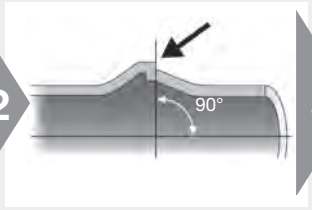

- Check contour: Contact surface for sealing ring (arrow) must be flat, at right angle to tube

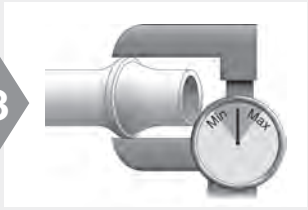

- Check outer diameter ∅ … **(see chart)**

⚠ Incorrect tube-ends must be scrapped. Tools must be cleaned and checked

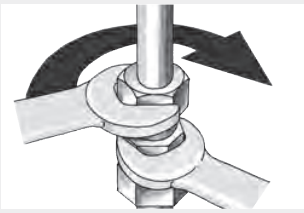

Installation

⚠ Tube must fit without tension

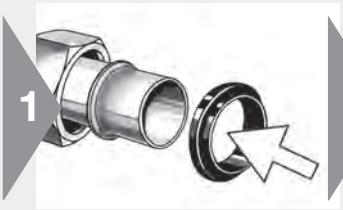

- Place sealing ring (DOZ) onto tube-end

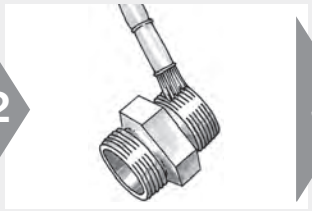

- Threads of stainless steel fittings must be lubricated
- EO-NIROMONT is a special high-performance lubricant for stainless steel fittings

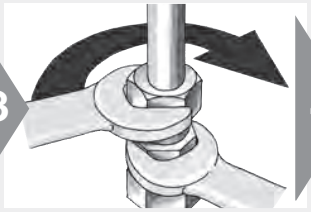

- Tube must fit without tension
- Assemble fitting until wrench-tight (without spanner extension)

⚠ The body must be held rigid

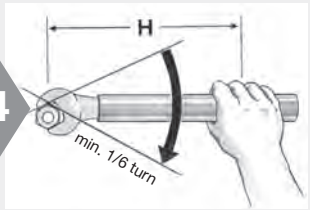

⚠ Then tighten fitting firmly by 1/6 turn (1 flat)

⚠ Recommended to use spanner extension for sizes over 20 mm O.D. **(see chart)**

⚠ Incorrect assembly reduces performance and reliability of the connection

Spanner length

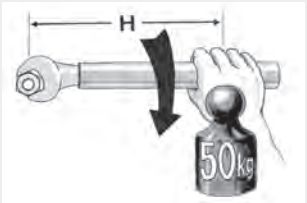

Size		Spanner length H [mm]
22-L		400
28-L	20-S	500
35-L	25-S	800
42-L	30-S	1000
	38-S	1200

Checking instructions for EO2-FORM tools

Forming pin and clamping dies for EO2-FORM machine

- ⚠ Use of damaged, worn or non-suitable tooling may result in fitting failure and damage of machine
- ⚠ Tools must be checked regularly, at least after 50 assemblies
- ⚠ Worn tools must be replaced
- ⚠ Use only genuine Parker tools
- ⚠ Tools must always be kept clean and lubricated

1

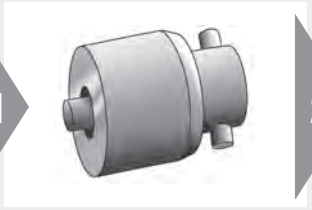

- Clean forming pin for checking
- Do not disassemble

2

- Visual check:
  Surface must be free of wear and damage
- Use air blowgun to remove chips and dirt

3

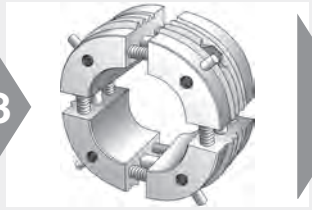

- Clean clamping pin for checking
- Do not disassemble
- Pins must not be loose or damaged

4

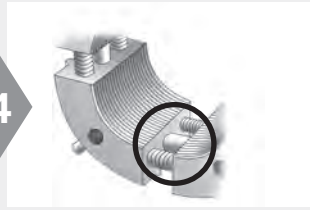

- Visual check:
  Grip surface must be clean and free of wear
- Use wire-brush to remove metal particles from grip surface
- Check springs and connection bolts

Weld fitting

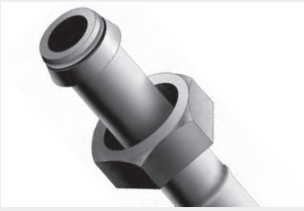

Weld fitting assembly

- EO weld nipple and weld fitting

⚠ Use weldable material

⚠ Depending on application or project specification, special requirements may apply for: Tube preparation, welding process, operator qualification, inspection of welding connection and surface finish

Tube preparation

- Cut and deburr thoroughly
- Do not assemble under tension

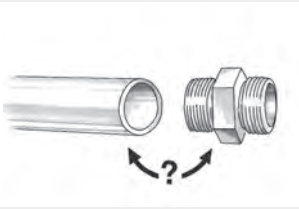

Material combinations

- Select suitable tube material

Fitting material	Tube specification
Steel	Weldable Steel
Stainless Steel	Weldable Stainless Steel

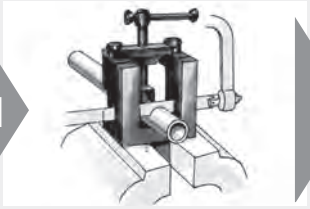

- Cut tube squarely
- max ±1° deviation

⚠ Do not use pipe cutters

- EO tube-cutting tool (AV) for manual cutting

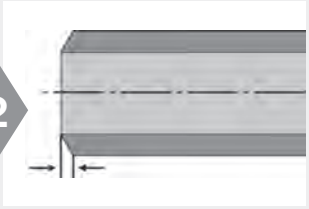

- Bevel tube-end similar to weld nipple bevel

Assembly

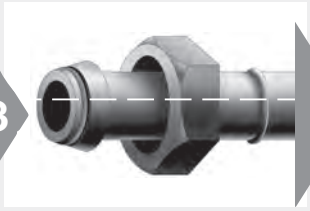

- Slide nut onto tube-end
- Weld fitting onto tube-end
- Fitting and tube must be aligned

⚠ Remove all elastomeric seals before welding

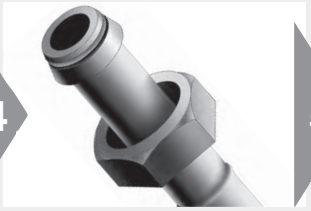

- Clean weld
- Calibrate inner diameter
- Check welding quality
- Surface protection if necessary

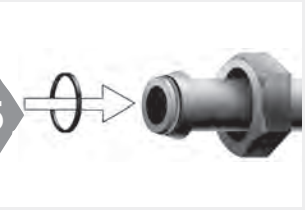

- Assemble O-ring
- Lubricate O-ring for easy assembly
- Avoid damage or twisting of O-ring

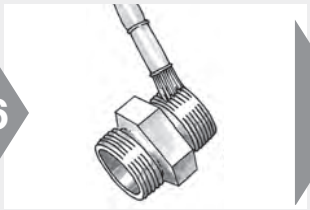

⚠ Threads of stainless steel fittings must be lubricated

⚠ Use EO-NIROMONT special high-performance lubricant for stainless steel fittings

- Assemble fitting until wrench-tight (without spanner extension)

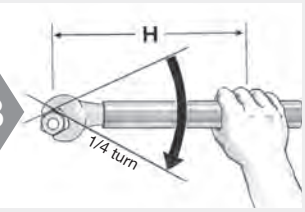

⚠ Then tighten fitting firmly by ¼ turn (1½ flats)

⚠ The body must be held rigid

O-Lok® assembly instructions

Tube selection

- Select suitable tube material

Steel tube		Stainless Steel tube	
Cold drawn seamless	Welded & redrawn	Cold drawn seamless	
NF A 49330	NF A 49341		
ISO 3304 R	DIN 2393	NF A 49341	
DIN 2391C pt 1	BS 3602/2	DIN 17458 DA/T3	
BS 3602 pt1	SAE J525	ASTM A 269	1.4571 on request
SAE J524			

Tube preparation

- Cut and deburr thoroughly

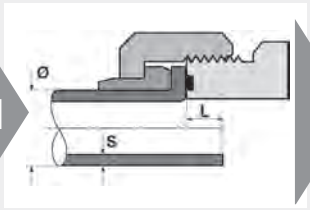

- Calculate tube length before cutting
- Add extra length “L”

- Minimum length of straight tube-ends **(see chart below)**

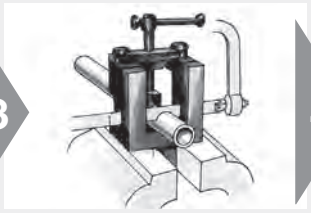

- Cut tube squarely
- max. ±1° deviation

⚠ Do not use pipe cutters

- Use tube-cutting tool AV for manual cutting

- Remove internal and external burrs
- max. chamfer 0.3 mm × 45°
- Recommendation: In-Ex Tube Deburring Tool 226

⚠ Proper deburring and cleaning of inner diameter essential for sealing surface quality

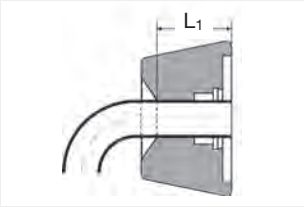

Metric tube [mm]		Minimum straight length	Extra length ~ L [mm] for Tube Wall thickness							
Tube ∅	Wall thickness	to start to bend L1 [mm]	1	1.5	2	2.5	3	3.5	4	5
6	1.0 – 1.5	40	4.5	5.5						
8	1.0 – 2.0	40	5.0	5.0						
10	1.0 – 2.0	40	2.5	4.0	3.5					
12	1.0 – 3.0	50	3.5	4.5	4.5	4.0	4.0			
14	1.5 – 2.0	50			5.0					
15	1.0 – 2.0	50		4.5	5.0					
16	1.5 – 3.0	50		3.0	3.0	3.0	2.5			
18	1.5 – 2.0	50		6.0	5.5					
20	2.0 – 3.5	50			3.5	4.0	4.0	3.5		
22	1.5 – 2.5	50			6.5	7.0				
25	2.0 – 4.0	50				4.0	4.5		4.0	
28	1.5 – 3.0	50			6.0	7.0				
30	2.0 – 4.0	50			5.0		5.0		5.0	
32	2.0 – 4.0	50					3.5		3.5	
35	2.0 – 3.0	50					7.0			
38	2.0 – 5.0	50					5.0		5.0	4.5
50	3.0	50					4.0			

Inch tube [inch]		Minimum straight length	Extra length ~ L [mm] Tube Wall thickness									
Tube ∅	Wall thickness	to start to bend L1 [mm]	0.028″	0.035″	0.049″	0.065″	0.083″	0.095″	0.109″	0.120″	0.134″	0.156″	0.188″
1/4″	0.020 – 0.065	40	4.5	5.0	4.0								
3/8″	0.020 – 0.095	40		3.5	3.5	4.0	4.0	4.0					
1/2″	0.028 – 0.095	50		3.5	3.5	3.5	3.5	3.5					
5/8″	0.035 – 0.120	50			4.0	4.0	3.0	4.5	4.0	4.5			
3/4″	0.035 – 0.156	50			4.0	4.0	3.0	2.5	3.5	4.0	4.5		
1″	0.035 – 0.188	50				3.5	3.5	2.5	4.5	4.5	5.0		
1 1/4″	0.049 – 0.188	50					4.0	3.0	3.0	3.0	4.0	4.5	4.5
1 1/2″	0.049 – 0.220	50				4.5	4.5	5.0	5.0	5.0	5.0	6.0	5.5
2″	0.083 – 0.120	50					4.0	4.0		5.0			

O-Lok® assembly instructions

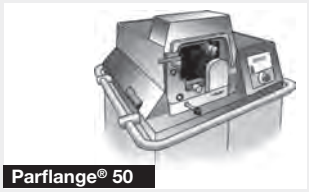

Parflange® 50

Parflange® 1025

O-Lok® machine flanging and assembly

- Preferred method
- Most efficient method
- Parflange® recommended

1

Parflange® machines:
- Select flaring pin according to tube dimensions
- Use special “SS” pin for stainless steel tube
- Pin must be clean and free of wear, damage and metal particles
- Keep flaring pin clean and lubricate regularly

2

- Select flanging dies according to tube dimensions
- Use special “SS” dies for stainless steel tube to avoid contact corrosion
- Grip surface must be clean and free of wear
- Use only genuine Parker tooling for flanging O-Lok®

3

- Load pin into machine
- Ensure lubricating system is filled with EO-NIROMONT (LUBSS)

4

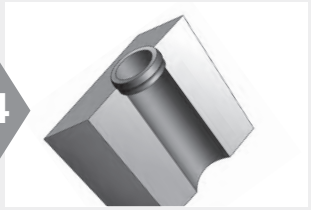

- Place sleeve in lower die half
- Locate upper die half onto lower half

5

- Place the dies in the die housing
- 50: Close safety cover

6

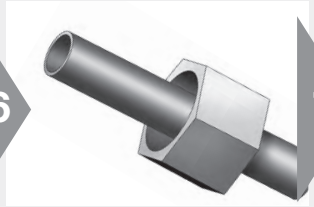

- Slide nut onto tube before flanging!
- Open threads towards machine

7

⚠ Press tube firmly into the die against the tube stop

8

- Pull down the handle to clamp the tube in the dies (1025)
- 1040/50 die clamping automatic in cycle
- Press button to start flanging cycle

⚠ Keep hands clear off the working area

9

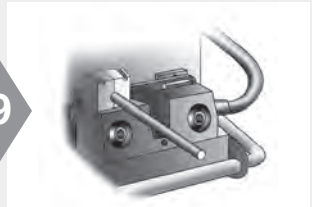

- Parflange® 1025: Unclamp the dies
- Remove tube from machine
- Use die separator to free tube
- Parflange® 1040/50: Die unclamping is automatic

O-Lok® assembly instructions

Checking of flange

- Clean flange for inspection

⚠ Check sealing surface for cracks, burrs, scratches and pitting

- Dimensional check of the flare
- Flare O.D. should not exceed outside sleeve diameter
- Flare O.D. should not be less than smaller diameter of front of sleeve
- When in doubt, measure

Tube O.D.		∅ D	
mm	In.	min. [mm]	max. [mm]
6	1/4″	12.10	12.75
8		14.85	15.75
10	3/8″	14.85	15.75
12	1/2″	18.00	18.90
14		22.20	23.45
15		22.20	23.45
16	5/8″	22.20	23.45
18		26.60	27.85
20	3/4″	26.60	27.85
22		32.95	34.20
25	1″	32.95	34.20
28		39.35	40.55
30		39.35	40.55
32	1 1/4″	39.35	40.55
35		47.25	48.50
38	1 1/2″	47.25	48.50
50	2″	58.90	60.60

Installation in fitting

⚠ Steel fittings:
No thread lubrication
Stainless steel fittings:
⚠ O-ring and thread lubrification required

- EO-NIROMONT is a special high-performance lubricant for stainless steel fittings

- Thread nut onto body
- Tighten until no relative movement between the components
- Mark body and nut as quality check

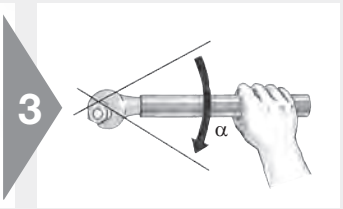

- Tighten to recommended torque level
- Recommended: Tighten with spanner the number of flats indicated α
- 1 flat = 60°

⚠ The body must be held rigid

Tightening recommendation

				recommended		**reference**	
Metric tube [mm]	Inch tube [Inch]	SAE dash size	SAE thread	α flats from wrench resistance method		Assembly torque Nm -0% + 10%	
				Tube	Swivel	Steel	Stainless Steel
6	1/4“	–4	9/16-18	1/4 - 1/2	1/2 - 3/4	25	32
8	3/8“	–6	11/16-16	1/4 - 1/2	1/2 - 3/4	40	50
10	3/8“	–6	11/16-16	1/4 - 1/2	1/2 - 3/4	40	50
12	1/2“	–8	13/16-16	1/4 - 1/2	1/2 - 3/4	65	70
14	5/8"	–10	1-14	1/4 - 1/2	1/2 - 3/4	80	100
15	5/8"	–10	1-14	1/4 - 1/2	1/2 - 3/4	80	100
16	5/8“	–10	1-14	1/4 - 1/2	1/2 - 3/4	80	100
18	3/4“	–12	1 3/16-12	1/4 - 1/2	1/3 - 1/2	115	145
20	3/4“	–12	1 3/16-12	1/4 - 1/2	1/3 - 1/2	115	145
22		–16	1 7/16-12	1/4 - 1/2	1/3 - 1/2	150	190
25	1“	–16	1 7/16-12	1/4 - 1/2	1/3 - 1/2	150	190
28	1 1/4"	–20	1 11/16-12	1/4 - 1/2	1/3 - 1/2	190	235
30	1 1/4"	–20	1 11/16-12	1/4 - 1/2	1/3 - 1/2	190	235
32	1 1/4“	–20	1 11/16-12	1/4 - 1/2	1/3 - 1/2	190	235
35	1 1/2“	–24	2-12	1/4 - 1/2	1/3 - 1/2	245	305
38	1 1/2“	–24	2-12	1/4 - 1/2	1/3 - 1/2	245	305
50	2"	–32	2 1/2-12	–	–	–	490

* “Flats From Wrench Resistance” Method for steel and stainless steel

O-Lok® assembly instructions

O-Lok®: Replacement of O-ring

- Parker CORG assembly tool should be used for O-Lok® fitting with captive O-ring groove (O-Lok®)

- Insert the O-ring into the slot located on the side of the tool
- Position the open end of the tool over the tube-end of the fitting
- Push the piston of the tool until the O-ring is released into the fitting groove

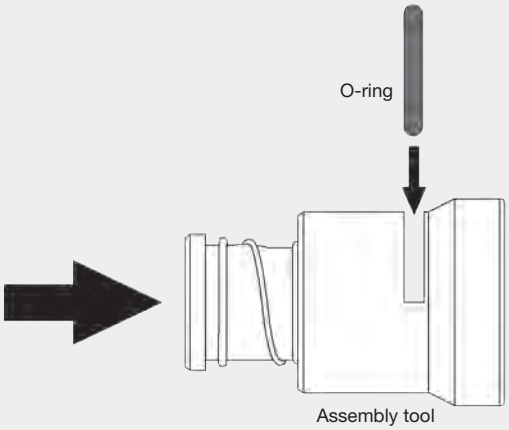

- Function of Parker CORG assembly tool

Triple-Lok® assembly instructions

Tube selection

- Select suitable tube material

Steel tube		Stainless steel tube
Cold drawn seamless	Welded & redrawn	Cold drawn seamless
NF A 49330	NF A 49341	
ISO 3304 R	DIN 2393	NF A 49341
DIN 2391C pt 1	BS 3602/2	DIN 17458 DA/T3
BS 3602 pt1	SAE J525	ASTM A 269
SAE J524		

Tube preparation

- Cut and deburr thoroughly

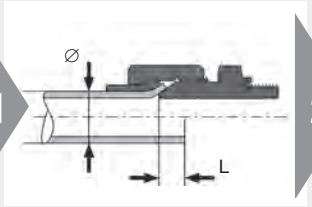

1
- Calculate tube length before cutting
- Add extra length "L"

2
- Minimum length L_1 of straight tube-ends **(see chart below)**

3
- Cut tube squarely
- max. ±1° deviation

⚠ Do not use pipe cutters

- Use tube cutting tool AV for manual cutting

4
- Remove internal and external burrs
- max. chamfer 0.3 mm × 45°
- Recommendation: In-Ex Tube Deburring Tool 226

⚠ Proper deburring and cleaning of inner diameter essential for sealing surface quality

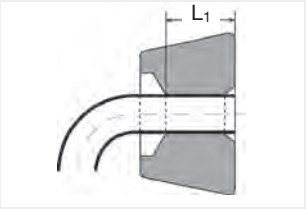

Tube preparation chart

Metric tube [mm]		Inch tube [inch]		Extra length	Minimum straight length	Flare ∅
Tube ∅	Wall thickness	Tube ∅	Wall thickness	~ L [mm]	to start to bend L1 [mm]	∅ D [mm]
6	1.0 – 1.5	1/4″	0.020 – 0.065	2.0	40	8.6 – 9.7
8	1.0 – 1.5	5/16″	0.020 – 0.065	2.0	40	10.2 – 11.3
10	1.0 – 1.5	3/8″	0.020 – 0.065	2.0	42	11.7 – 12.7
12	1.0 – 2.0	1/2″	0.028 – 0.083	2.5	43	16.0 –17.3
14	1.5 – 2.0			2.5	52	19.3 – 20.2
15	1.0 – 2.5			2.5	52	19.3 – 20.2
16	1.5 – 2.5	5/8″	0.035 – 0.095	2.5	52	19.3 – 20.2
18	1.5 – 3.0			3.0	56	23.4 – 24.7
20	2.0 – 3.0	3/4″	0.035 – 0.109	3.0	57	23.4 – 24.7
22	1.5 – 3.0			3.0	58	26.5 – 27.8
25	2.0 – 3.0	1″	0.035 – 0.120	3.0	58	29.7 – 31.0
28	1.5 – 3.0			4.0	65	37.6 – 38.9
30	2.0 – 3.0			4.0	65	37.6 – 38.9
32	2.0 – 3.0	1 1/4″	0.049 – 0.120	4.0	65	37.6 – 38.9
35	2.0 – 3.0			4.0	70	43.2 – 45.3
38	2.0 – 4.0	1 1/2″	0.049 – 0.120	4.0	70	43.2 – 45.3
42*	2.0 – 3.0			5.0	80	52.0 – 54.8
50	2.0 – 3.5	2″	0.058 – 0.134	5.0		59.2 – 61.2

* Tube OD 42 mm:
• 1015: not suitable
• KARRYFLARE: special flaring pin KARRYFLARE/FPIN42 required

Triple-Lok® assembly instructions

37° Flaring
Parflange®-Process

- Preferred method
- Most efficient method
- Parflange® recommended

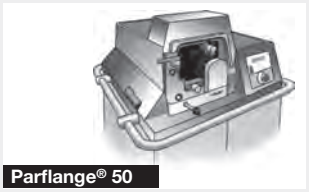

Parflange® 50

Parflange® 1025

1

- Select flaring pin according to tube dimensions
- Use special “SS” pin for stainless steel tube
- Pin must be clean and free of wear and damage
- Load tooling into machine
- Keep flaring pin clean and lubricate regularly

2

- Select flaring dies according to tube dimensions
- Use special “SS“ dies for stainless steel tube
- Grip surface must be clean and free of wear
- Use only genuine Parker tooling for flaring Triple-Lok®

3

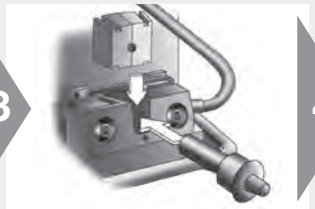

- Load tooling into machine
- Keep sliding surfaces clean and lubricated
- 50: Close safety cover
- Ensure lubricant system is filled with EO-NIROMONT (LUBSS)

4

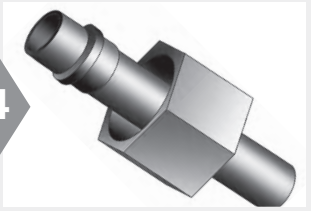

- Slide nut and sleeve as shown onto the tube-end

5

- ⚠ Press tube firmly into the die against the tube stop
- Parflange® 1025: Operate clamping lever
- Parflange® 1040/50: Automatic tube clamping

6

- Hold tube firmly
- Press start button
- ⚠ Keep hands clear off the working area

7

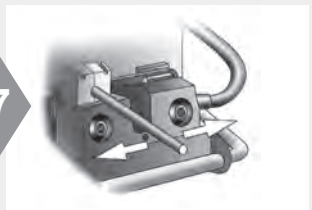

- Parflange® 1025: Unclamp the dies
- Parflange® 1040/50: Die unclamping is automatic
- Remove tube from machine
- Use die separator to free tube

Triple-Lok® assembly instructions

37° Flaring with EOMAT/KARRYFLARE/Parflare ECO

- Preferred method
- Most efficient method
- Parflange® recommended

EOMAT UNI

KARRYFLARE

1

- Flaring pin is integrated in flaring block
- Pin must be clean and free of wear and damage
- Keep flaring pin clean
- KARRYFLARE: Flaring pin for 42 mm tube O.D. must be fitted with flat face on top

2

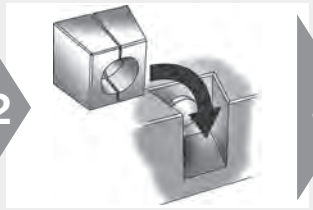

- Select flaring dies according to tube O.D.
- Grip surface must be clean and free of wear
- Use only genuine Parker tooling for flaring Triple-Lok®
- Keep sliding surfaces clean and lubricated

3

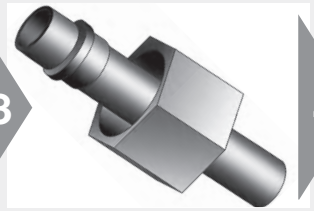

- Slide nut and sleeve as shown onto the tube-end

4

- Lubricate tube-end inside
- Lubricant EO-NIROMONT recommended

5

⚠ Press tube firmly into the die against the tube stop
- KARRYFLARE: Close valve on handpump
- KARRYFLARE: Keep lid closed

6

- EOMAT UNI: Adjustment according to pressure on machine
- EOMAT III/A: Menu selection (FLARE)
- KARRYFLARE: Refer to chart on machine
- Non-EOMAT-machines: check suitability

7

- Hold tube firmly
- EOMAT: Press and hold start button
- KARRYFLARE: Operate handpump until assembly pressure is reached

⚠ Keep hands clear off the working area

⚠ KARRYFLARE: Do not exceed max pressure 400 bar

8

- KARRYFLARE: Open valve on handpump
- Remove tube from machine
- Use die separator to free tube

Triple-Lok® assembly instructions

Checking the flare

- Clean flare for inspection
- ⚠ Visual check sealing surface for cracks, burrs, scratches and pitting

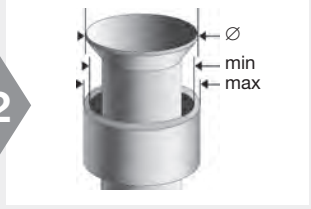

- Dimensional check of the flare
- Flare O.D. should not exceed outside sleeve diameter
- Flare O.D. should not be less than smaller diameter of front of sleeve
- When in doubt, measure

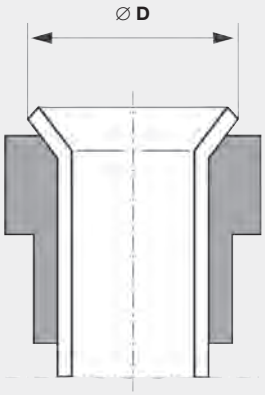

Tube O.D.		∅ D	
mm	inch	Min.	Max.
6	1/4″	8.6	9.7
8	5/16″	10.2	11.3
10	3/8″	11.7	12.7
12	1/2″	16.0	17.3
14		19.3	20.2
15		19.3	20.2
16	5/8″	19.3	20.2
18		23.4	24.7
20	3/4″	23.4	24.7
22	7/8″	26.5	27.8
25	1″	29.7	31.0
28		37.6	38.9
30		37.6	38.9
32	1 1/4″	37.6	38.9
35		43.2	45.3
38	1 1/2″	43.2	45.3
42		52.0	54.8
50	2″	59.2	61.2

Installation

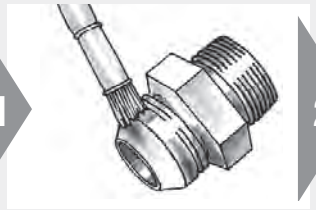

- Steel fittings: No lubrication
- ⚠ Stainless steel fittings: Lubrication required
- Use EO-NIROMONT special high-performance lubricant for stainless steel fittings

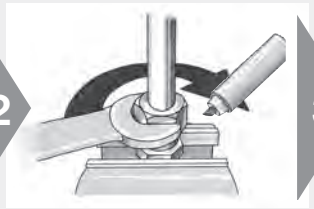

- Thread nut onto body
- Tighten to full metal contact (wrench tight)
- Mark body and nut as quality check
- Tighten with spanner the number of flats indicated
- ⚠ The body must be held rigid

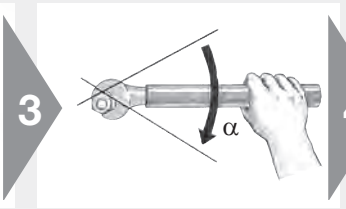

- Use spanner extension for larger fittings (28 mm)

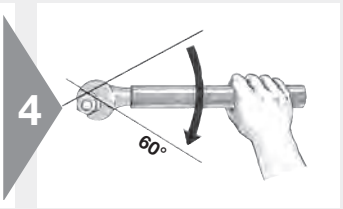

- 1 flat = 60°

Tightening recommendation			recommended				reference	
Metric tube [mm]	Inch tube [Inch]	SAE thread	α flats from wrench tight for steel		α flats from wrench tight for stainless steel		Assembly torque Nm -0% + 10%	
			Tube	Swivel	Tube	Swivel	Steel	Stainless steel
6	1/4“	7/16-20	2	2	2	2	18	30
8	3/8“	1/2-20	2	2	2	2	20	40
10	3/8“	9/16-18	2	1.5	1.5	1	30	60
12	1/2“	3/4-16	2	1.5	1.5	1	57	115
14	5/8"	7/8-14	1.5	1.5	1.5	1	81	145
15	5/8"	7/8-14	1.5	1.5	1.5	1	81	145
16	5/8“	7/8-14	1.5	1.5	1.5	1	81	145
18	3/4"	1 1/16-12	1.5	1.25	1.25	1	114	180
20	3/4“	1 1/16-12	1.5	1.25	1.25	1	114	180
22		1 3/16-12	1.5	1.25	1	1	136	225
25	1“	1 5/16-12	1.5	1	1	1	160	255
28	1 1/4"	1 5/8-12	1	1	1	1	228	295
30	1 1/4"	1 5/8-12	1	1	1	1	228	295
32	1 1/4“	1 5/8-12	1	1	1	1	228	295
35	1 1/2"	1 7/8-12	1	1	1	1	265	345
38	1 1/2“	1 7/8-12	1	1	1	1	265	345
42		2 1/4-12	1	1	1	1	340	400

Checking instructions for O-Lok®/Triple-Lok® tools

Tools for Parflange® machines

- ⚠ Use of damaged, worn or non-suitable tooling may result in fitting failure and damage of machine
- ⚠ Tools must be checked regularly, at least after 50 assemblies
- ⚠ Worn tools must be replaced
- ⚠ Use only genuine Parker tools
- ⚠ Tools must always be kept clean and lubricated

1

- Clean pin for checking

2

- Visual check:
  Surface must be free of wear and damage

3

- Clean die halves for checking
- ⚠ Do not disassemble
- Fixing pins must not be loose or damaged

4

- Visual check:
  Grip surface must be clean and free of wear
- Use wire-brush to remove metal particles from grip surface

Adjustment of Parflange® dies

- Parflange® dies can be adjusted to correct deviations of flare diameter
- ⚠ Re-adjustment of dies will not help if general machine setting is incorrect or components are damaged (worn tube-stop, lose screw connections)

1

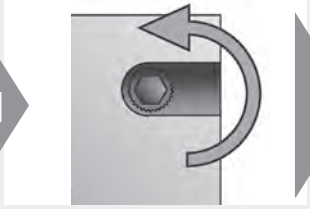

- To reduce the flare diameter, turn the screws anti-clockwise
- ⚠ Re-adjust both screws simultaneously

2

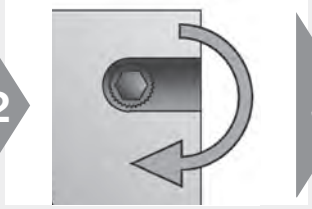

- To increase the flare diameter, turn the screws clockwise
- ⚠ Re-adjust both screws simultaneously
- 1 click = approx. 0.05 mm ∅

3

- Adjust the screws in small stages
- Then check flare diameter
- ⚠ Lock screws to prevent misadjustment

Ferulok® assembly instruction

Tube preparation

- Cut and deburr thoroughly
- Do not assemble under tension

1

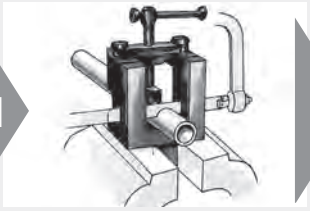

- Cut tube squarely
- max ±1° deviation

⚠ Do not use pipe cutters

- EO tube-cutting tool (AV) for manual cutting

2

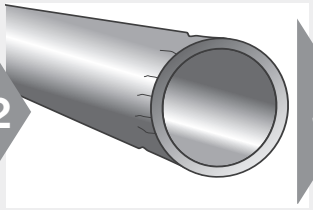

- Don't deform tube end at cutting or bending
- Marks or scratches can result in leakage
- Thin wall and soft tubes are very sensitive

3

- Remove internal and external burrs
- max. chamfer 0.3 mm x 45°

Ferrule Preset

Prior to final installation the Ferulok® fitting requires a pre-setting operation that creates a bite by the ferrule into the outer surface of the tubing. Pre-setting can be accomplished by two different methods: hydraulically, using a Hyferset tool or a Hydra-Tool, or manually, using a hardened Ferruleset tool or the fitting body.

Pre-setting using Ferulset tool or fitting body

Ferulset pre-setting tools are made from hardened steel and are recommended over the fitting body because they can be used repeatedly to perform the pre-set operation. The fitting body can only be used once for pre-setting and should be used during final installation with the pre-set tube line.The following steps are required for proper pre-set of the ferrule using the Feruleset tool or fitting body.

1

- Lubricate thread and cone of Ferulset tool (or fitting body)

2

- Slip nut and ferrule over deburred tube end. Be sure the long, straight end of the ferrule points toward tube end

3

- Lubricate ferrule with system fluid or a compatible lubricant

4

- Bottom tube end firmly on internal shoulder of Ferulset tool (or fitting body)

5

- Manually screw nut onto Ferulset tool or fitting body until finger tight

6

- Make reference mark on nut and tube

7

- Hold tube steady against internal shoulder of Ferulset tool or fitting body and tighten nut an additional **1 3/4 turns**

8

- Loosen nut and check for proper pre-set. Use the following inspection criteria.

Ferulok® assembly instruction

Pre-setting with Hyferset Tool or Hydra-Tool

Pre-setting with hydraulic equipment (Hyferset or Hydra-tool) is preferred for fittings larger than size 8 or large production quantities in any size.

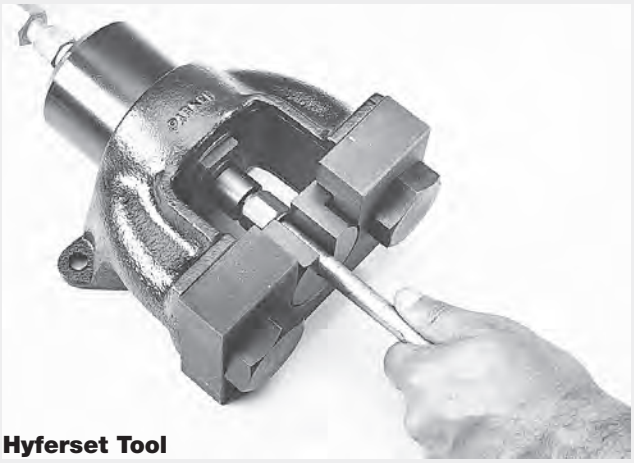

Hyferset Tool

Pre-set inspection

All Ferulok fitting presets must be disassembled and inspected for correct ferrule pre-set before final installation. The following detailed inspection procedures must be followed regardless of the method used to pre-set the ferrule to the tube. (Refer to the figure below for the following five inspection points.

1. A ridge of metal (A) has been raised above the tube surface to a height of at least 50 % of the ferrule‘s leading edge, completely around the tube.
2. While the leading edge of the ferrule may be coined flat (B) there is a slight bow to the balance of the pilot section (C).
3. The tail or back end of the ferrule is snug against the tube (D).
4. There is a slight indentation around the end of the tube (E) that indicates the tube was bottomed in the tool or fitting during pre-setting.
5. Avoid rotating the ferrule. Steel ferrules should not be capable of moving back and forth along the tube beyond the bite area (a stainless steel ferrule will move more than steel because of its spring back characteristics.

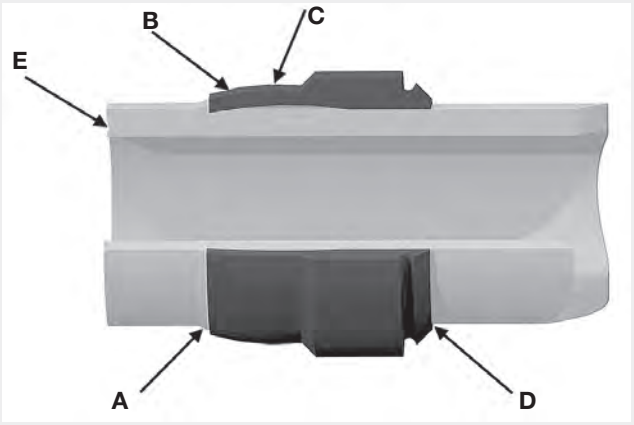

Installation

If the fitting body was used for pre-setting the ferrule, complete the final installation with the **same** fitting body. Following the pre-setting and inspection, select the compatible fitting body and lubricate the threads. Tighten the nut until a sudden and noticeable wrench resistance is achieved. Then wrench an additional 1/6 to 1/4 turn to complete the final assembly. Final assembly of swivel nut fittings is achieved by turning the nut 3/4 turn from wrench resistance postion.

Ferulok® assembly instruction

Hydra-tool Pre-setting pressures for Ferulok® fittings[1)2)3)]

Tube Size	Wall Thickness - Steel							Wall Thickness Stainless Steel						
	0.035	0.049	0.065	0.083	0.095	0.109	0.120	0.035	0.049	0.065	0.083	0.095	0.109	0.120
4	300	300	500	600	600	600		300	300	500	700	700	700	
6	300	500	600	700	700	700	700	300	500	700	700	700	700	800
8		500	700	800	900	1.000	1.000		600	700	1.000	1.000	1.100	1.100
10			700	900	1.000	1.100	1.100			800	1.000	1.100	1.300	1.300
12			900	1.000	1.100	1.100	1.300			1.000	1.100	1.300	1.300	1.500
14			1.000	1.100	1.100	1.300	1.500			1.000	1.300	1.300	1.500	1.600
16				1.100	1.300	1.500	1.600				1.500	1.500	1.600	1.600
20					1.500	1.600	1.800					1.600	2.000	2.000
24					1.800	2.000	2.300					2.100	2.300	2.300
32					2.800	2.900	3.300					3.100	3.300	3.300

1. These values are provided as a guide only and normally will produce a satisfactory bite.
2. Ferulok® pre-setting dies are positive stop dies. Use of above pressures is optional.
3. For wall thicknesses greater than those listed, contact the Tube Fittings Division.

Hyferset Pre-setting for Ferulok® fittings[1)]

Tube Size	Wall thickness - Steel							Wall thickness - Stainless Steel						
	0.035	0.049	0.065	0.083	0.095	0.109	0.120	0.035	0.049	0.065	0.083	0.095	0.109	0.120
4	800	900	1400	1800	1.800	1.800		900	1.000	1.500	2.000	2.000	2.000	
6	900	1.400	800	2.000	2.000	2.000	2.200	1.000	1.500	2.000	2.000	2.000	2.000	2.500
8		1.600	2.000	2.500	2.700	3.000	3.200		1.800	2.200	3.000	3.000	3.500	3.500
10			2.200	2.700	3.000	3.500	3.500			2.500	3.000	3.500	4.000	4.000
12			2.700	3.000	3.500	3.500	4.000			3.000	3.500	4.000	4.000	4.500
14			3.000	3.500	3.500	4.000	4.500			3.000	4.000	4.000	4.500	5.000
16				3.500	4.000	4.500	5.000				4.500	4.500	5.000	5.000
18				4.000	4.500	4.500	5.000				4.500	5.000	5.000	5.500
20					4.500	5.000	5.500					5.000	6.000	6.000
24					5.500	6.000	7.000					6.500	7.000	7.000
28					7.000	7.500	8.000					7.500	8.000	8.500
32					8.500	9.000	10.000					9.500	10.000	10.000

1. Ferulok® pre-setting dies are positive stop dies. Use of above pressures is optional.

Fitting assembly

kovaz.cz

Table of contents

Port connections M F4

Port connections BSPP F5

Port connections UNF F6

Port connections TAPER F7

Adjustable fittings with locknut F8

EO swivels F9

Triple-Lok® / O-Lok® swivels F10

Flanges F11

Replacement / DA F12

Tube bending F13

Tube line fabrication guide F14

kovaz.cz

Port connections

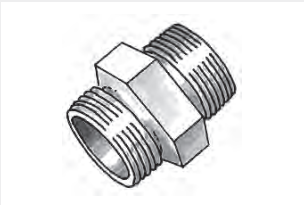

Assembly of metric straight port connections

- Metric Thread
  DIN ISO 6149-2/3
  ISO 9974-2/3
  DIN 3859-T2

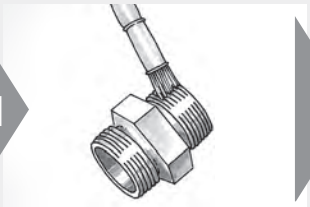

⚠ Threads of stainless steel fittings must be lubricated

- EO-NIROMONT is a special high-performance lubricant for stainless steel fittings

- Screw in until handtight

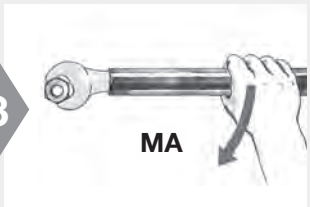

- Then tighten according to chart

Assembly torques for zinc plated steel fittings with metric thread in ports made of steel

Product	Tube O.D.	Straight male stud fittings with port tapping						Non return valves	EO Banjo fittings			Adjustable ends		Blanking plugs	
		Thread size T	Form A for sealing washer	Form B with face	Form E with ED-sealing	Form F with O-Ring-sealing	Form G with O-Ring and retaining ring	RHV/RHZ Form E with ED-sealing	WH/TH	SWVE	DSVW	ISO 9974 O-Ring and retaining ring	DIN ISO 6149-2/3 O-Ring	oiled VSTI-ED Form E with ED-sealing	oiled VSTI-OR Form F with O-Ring-sealing
Series		mm	Nm	Nm	Nm	Nm	Nm	Nm	Nm	Nm	Nm	Nm	Nm	Nm ⚠	Nm
EO L Triple-Lok®	6	M 10x1.0	9	18	18	15	18	18	18	25	30	18	15	12	18
	8	M 12x1.5	20	30	25	25	35	25	45	40	40	25	25	25	30
	10	M 14x1.5	35	45	45	35	45	35	55	55	50	40	35	35	40
	12	M 16x1.5	45	65	55	40	55	50	80	65	65	55	40	50	50
	15	M 18x1.5	55	80	70	45	70	70	100	90	85	70	45	65	70
	18	M 22x1.5	65	140	125	60	160	125	140	130	130	90	60	90	100
	22	M 26x1.5	90	190	180	100*	250	145	320	140	190	180	100	135	
	28	M 33x2.0	150	340	310	160	310	210	360		245	310	160	225	310
	35	M 42x2.0	240	500	450	210	450	360	540		305	450	210	360	330
	42	M 48x2.0	290	630	540	260	540	540	700		365	540	260	360	420
EO S O-Lok®	6	M 12x1.5	20	35	35	35		35	45	40	40	35	35	25	35
	8	M 14x1.5	35	55	45	45		45	55	55	50	45	45	35	45
	10	M 16x1.5	45	70	70	55		55	80	65	65	55	55	50	55
	12	M 18x1.5	55	110	90	70		70	100	90	85	70	70	65	70
	14	M 20x1.5	55	150	125	80		100	125	120	105	90	90	80	80
	16	M 22x1.5	65	170	135	100		125	135	130	130	90	100	90	100
	20	M 27x2.0	90	270	180	170		135	320	150	200	190	170	120	170
	25	M 33x2.0	150	410	310	310		210	360		245	310	310	225	310
	30	M 42x2.0	240	540	450	330		360	540		305	450	330	360	330
	38	M 48x2.0	290	700	540	420		540	700		365	540	420	360	420

Tolerance of tightening torques listed in above table: +10 %
Note: Lubricate stud with hydraulic oil before screwing in! *Thread M 27.0

⚠ Assembly in ports made of materials, which are strongly differing in strength and friction from steel, usually requires modified torques.

A reduction of torque is always required, when the turning angle from fingertight to the recommended torque is more than 30°!

In this case it is recommended to reduce the torque:

Port material	Hardness	Torque reduction by
Steel, with use of high performance lubrication (e.g. additive to hydraulic oil)	All	10 %
Ductile cast iron (e.g. GGG 50)	All	10 %
Aluminium	HB 150	15 %
	HB 125	20 %
	HB 100	30 %
	< HB 100	35 %

Port connections

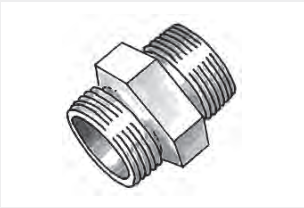

Assembly of BSPP straight port connections

- BSPP Thread G
  ISO 1179-I
  DIN 3859-T2

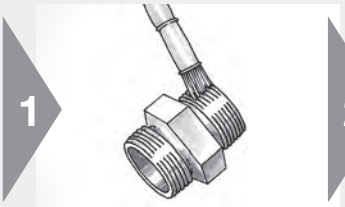

⚠ Threads of stainless steel fittings must be lubricated

- EO-NIROMONT is a special high-performance lubricant for stainless steel fittings

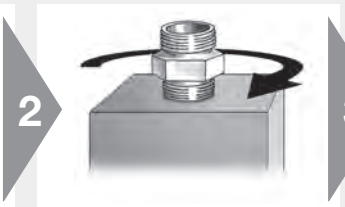

- Screw in until handtight

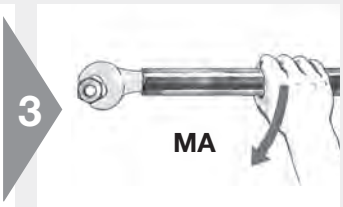

- Then tighten according to chart

Assembly torques for zinc plated steel fittings with BSPP thread in ports according to ISO 1179 made of steel

Product	Tube O.D.	Straight male stud fittings with port tapping: Thread size T	Form A for sealing washer	Form B with cutting-face	Form E with ED-sealing	Form G with O-Ring and retaining ring	Non-return valves: RHV/RHZ Form E with ED-sealing	EO Banjo fittings: WH/TH	SWVE	DSVW	Adjustable ends: ISO 1179-3 O-Ring and retaining-ring	Blanking plugs: oiled VSTI-ED Form E with ED-sealing ⚠
Series		**Inch**	**Nm**	**Nm**	**Nm**	**Nm**	**Nm**	**Nm**	**Nm**	**Nm**	**Nm**	**Nm**
EO L Triple-Lok®	6	G 1/8 A	9	18	18	18	18	18	20	25	18	13
	8	G 1/4 A	35	35	35	35	35	45	45	50	35	30
	10	G 1/4 A	35	35	35	35	35	45	45	50	35	(30)
	12	G 3/8 A	45	70	70	70	50	70	70	70	6	60
	15	G 1/2 A	55	140	90	90	85	120	100	110	90	80
	18	G 1/2 A	65	100	90	90	65	120	100	110	9	(80)
	22	G 3/4 A	90	180	180	180	140	230	140	185	180	140
	28	G 1 A	150	330	310	310	190	320		255	310	200
	35	G 1 1/4 A	240	540	450	450	360	540		315	450	400
	42	G 1 1/2 A	290	630	540	540	540	700		365	540	450
EO S O-Lok®	6	G 1/8 A									25	13
	6	G 1/4 A	35	55	40		45	45	45	50	40	30
	8	G 1/4 A	35	55	40		45	45	45	50	40	(30)
	10	G 3/8 A	45	90	80		60	70	70	70	60	60
	12	G 3/8 A	45	90	80		60	70	70	70	60	(60)
	14	G 1/2 A	65	150	115		145	120	100	110	90	80
	16	G 1/2 A	65	130	115		100	120	100	110	90	(80)
	20	G 3/4 A	90	270	180		145	230	145	185	180	140
	25	G 1 A	150	340	310		260	320		255	310	200
	30	G 1 1/4 A	240	540	450		360	540		315	450	400
	38	G 1 1/2 A	290	700	540		540	700		365	540	450

Tolerance of tightening torques listed in above table: +10 %
Note: Lubricate stud with hydraulic oil before screwing in.

⚠ Assembly in ports made of materials, which are strongly differing in strength and friction from steel, usually requires modified torques.

A reduction of torque is always required, when the turning angle from fingertight to the recommended torque is more than 30°!

In this case it is recommended to reduce the torque:

Port material	Hardness	Torque reduction by
Steel, with use of high performance lubrication (e.g. additive to hydraulic oil)	All	10 %
Ductile cast iron (e.g. GGG 50)	All	10 %
Aluminium	HB 150	15 %
	HB 125	20 %
	HB 100	30 %
	< HB 100	35 %

Port connections

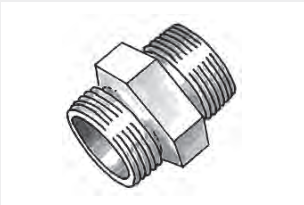

Assembly of SAE straight port connections

- UN/UNF thread
  ISO 11926-2/3

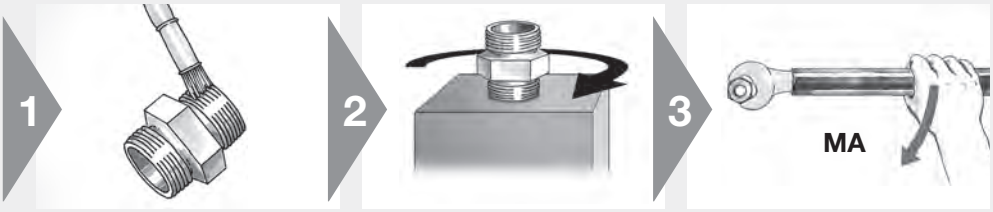

⚠ Threads of stainless steel fittings must be lubricated

- EO-NIROMONT is a special high-performance lubricant for stainless steel fittings

- Screw in until handtight

- Then tighten according to chart

Assembly torques for zinc plated steel fittings with UNF thread in ports according to ISO 11926 made of steel

Product	Thread size T ISO 11926	Series EO / Triple-Lok® and O-Lok®	
		Assembly torque non-adjustable end with O-ring sealing	Assembly torque adjustable end with O-ring sealing
Series	inch	Nm	Nm
EO L Triple-Lok®	7/16-20 UN(F)	23	18
	1/2-20 UN(F)	28	28
	9/16-18 UN(F)	34	34
	3/4-16 UN(F)	60	55
	7/8-14 UN(F)	115	80
	1 1/16-12 UN(F)	140	100
	1 5/16-12 UN(F)	210	150
	1 5/8-12 UN(F)	290	290
	1 7/8-12 UN(F)	325	325
EO S O-Lok®	7/16-20 UN(F)	35	20
	1/2-20 UN(F)	40	40
	9/16-18 UN(F)	46	46
	3/4-16 UN(F)	80	80
	7/8-14 UN(F)	135	135
	1 1/16-12 UN(F)	185	185
	1 5/16-12 UN(F)	270	270
	1 5/8-12 UN(F)	340	340
	1 7/8-12 UN(F)	415	415

Tolerance of tightening torques listed in above table: + 10 %
Note: Lubricate stud with hydraulic oil before screwing in!

⚠ Assembly in ports made of materials, which are strongly differing in strength and friction from steel, usually requires modified torques.

A reduction of torque is always required, when the turning angle from fingertight to the recommended torque is more than 30°!

In this case it is recommended to reduce the torque:

Port material	Hardness	Torque reduction by
Steel, with use of high performance lubrication (e.g. additive to hydraulic oil)	All	10 %
Ductile cast iron (e.g. GGG 50)	All	10 %
Aluminium	HB 150	15 %
	HB 125	20 %
	HB 100	30 %
	< HB 100	35 %

Port connections

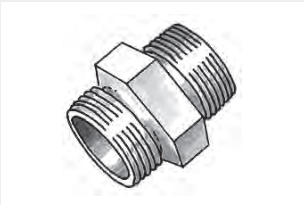

Assembly of tapered thread port connections

- NPT / NPTF thread
  ANSI / ASME B 1.20.1 – 1983

1

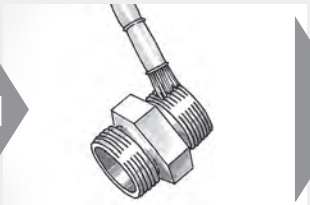

⚠ Threads of stainless steel fittings must be lubricated

- EO-NIROMONT is a special high-performance lubricant for stainless steel fittings

2

- Apply teflon tape (1.5 layer) to the taper stud end and screw in handtight

3

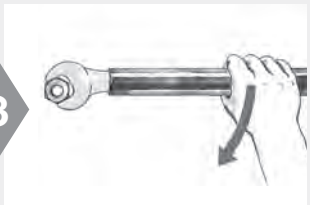

- Then tighten according to chart

Tightening of NPT / NPTF thread

Größe	Thread T NPT/F	Assembly TFFT Turns
4	1/8-27 NPT/F	2.0-3.0
6	1/4-18 NPT/F	2.0-3.0
8	3/8-18 NPT/F	2.0-3.0
10	1/2-14 NPT/F	2.0-3.0
12	3/4-14 NPT/F	2.0-3.0
16	1-11.5 NPT/F	1.5-2.5
20	1 1/4 -11.5 NPT/F	1.5-2.5
24	1 1/2-11.5 NPT/F	1.5-2.5

In the EO fitting range only **NPT** threads are manufactured.
In the **Triple-Lok®** and **O-Lok®** fitting range for **steel**
NPTF threads are used, and NPT for stainless steel components.estellt.

Adjustable fittings with locknut

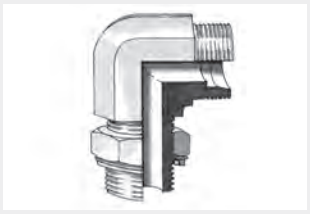

Assembly of the orientable joint

(EO: e.g. WEE, VEE, TEE, LEE - Triple-Lok® / O-Lok®: C4, V4, S4, R4)

⚠ Assembly steps must be done in right order

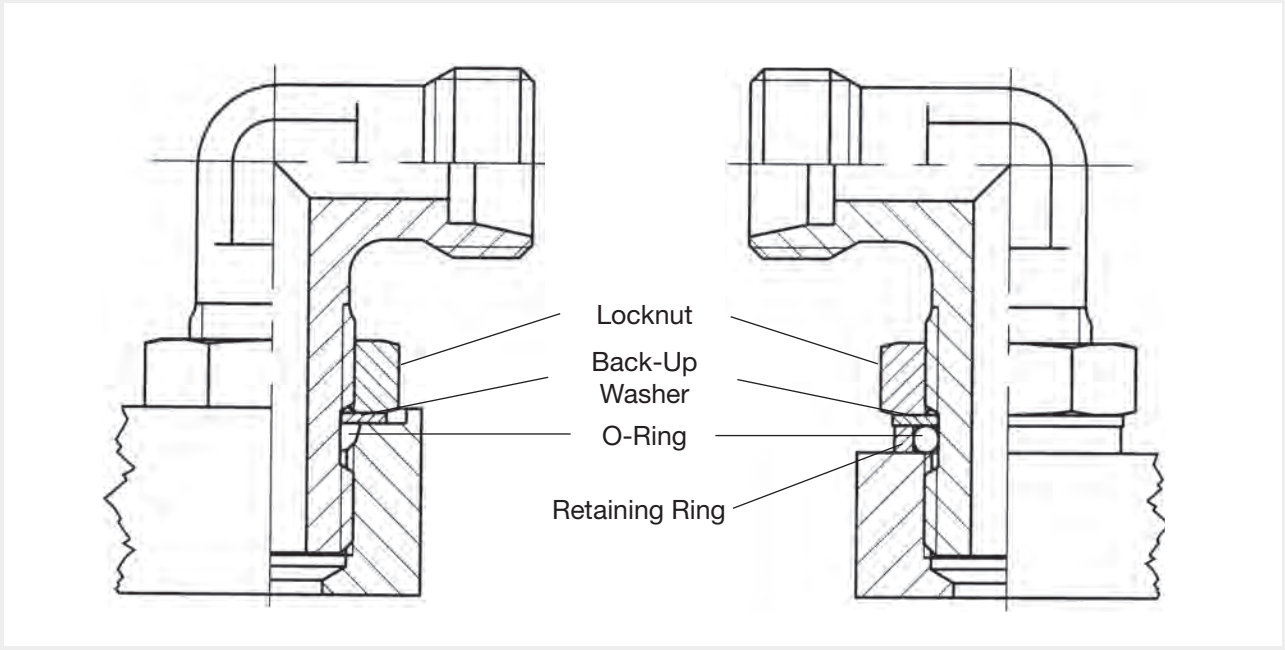

- Fitting *without* Retaining Ring for ISO 6149 or UN/UNF ports
- Fitting *with* Retaining Ring for BSPP or Metric Parallel ports with wide or SMALL spot faces

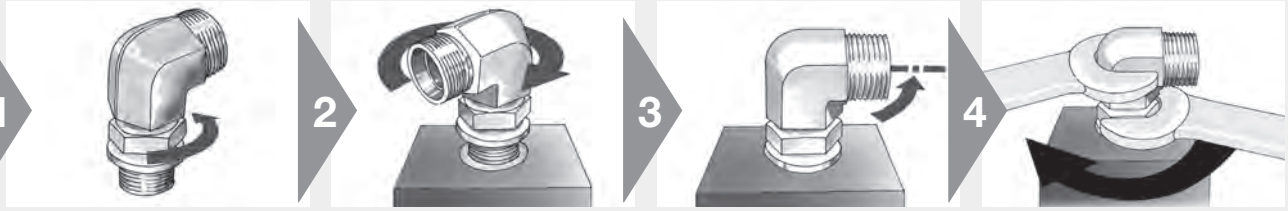

- Screw back locknut as far as possible

⚠ O-ring and back-up washer in the non-threaded section should be placed nearest to the locknut

- Lubricate the O-ring
- With BSPP and metric parallel version slip retaining ring over the O-ring

- Screw the fitting in the port by hand until retaining ring or back-up washers bottom

- To adjust direction, turn back to a maximum of one full turn

- Screw locknut handtight
- Assemble locknut until wrenchtight
- Hold body in desired position and tighten locknut

EO swivels

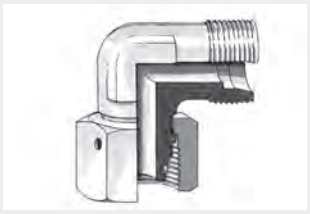

Assembly of EO swivel nut fittings

(e.g. EW, ET, EL, EGE, RED, VKA, SKA)

- Final assembly of swivel nut fittings must be made in appropriate fittings

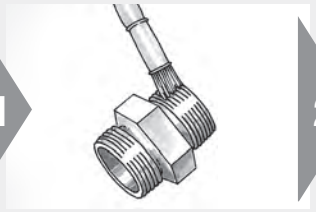

⚠ Threads of stainless steel fittings must be lubricated

- EO-NIROMONT is a special high-performance lubricant for stainless steel fittings

- Screw on nut by hand until handtight

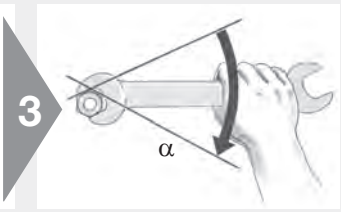

⚠ Then tighten fitting firmly by ¼ turn (1½ flats)

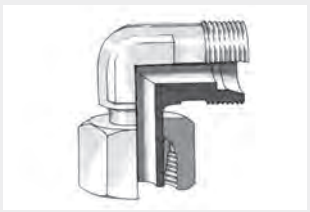

Final assembly of factory pre-assembled EO-standpipe fittings

(e.g. EVW, EVT, EVL, EVGE, KOR)

- For all fittings delivered pre-assembled from the factory the final assembly is performed in the appropriate fitting body

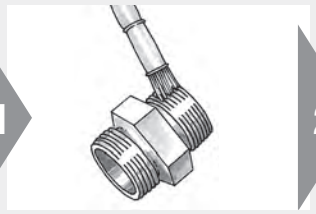

⚠ Threads of stainless steel fittings must be lubricated

- EO-NIROMONT is a special high-performance lubricant for stainless steel fittings

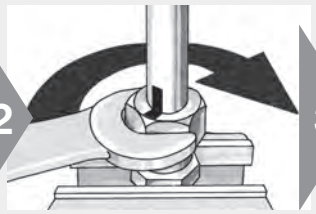

- Assemble fitting until wrench tight (without spanner extension)

⚠ Mark position of nut

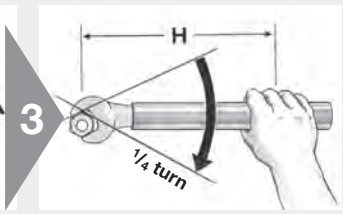

⚠ Then tighten fitting firmly by ¼ turn (1½ flats)

⚠ Recommended to use spanner extension for sizes over 20 mm O.D. **(see chart)**

⚠ The body must be hold rigid

Spanner length

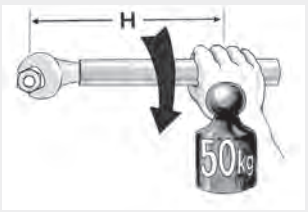

Size		Spanner length H [mm]
18-L	16-S	300
22-L		400
28-L	20-S	500
35-L	25-S	900
42-L	30-S	1200
	38-S	1500

Triple-Lok® / O-Lok® swivels

Assembly of Triple-Lok® and O-Lok® swivel nut fittings

e.g.: Triple-Lok®: C6MX, V6MX, R6MX, S6MX, BBMTX
O-Lok®: C6MLO, V6MLO, S6MLO, R6MLO, A0EL6

- Final assembly of swivel nut fittings must be made in appropriate fittings

1

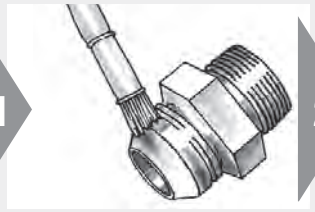

⚠ Threads of stainless steel fittings must be lubricated

- EO-NIROMONT is a special high-performance lubricant for stainless steel fittings

2

- Screw on nut by hand until handtight

3

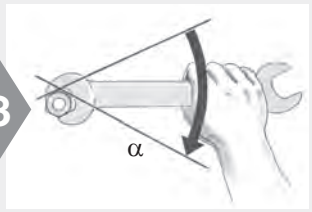

- Then tighten according to chart

⚠ The body must be hold rigid

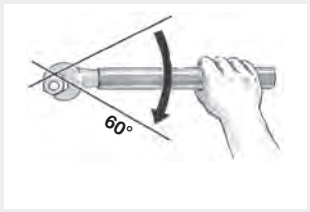

- one flat = 60°

Assembly torques for O-Lok® and Triple-Lok® swivel nut fittings

O-Lok®

Size	Metric tube **mm**	Inch tube **inch**	Thread UN/UNF	**Nm**[1)]	**FFWR**
4	6	1/4″	9/16-18	25	1/2
6	8	5/16″	11/16-16	40	1/2
6	10	5/16″	11/16-16	55	1/2
8	12	1/2″	13/16-16	55	1/2
10	14, 15,16	5/8″	1-14	115	1/2
12	18, 20	3/4″	1 3/16-12	130	1/2
16	22, 25	1″	1 7/16-12	150	1/2
20	28, 30, 32	1 1/4″	1 11/16-12	190	1/2
24	35, 38	1 1/2″	2-12	245	1/2
32	50	2″	2 1/2-12	490	1/2

Triple-Lok®

Size	Metric tube **mm**	Inch tube **inch**	Thread UN/UNF	**Nm**[1)]	**FFFT**
4	6	1/4″	7/17-20	15	2
5	8	5/16″	1/2-20	20	2
6	10	3/8″	9/16-18	45	1 1/4
8	12	1/2″	3/4-16	60	1
10	14, 15, **16**	5/8″	7/8-14	75	1
12	18, **20**	3/4″	1 1/16-12	100	1
16	22, **25**	7/8″	1 5/16-12	150	1
20	**30**, 32	1 1/4″	1 5/8-12	180	1
24	38	1 1/2″	1 7/8-12	200	1
28	42		2 1/4-12	220	1
32		2″	2 1/2-12	250	1

Assembly torques shown in chart are for **non-lubricated carbon steel zinc plated components.**
For stainless steel fittings, lubricate all mating surfaces and tighten to upper end of torque tolerance.
Recommended assembly torques are for connections consisting of all Parker manufactured components.

[1]) Tolerance of tightening torques max. +10 %

Flanges

Assembly of flanges

- SAE flange adapters
- SAE 4 bolt flanges
- Gear pump flanges
- CETOP square flanges

1

- Make sure sealing surfaces are free of burrs, nicks, scratches or any contamination
- Lubricate the O-ring with system fluid or compatible lubricant

2

- Position flange and clamp halves
- Place lock washers on bolts and bolt through clamp halves

3

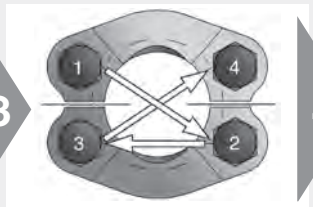

- Hand tighten bolts
- Torque bolts in diagonal sequence in small increments to the appropriate torque level listed in chart

4

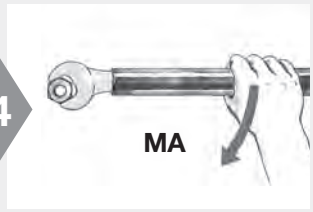

- Tighten bolts according to chart

Torques for bolts, see page N8!

Index

Replacement of an EO Bite type connection

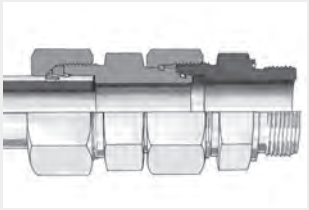

Distance piece adapter DA

- EO distance piece adapters allow replacement of bite type connections on existing pipework easily or retrofitting using EO-2
- The existing tubes can be re-used

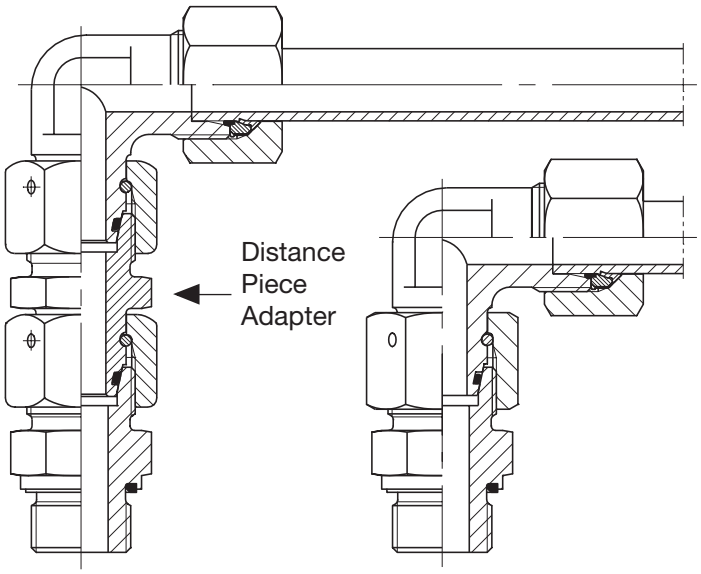

- Use as an extension for stacked assemblies

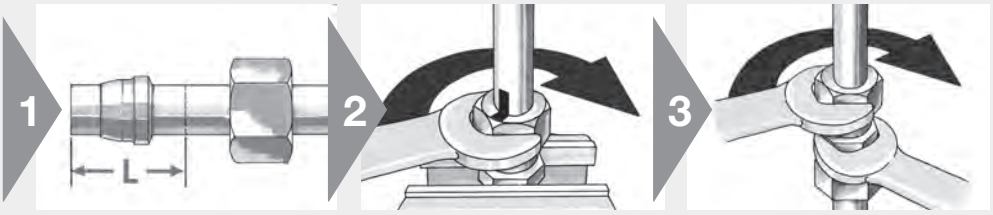

- Cut length L off tube-end (see “DA” chapter I)
- Scrap obsolete nut

- Assemble new EO-2 functional nut or EO PSR/DPR and nut

- Thread on
- Then tighten distance piece adapter onto tube-end

⚠ The body must be hold rigid

Tube bending

Instructions for EO hand-bending equipment

- For on-site piping jobs
- Not for mass production

BAV 6/12

BAV 6/18

BAV 20/25

1

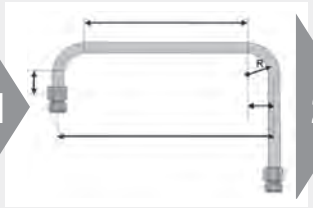

⚠ Think the whole process through and plan each individual step before starting

⚠ First bend and then cut ends to length

- Gather all dimensions like minimum straight lengths, extra length for flaring, bending radius, tube lengths for bows, etc.

2

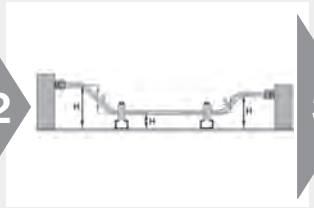

- Consider steps
- Plan for clamping

3

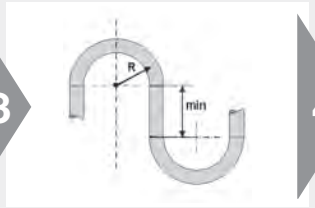

- Check bending equipment specifications for limitations

4

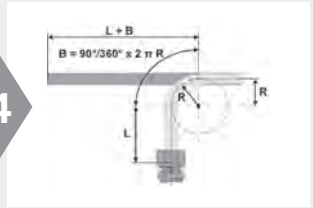

- Start with first elbow
- Leave tube-end longer if in doubt

5

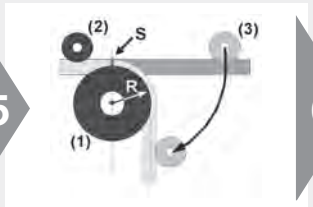

⚠ Mark start of bend on tube (S)

- Adjust tube between bending roll (1), clamping roll (2) and pressure roll (3)
- Bend tube by pulling lever

6

- Check bend angle
- Correct angle if necessary
- Gather all dimensions for next bending operation

7

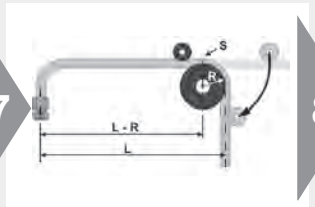

⚠ Mark start of bend on tube

- Continue bending
- Check and correct each result before starting next bend

8

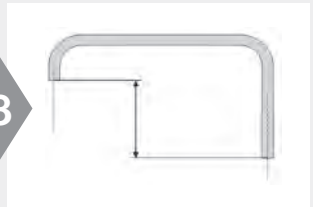

- After the last bend, check tube for angles and dimensions
- Now cut both tube-ends to correct length
- Make sure that tube fits without tension

F

Tube line fabrication guide for leak free systems

Every hydraulic, pneumatic and lubrication system requires some form of tube fabrication and fitting installation for completion. Proper fabrication and installation are essential for the overall efficiency, leak free performance, and general appearance of any system.

After sizing the tube lines and selecting the appropriate style of fitting, consider the following in the design of your system:

1. Accessibility of joints
2. Proper routing of lines
3. Adequate tube line supports
4. Available fabricating tools

- Keep tube lines away from components that require regular maintenance:

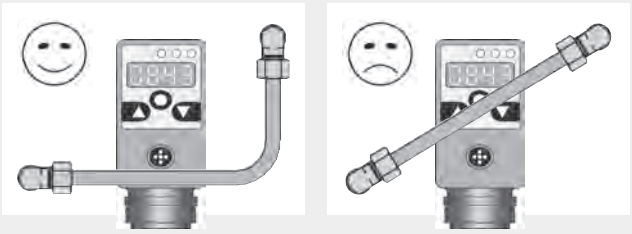

- Right-angled – parallel – clear
- Have a neat appearance and allow for easy trouble-shooting, maintenance and repair:

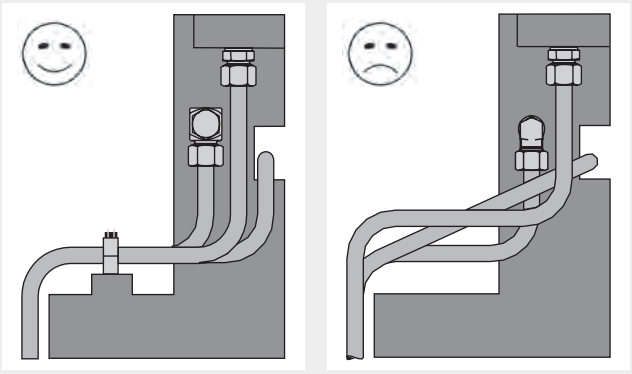

- Example for tube to hose connection:

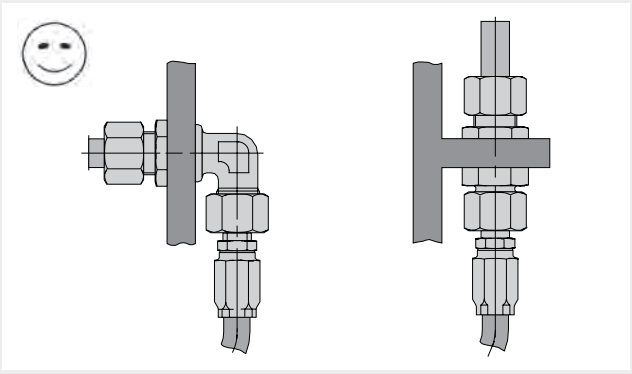

Tube line fabrication guide for leak free systems

- Do not use tube lines to support other tubes
- Always fix tubes onto a rigid point with tube clamps
- Do not use cable channels to support tubes

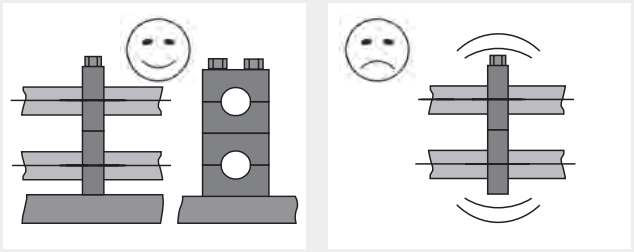

- Use appropriate tube clamps:

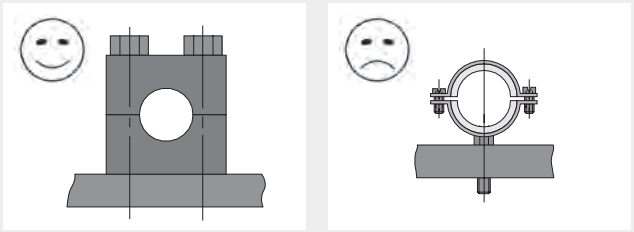

- Avoid excessive strain on joint:
  A strained joint will eventually leak

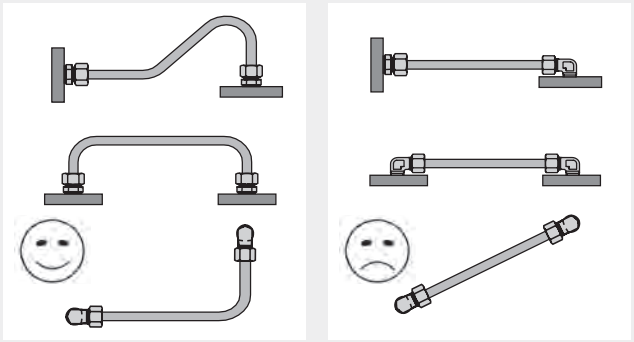

- Allow for expansion effects

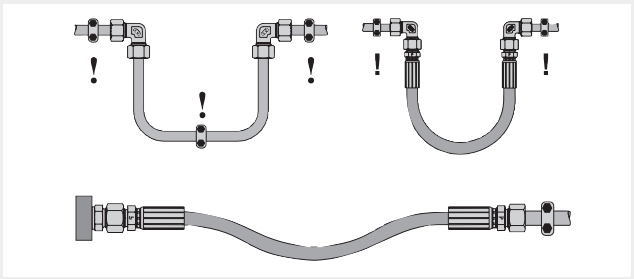

- Avoid short tube length:

⚠ Short tube lengths increase chance of fatigue fractures

- Use adapter GZR or swivel connector for swivel fittings instead of short tube lengths

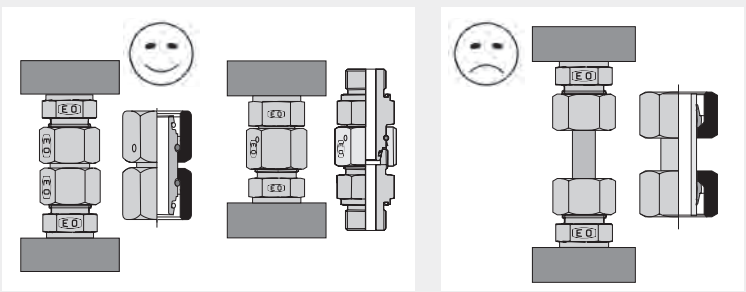

Tube line fabrication guide for leak free systems

- Support against actuating forces:

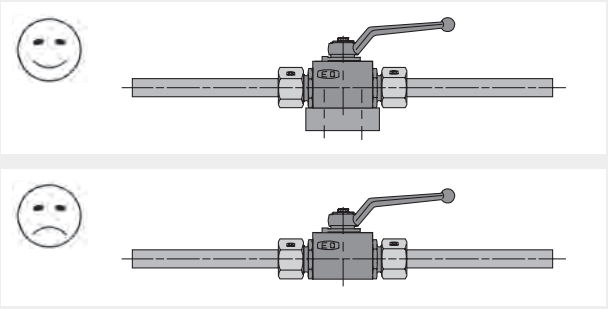

Recommended tools for tube line fabrication:

Cutting:

EO Tube cutting tool AV

EO Combined tube bending and cutting tool BAV

Tube cutters:
Steel: Type Kloskut;
Stainless Steel: Type 635 B-EX,
Type 218 B-SS Tru-Kut Sawing Vice

Deburring:

Parker deburring tool no. 226 DEBURR

Bending:
EO Combined tube bending and cutting tool BAV
EO Tube bending tool BV 6/18, BV 20/25
EO Tube bending tool BVP (programmable)

Tube lines have to be supported in certain distances:
Use sufficient tube clamps to support weight
Use sufficient tube clamps to protect joints from vibration

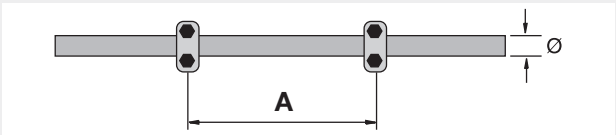

∅ [mm]	A [m]
6.0 – 12.7	1.0
12.7 – 22.0	1.2
22.0 – 32.0	1.5
32.0 – 38.0	2.0
38.0 – 57.0	2.7
57.0 – 75.0	3.0
75.0 – 76.1	3.5
76.1 – 88.9	3.7
88.9 – 102.0	4.0
102.0 – 114.0	4.5
114.0 – 168.0	5.0
168.0 – 219.0	6.0
219.0 – 324.0	6.7
324.0 – 356.0	7.0
356.0 – 406.0	7.5

Vibration has to be eliminated near by the connectors:

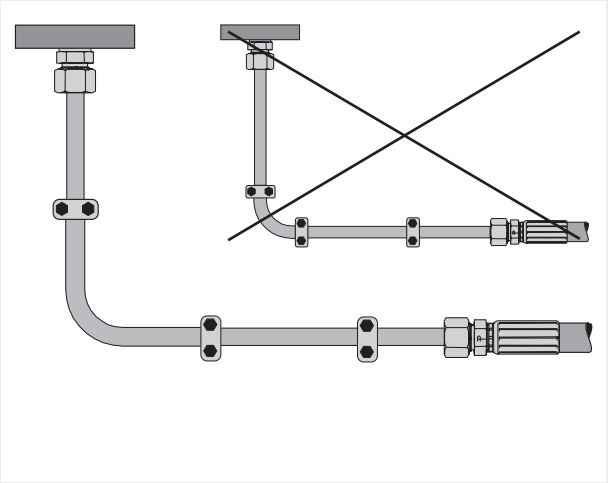

The clamp pitches corresponding to respective outside pipe diameters are standard for static loads.

Allow expansion and contraction. Do not hamper expansion and contraction near by tube bends.

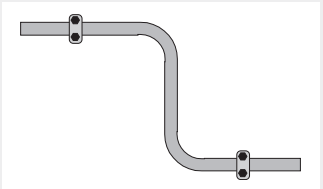

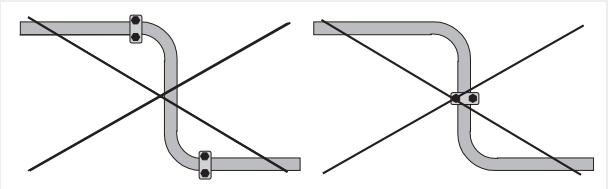

Trouble shooting guide

DPR/PSR Problem	Probable cause	Suggested solution
Leak	Insufficiently tightened, shallow bite	Tighten the nut according to correct number of turns, direct assembly only for maintanance/repair
		Use correct spanners and spanner extensions espe-cially for larger sizes and stainless steel fittings, use of recommended pre-assembly machines
		Mark nut and body to indicate correct assembly
		Use recommended lubrication
		Use of pre-assembly machines e.g. EO-KARRYMAT, EOMAT ECO, EOMAT UNI
		Pre-assemble joints away from installation to ensure proper bite
		Check visible collar
	Tube not bottomed into fitting shoulder	Cut tube to correct length
		Observe min. straight length before tube bend
		Use hacksaw and guide not a plumbing – style tube cutter
		Carefully deburr tube end – no heavy chamfers
		Push tube firmly into cone
		Check visible collar
		Make sure tube is lubricated at assembly
	Damaged fitting	Check for damage, replace damaged parts
		Handle all components carefully
	Contamination between sealing surfaces	Keep all components clean
	Hidden crack	Check for cracks, replace if necessary
	Mismatch of components	Select all components according to system application and product specification
		Use genuine Parker components
	Phantom leak, from assembly lubricant	Carefully identify proper source of leak
		Don't over use lubricant
Tube fractured behind the nut	Fatigue failure of tube under vibration	Review final tightening process, undertightening reduces vibration resistance
		Stress free installation
		Proper use of clamps
		Bulkhead connection and hose to isolate joints from vibration
		Make sure that operating conditions (pressure, corrosion, temperature, pressure peaks …) do not exceed fitting performance
Crack	Insufficiently tightened, shallow bite	Tighten the nut according to correct number of turns
		Use correct spanners and spanner extensions especially for larger sizes and stainless steel fittings
		Mark nut and body to indicate correct assembly
		Use recommended lubrication
		Pre-assemble joints away from installation to ensure proper bite
		Check visible collar

Kovak.cz

DPR/PSR Problem	Probable cause	Suggested solution
Crack	Severe working conditions	Make sure that operating conditions (pressure, corrosion, temperature, pressure peaks, …) do not exceed fitting performance
Tube blow out	Standpipe fitting, improper final assembly	Use swivel nut fitting
	Cold welded threads on stainless steel fittings	Use “EODUR” stainless steel fittings from Parker (with silver plated nut threads) and always lubricate threads with EO Niromont fluid (not hydraulic oil)
	Use of worn or unsuitable pre-assembly tools	Check tools regularly and replace worn tools
		Keep tooling clean and oiled plus check cone regularly with “KONU” cone templates every 50 assemblies
	Tube not bottomed into fitting shoulder	Cut tube to correct length
		Observe min. straight length before tube bend
		Use hacksaw and guide not a plumbing – style tube cutter
		Carefully deburr tube end – no heavy chamfers
		Push tube firmly into cone
	Severe working conditions	Check visible collar
		Make sure that operating conditions (pressure, corrosion, temperature, pressure peaks, flow rate, …) do not exceed fitting performance
		Check visible collar
	Ring installed in wrong direction	Install ring in proper orientation
		Use pre-assembled fitting or EO-2
		Always check assembly before final installation
	Steel ring used on stainless steel tube	Use stainless steel bite rings for stainless steel tube, **preassembly necessary**
	Stainless steel fitting not pre-assembled	Pre-assemble joint away from installation
		Use specified preassembly tools/machines
	Fitting body used as preassembly tool	Use specified preassembly tools, machine preset pre-ferred
Short tube end fracture	Fatigue failure	Use swivel nut adapter (GZ …)

EO-2 Problem	Probable cause	Suggested solution
Leak	Insufficiently tightened, shallow bite	Use of pre-assembly machines e. g. EO-KARRYMAT, EOMAT ECO, EOMAT UNI
	Insufficiently tightened	Use correct spanners and spanner extensions especially for larger sizes and stainless steel fittings
		Use recommended lubrication
		Pre-assemble joints away from installation to ensure proper bite
		Use original EO pre-assembly tools
		Check closed gap
	Tube not bottomed into fitting shoulder	Cut tube to correct length
		Observe min. straight length before tube bend

EO-2 Problem	Probable cause	Suggested solution
Leak	Tube not bottomed into fitting shoulder	Use hacksaw and guide not a plumbing – style tube cutter
		Use EO-2 MOK for big sizes
		Carefully deburr tube end – no heavy chamfers
		Push tube firmly into cone
	Damaged fitting	Check for damage
		Handle all components carefully
	Damage to fitting cone	Make sure tube is bottomed at assembly
	Contamination between sealing surfaces	Keep all components clean
	Hidden crack	Check for cracks, replace if necessary
	Mismatch of components	Select all components) according to system application and product specification
		Use genuine Parker components
	Phantom leak from assembly lubricant	Carefully identify proper source of leak
		Don't over use lubricant
	Sealing ring (DOZ) missing	Use plugs for transport of preassembled tubes. Check assembly before final installation
Tube fractured behind the nut	Fatigue failure of tube under vibration	Stress free installation
		Proper use of clamps
		Bulkhead connection and hose to isolate joints from vibration
	Severe working conditions	Make sure that operating conditions (pressure, corrosion, temperature, pressure peaks…) do not exceed fitting performance
Crack	Insufficiently tightened	Use correct spanners and spanner extensions especially for larger sizes and stainless steel fittings
		Use recommended lubrication
		Pre-assemble joints away from installation to ensure proper bite
		Use original EO preassembly tools
		Check closed gap
Tube blow out	Cold welded threads on stainless steel fittings	Use "EODUR" stainless fittings from Parker (with silver plated nut threads) and always lubricate threads with EO Niromont fluid (not hydraulic oil)
	Tube not bottomed into fitting shoulder	Cut tube to correct length
		Observe min. straight length before tube bend
		Use hacksaw and guide not a plumbing – style tube cutter
		Carefully deburr tube end – no heavy chamfers
		Push tube firmly into cone
		Use EO-2 MOK for big sizes
	Severe working conditions	Make sure that operating conditions (pressure, corrosion, temperature, pressure peaks, flow rate…) do not exceed fitting performance
	Fitting undertightened	Tighten the nut until cap between retaining and sealing ring is closed
		Use correct spanners and spanner extensions especially for larger sizes and stainless steel fittings

Kovak.cz

EO-2 Problem	Probable cause	Suggested solution
Tube blow out	Fitting undertightened	Mark nut and body to indicate correct assembly
		Use recommended lubrication
		Pre-assemble joints away from installation to assure proper bite
	FM … steel is used	Use exclusively FM stainless steel with stainless steel on stainless steel tube, for combination of steel fitting/ stainless steel tube use FM…SSA nut
Short tube end fracture	Fatigue failure	Use swivel nut adapter (GZ…)

EO-2-FORM Problem	Probable cause	Suggested solution
Leak	Insufficiently tightened, shallow bite	Use correct spanners and spanner extensions especially for larger sizes and stainless steel fittings
	Damaged fitting	Check for damage
		Handle all components carefully
	Damage of fitting cone	Make sure tube is bottomed at assembly
	Contamination between sealing surfaces	Keep all components clean
	Hidden crack	Check for cracks, replace if necessary
	Mismatch of components	Select all components according to system application and product specification
		Use genuine Parker components
	Phantom leak from assembly lubricant	Carefully identify proper source of leak
		Don't over use lubricant
	Sealing ring (DOZ) missing	Use plugs for transport of preassembled tubes. Check assembly before final installation
	Incorrect tube forming	Check assembly before installation
		Use correct tool according to tube diameter, wall thickness and material
		Regularly check tools for wear and damage
		Replace damaged tooling
		Use specified lubricant LUBSS on forming process
	Misalignment	Stress free installation. Flanged tube end needs contact to stud ends before final tightening. Check length and bends of tubing to ensure this
Crack	Fatigue failure of tube under vibration	Stress free installation
		Proper use of clamps
		Bulkhead connection and hose to isolate joints from vibration
	Severe working conditions	Make sure that operating conditions (pressure, corrosion, temperature, pressure peaks…) do not exceed fitting performance

Kovaz.cz

O-Lok® Problem	Probable cause	Suggested solution
Leak	Damaged Trap-Seal	Hold sealing surfaces together until nut is firmly tightened
	Missing Trap-Seal	Use genuine Parker O-Lok® fittings with Trap-Seal groove (CORG)
	Extruded Trap-Seal	Ensure proper alignment
		Tightened to proper torque
		Use genuine Parker O-Lok® fittings with Trap-Seal groove (CORG)
	Pinched Trap-Seal due to air bleeding	Use bleed valves (PNLOBA/FNLBA) or test points EMA and hose for bleeding
	Phantom leak from assembly lubricant	Carefully identify proper source of leak
		Don't over use lubricant
	Untertightening	Use correct spanners and spanner extensions especially for larger sizes and stainless steel fittings. Use recommended torque or FFFT method
	Damaged fitting	Check for damage
		Handle all components carefully
	Poor surface quality of flange	Spiral marks can be avoided by proper deburring of tubes, particular the tube I.D.
		Clean tools, remove metal particles from pin
	Hidden crack	Check for cracks, replace if necessary
Tube fractured behind the nut	Fatigue failure of tube under vibration	Stress free installation
		Proper use of clamps
		Bulkhead connection and hose to isolate joints from vibration
	Severe working conditions	Make sure that operating conditions (pressure, corrosion, temperature, pressure peaks…) do not exceed fitting performance
Crack	Fatigue failure of tube under vibration	Stress free installation
		Proper use of clamps
		Bulkhead connection and hose to isolate joints from vibration
	Severe working conditions	Make sure that operating conditions (pressure, corrosion, temperature, pressure peaks…) do not exceed fitting performance

Triple-Lok® Problem	Probable cause	Suggested solution
Leak	Damaged fitting	Check for damage
		Handle all components carefully
	Contamination between sealing surfaces	Keep all components clean
	Hidden crack	Check for cracks, replace if necessary
	Mismatch of components	Select all components according to system application and product specification
		Use genuine Parker components
	Phantom leak from assembly lubricant	Carefully identify proper source of leak
		Don't over use lubricant

Kovex.cz

Triple-Lok® Problem	Probable cause	Suggested solution
Leak	Undertightening	Use correct spanners and spanner extensions especially for larger sizes and stainless steel fittings. Use recommended torque or FFFT method
	Scratches in Tube ID and flare area	Use Parflange process to improve surface quality
Tube fractured behind the nut	Fatigue failure of tube under vibration	Stress free installation
		Proper use of clamps
		Bulkhead connection and hose to isolate joints from vibration
Crack	Fatigue failure of tube under vibration	Stress free installation
		Proper use of clamps
		Bulkhead connection and hose to isolate joints from vibration
	Severe working conditions	Make sure that operating conditions (pressure, corrosion, temperature, pressure peaks…) do not exceed fitting performance

Weld nipples Problem	Probable cause	Suggested solution
Leak	Misalignment	Stress free installation
		Fix weld nipple to tube in application before finishing the welding
	Damaged O-ring	Inspect O-ring before final installation. Make sure that O-ring is not twisted at installation lubricate O-ring
	Missing O-ring	Assemble proper O-ring
	Extruded O-ring	Ensure proper alignment
	Pinched O-ring due to air bleeding	Use bleed valves (PNLOBA/FNLBA) or test points EMA and hose for bleeding
	Phantom leak from assembly lubricant	Carefully identify proper source of leak
		Don't over use lubricant
	Untertightening	Use correct spanners and spanner extensions especially for larger sizes and stainless steel fittings
	Damaged fitting	Check for damage
		Handle all components carefully
Tube fractured behind the nut	Fatigue failure of tube under vibration	Stress free installation
		Proper use of clamps
		Bulkhead connection and hose to isolate joints from vibration
	Severe working conditions	Make sure that operating conditions (pressure, corrosion, temperature, pressure peaks…) do not exceed fitting performance
Crack	Fatigue failure of tube under vibration	Stress free installation
		Proper use of clamps
		Bulkhead connection and hose to isolate joints from vibration
	Severe working conditions	Make sure that operating conditions (pressure, corrosion, temperature, pressure peaks…) do not exceed fitting performance

Flanges connection Problem	Probable cause	Suggested solution
Leak	Misalignment	Stress free installation
	Damaged O-ring	Inspect O-ring before final installation. Make sure that O-ring is not twisted at installation lubricate O-ring
	Missing O-ring	Assemble proper O-ring
	Extruded O-ring	Ensure proper alignment
		Tightened bolts to recommended torque
	Pinched O-ring due to air bleeding	Use bleed valves (PNLOBA/FNLBA) or test points EMA and hose for bleeding
	Phantom leak from assembly lubricant	Carefully identify proper source of leak
		Don't over use lubricant
	Undertightening	Use correct spanners and spanner extensions especially for larger sizes and stainless steel fittings
	Unequal tightening	For flanges with more than 2 screws: see assembly instruction in what order the screws need to be tightened
	Damaged fitting	Check for damage
		Handle all components carefully
Tube fractured behind the nut	Fatigue failure of tube under vibration	Stress free installation
		Proper use of clamps
		Bulkhead connection and hose to isolate joints from vibration
	Severe working conditions	Make sure that operating conditions (pressure, corrosion, temperature, pressure peaks…) do not exceed fitting performance
Crack	Fatigue failure of tube under vibration	Stress free installation
		Proper use of clamps
		Bulkhead connection and hose to isolate joints from vibration
	Severe working conditions	Make sure that operating conditions (pressure, corrosion, temperature, pressure peaks…) do not exceed fitting performance

Leaks from ports Problem	Probable cause	Suggested solution
Leak	O-ring sealing is missing/damaged	Replace with new O-ring
	Fitting not tightened properly, Undertightening	Retighten to appropriate specification
	Undertightened at initial assembly	Use correct spanners and spanner extensions especially for larger sizes and stainless steel fittings
		Use recommended lubrication
	Adjustable stud not assembled properly	Repeat with appropriate assembly torque
	O-ring pinched	Proper assembly procedure
	Fitting vibrates loose	Redesign system
		Clamping/Check the assembly torque
		Stressed joints
	Threads damaged	Replace fitting
	Use of tapered threads (NPT/BSPT/+++)	Use fittings with soft sealing O-ring/ED sealing

Leaks from ports Problem	Probable cause	Suggested solution
Leak	Port stud end **Form B**	Sealing edge Form B is damaged replace fitting
	Sealing surface is damaged	Rework sealing surface
Fitting vibrates loose	Undertightened at initial assembly	Tighten the nut according to correct torque
		Use correct spanners and spanner extensions especially for larger sizes and stainless steel fittings
	Torsion forces on assembly	Use clamps or bulkhead fittings to isolate twisting hose
		Avoid stress at initial assembly
Fractured stud	Severe overtightening	Do not exceed specified tightening instructions
	Fatigue failure of tube under vibration	Stress free installation
		Proper use of clamps
		Bulkhead connection and hose to isolate joints from vibration
	Severe working conditions	Make sure that operating conditions (pressure, corrosion, temperature, pressure peaks…) do not exceed fitting performance

Triple-Lok® 1025/50 Problem	Probable cause	Suggested solution
Tube slips in die during flanging or flaring	Tube undersized	Use tube within tolerance
	Die grip surface dirty	Clean with solvent
	Die grip surface worn	(do not use any wire brush) Replace Die
Flange/flare diameter to small	Tube slipped in die	See problem “Tube slips in die…”
	Incorrect pin	Use correct pin for tube size
	Die needs adjustment/incorrect die.	Contact Parker Rep./Use correct die
	Tube was not inserted to tube stop	Insert tube to tube stop
Flange/flare diameter too large	Tube forced against tube stop	Do not force tube against tube stop
	Die needs adjustment/incorrect die	Contact Parker Rep./Use correct die
	Incorrect pin and/or tube wall	Use correct pin for tube size
Flange/flare out of round	Tube not cut squarely	Cut tube squarely, within ± 1°
	Tube not supported properly	Support tube in line with dies
	Obstruction in die holder	Clean and remove debris
	Tube wall thickness varies	Use good quality tube
	Incorrect pin and/or tube wall	Use correct pin for tube size
Cracked flange/flare	Poor tube quality	Use recommended quality tube
	Too hard tube	Use recommended quality tube
	Heavy chatter during deburring	Eliminate chatter in deburring
Scored, pitted flange/ flare surface	Improper/lack of lubrication on pin	Use recommended lubricant
	Tube not properly deburred	Deburr and remove filings
	Tube not properly cleaned	Clean to remove filings
	Pin not cleaned	Keep pin clean but lubricated

O-Lok® 1025/50 Problem	Probable cause	Suggested solution
Flange/flare diameter too large	Tube forced against tube stop	Do not force tube against Tube stop
	Die needs adjustment/	Contact Parker
	Incorrect die	Use correct die
	Incorrect pin and/or tube wall	Use correct pin for tube size
	Sleeve not located properly in die	Locate sleeve in die cavity correctly
Flange/flare not round	Tube not cut squarely	Cut tube squarely, within ± 1°
	Tube not supported properly	Support tube in line with dies
	Obstruction in die holder	Clean and remove debris
	Tube wall thickness varies	Use good quality tube
	Incorrect pin and/or tube wall	Use correct pin for tube size
Cracked flange/flare	Poor tube quality	Use recommended quality tube
	Tube too hard	Use recommended quality tube
	Heavy chatter during deburring	Eliminate chatter in deburring
Scored, pitted flange/flare surface	Improper/lack of lubrication on pin	Use recommended lubricant
	Tube not properly deburred	Deburr tube and remove filings
	Tube not properly cleaned	Clean tube to remove filings
	Pin not cleaned	Keep pin clean and lubricated
Flange pin breaks during flanging	Incorrect pin and/or tube wall/ or wrong pin for tube material	Use correct pin for tube size/material

kovaz.cz

Assembly tooling

Index

Manual assembly tools for EO/EO-2	**VOMO** p. H5	**KONU** p. H6	**AKL** p. H7
Manual assembly devices	**HVM-B** p. H9	**EO-KARRYMAT** p. H11	
Assembly machines for EO/EO-2, Triple-Lok®	**EOMAT ECO** p. H13	**EOMAT UNI** p. H15	**EOMAT PRO** p. H21
Forming machines for EO2-FORM, EO-3®	**EO2-FORM F3** p. H24	**EO2-FORM PRO22** p. H24	**EOMAT PRO** p. H21
Flaring tools for Triple-Lok®	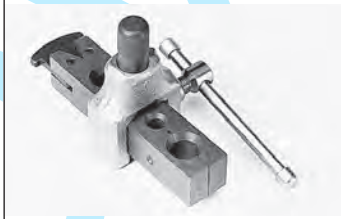 **1004/210A** p. H32	**Impact flarer** p. H33	**KARRYFLARE** p. H34
Parflange® Machines for O-Lok®/Triple-Lok®	**Parflare ECO** p. H35	**Parflange® 1025** p. H39	**Parflange® 50** p. H41	**Parflange® 50 PRO** p. H43

Index

Lubricants	**EO-NIROMONT** p. H49	**LUBSS** p. H49	
Cutting, bending and deburring tools	**AV 6/42** p. H50	**BAV 6/12** p. H51	**IN-EX 226** p. H51
Tube bending tools	**BV 6/18** p. H52	**BV 20/25** p. H53	
Hand-tools	**Par-Lok wrench** p. H54	**WZK – Tool box** p. H55	
O-Ring assembly tools for O-Lok®	**O-Lok® CORG** p. H56	**O-Ring Pick** p. H56	
Port manufacturing tools	**Counterbore** p. H57	**Thread taps** p. H57	
Thread identification	**Thread ID kit** p. H59	**Portboard** p. H59	**Sample case** p. H60

H

Parker tube fabricating equipment

Equipment described in this section is designed to make strong, accurate tubing systems easier and more dependable. Every time you make up a tubing circuit, you want to be sure you get strong dependable joints, accurate kink-free bends and a neat system that will stand up to years of hard service. You want to fabricate the system with the least effort and risk of errors.
Parker tube fabricating equipment is designed to help you get all these benefits. Parker has been leading the way in use of tubing and in fittings design for over 60 years. All this experience has shown Parker engineers a host of ways to make tube fabricating equipment more efficient and trouble free. You'll find them all in the equipment featured here – from improvements that help you make accurate concentric flares, to bender designs that make kink-free bending easier. They'll all help you get better tubing systems with less work and less risk of mistakes in fabrication.

Machine selection

Parker offers a variety of assembly devices and machines for different products and different applications.
Refer to overview in chapter E for machine recommendation.

Disposal of old equipment

The HPCE electrically driven assembly machines are large stationary industrial tools within the meaning of the Electrical and Electronic Equipment Act (EC Directive 2002/96/EC/"WEEE Directive"). This equipment is not usually used in private households but in industry. Within the scope of the Electrical Act, industrial users are responsible for the professional disposal of old equipment.

Service

Assembly machines and standard tooling for HPCE connectors are available from stock for immediate service.
Both purchasing and leasing are possible depending on machine type and volume of business. For limited projects, assembly equipment can be provided on a rental basis via our certified distributor network.
Special "demo"-equipment is available for sales presentations and fairs.

Technical support

HPCE machine service procedures ensure that reliable machine function and fitting performance is achieved when using genuine Parker assembly equipment.
All machines come with detailed operating manuals. Parker distributors and sales representatives are trained to give advice on operation and application. Experienced application engineers at HPCE are available when it comes to special application of HPCE assembly equipment.
In case of machine malfunction, spare machines can be provided on short notice so that production can continue. In the meantime, damaged machinery is checked and repaired at the HPCE machine repair facility. Well trained and experienced engineers take personal care that the machines return properly repaired and tested.
HPCE also offers a machine maintenance and calibration service. Standard spare parts like oil filters can be ordered from stock.

Repair procedure

Please contact your Parker Service Center for problem solving/repair. Your correspondent will organise the repair and arrange a spare machine if required. Please do not send in machines without notice to your sales correspondent. To assure optimum service, all machine shipments must include a documentation with information about: Machine type, serial number, purchase data, problem description, contact name, phone number and complete address for return.

Experienced engineers support proper operation of HPCE assembly machinery

Tool lifetime

Assembly tools are subject of wear and must be regularely (max. 50 assemblies) cleaned and checked (Checking instructions see chapter E). Worn out tools can cause dangerous assembly failures and must be replaced in time. Maximum lifetime can be achieved by following factors:

- Regular cleaning and checking
- Clean and corrosion-protected storage
- Proper de-burring and cleaning of tube end
- Proper tool selection and operation
- Use of specified lubricant

Manual assembly tools for EO/EO-2

VOMO – Pre-assembly tools for EO/EO-2 tube connections

Simple but essential tool for the manual presetting of EO-fittings.

The use of a VOMO assures that the bite ring securely cuts into the tube without damage on the inner fitting cone.

Pre-assembly using VOMO or EOMAT must be done for all connections of:

- EO-2 with large tube dimensions (Tube O.D. 30 mm and above)
- EO-Progressive Stop Ring/Progressive Ring with stainless steel tube or standpipe fittings (E.g.: "BE"-type hose fitting).

For proper use, see EO assembly instructions. VOMO tools wear out and then may cause assembly failures. VOMO's must be checked regularly with "KONU" cone-templates (max. after 50 assemblies) and replaced when damaged or worn out.

Specifications:

Material: hardened tool steel
Sizes: 4 LL – 12 LL,
6 L – 42 L,
6 S – 38 S

Pre-assembly of: EO-2 and Progressive Stop Ring PSR/EO progressive Ring DPR
Economic production qty: Max. 10 assemblies per day.

Features, advantages and benefits of pre-assembly tools:

1. **Marking notch** – A special ridge engraves a circular mark onto the tube end to verify that it was properly bottomed at assembly. Failures caused by improper tube cutting or bottoming in VOMO can be recognised before final installation.
2. **Flexible** – A VOMO can be used anywhere to assure safe fitting assembly – even at assembly sites where EOMAT machines are not available.
3. **Safe** – Hazardous blowout of incorrect assembled standpipe hose fittings or stainless steel tube can be avoided by VOMO-assembly.

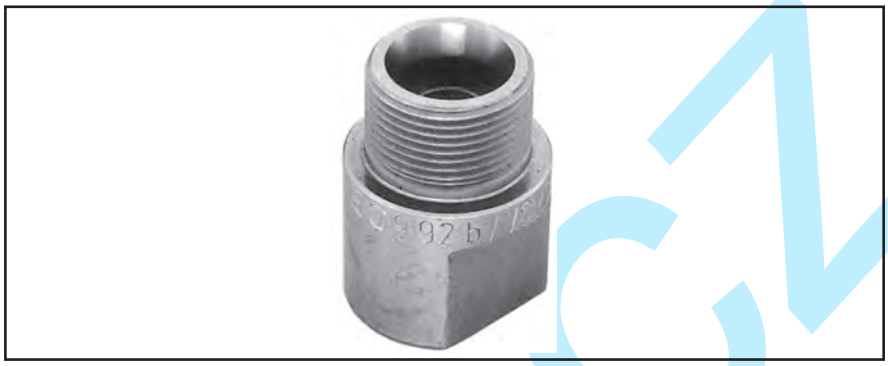

4. **Efficient** – There is no doubt that VOMO-presetting contributes to save time and effort in bite-type assembly. The small investment pays back immediately.
5. **Special** – VOMO tools are specifically designed and manufactured to match EO-fitting standards.
6. **Tool lifetime** – Assembly tools are subject of wear and must be regularely (max. 50 assemblies) cleaned and checked (Checking instructions see chapter E). Worn out tools can cause dangerous assembly failures and must be replaced in time. Maximum lifetime can be achieved by following factors:
   - Regular cleaning and checking
   - Clean and corrosion-protected storage
   - Proper de-burring and cleaning of tube end
   - Proper tool selection and operation
   - Use of specified lubricant

Series	Tube O.D. mm	Pre-assembly tools Order code	Cone-templates Order code
LL	04	VOMO04LLX	KONU04LL
	06	VOMO06LLX	KONU06LL
	08	VOMO08LLX	KONU08LL
	10	VOMO10LLX	KONU10LL
	12	VOMO12LLX	KONU12LL
L	06	VOMO06LX	KONU06L[1)]
	08	VOMO08LX	KONU08L[1)]
	10	VOMO10LX	KONU10L[1)]
	12	VOMO12LX	KONU12L[1)]
	15	VOMO15LX	KONU15L
	18	VOMO18LX	KONU18L
	22	VOMO22LX	KONU22L
	28	VOMO28LX	KONU28L
	35	VOMO35LX	KONU35L
	42	VOMO42LX	KONU42L
S	06	VOMO06SX	KONU06L[1)]
	08	VOMO08SX	KONU08L[1)]
	10	VOMO10SX	KONU10L[1)]
	12	VOMO12SX	KONU12L[1)]
	14	VOMO14SX	KONU14S
	16	VOMO16SX	KONU16S
	20	VOMO20SX	KONU20S
	25	VOMO25SX	KONU25S
	30	VOMO30SX	KONU30S
	38	VOMO38SX	KONU38S

1) Cone-templates for tube O.D.6 to 12 mm are identical in series L and S.

KONU – Cone-template for tools VOMO/MOK/MOSI

Cone-templates are essential for monitoring wear on pre-assembly tools like VOMO, MOK or MOS.

KONU must be regularly used to prevent fitting failures caused by worn out or damaged tools (DIN 3859-2: max. each 50th assembly).

For proper use see EO assembly instructions, Chapter E.

Specifications:

Material: hardened tool steel
Sizes: 4 LL – 12 LL,
6 L – 42 L,
6 S – 38 S
(Sizes 6 L – 12 L
are identical to 6 S – 12 S)

Features, advantages and benefits of cone-templates:

1. **Special** – KONU are high precision cone-templates specifically designed and manufactured to match EO standards.
2. **Maintenance tool** – A leaking fitting can be easily checked and replaced if worn-out.

Tube O.D. mm	Cone gauges Order code
04-LL	KONU04LL
06-LL	KONU06LL
08-LL	KONU08LL
10-LL	KONU10LL
12-LL	KONU12LL
06-L	KONU06L[1])
08-L	KONU08L[1])
10-L	KONU10L[1])
12-L	KONU12L[1])
15-L	KONU15L
18-L	KONU18L
22-L	KONU22L
28-L	KONU28L
35-L	KONU35L
42-L	KONU42L
06-S	KONU06L[1])
08-S	KONU08L[1])
10-S	KONU10L[1])
12-S	KONU12L[1])
14-S	KONU14S
16-S	KONU16S
20-S	KONU20S
25-S	KONU25S
30-S	KONU30S
38-S	KONU38S

[1]) Cone-templates for tube o.d. 6 to 12 are identical in series L and S.

Selection guide: Checking equipment for EO assembly

Performance of EO tube connections is depending on perfect condition of pre-assembly tools and proper assembly process.
Cone-templates KONU for monitoring MOK/VOMO tool wear and AKL gauges for checking result of PSR preassembly are available.

	KONU	AKL
Function	Checking of preassembly tools	Checking of PSR assemblies
Will detect: Deformed **MOK/VOMO**	Yes, compared to template	Yes, if relevant for PSR performance
Will detect: Visual damage and cracks of **MOK/VOMO**	No	Yes, if relevant for PSR performance
Will detect: Assembly failures like: tube end not bottomed, underassembly of PSR	No	Yes, if relevant for PSR performance
Will detect: Insufficient bite of **PSR**	No Visual check required	No Visual check required
Application	Expert template for trained and experienced engineers in workshop	Gauge for production of PSR assemblies

KONU – Cone-template for EO pre-assembly tools

Limitations
Cone-template KONU detect wear and deformation of pre-assembly tools like VOMO, MOK or MOS. But it does not indicate failures on completed assemblies.
Cone-template KONU will not detect all possible failures of pre-assembly tools. Pre-assembly tools must be scrapped when they show visual wear or cracks, even if KONU check is OK.

Application
KONU is expert tooling for trained and experienced engineers. For practical monitoring of assembly result in production, distance gauge AKL are recommended.

Distance Gauge for Assembly AKL

Distance Gauges AKL

Distance gauges AKL are suitable for checking the pre-assembly result of Progressive Rings PSR. They are used on pre-assembled tubes before final installation. The green LED lights up, when none of the following failures is detected:

- Excessive wear of preassembly tools MOK
- Excessive assembly force / pressure setting
- Tube end by far not bottomed in assembly tool MOK.

Therefore, assembly check by cone-template KONU can be void. Use of distance gauges AKL does not replace the check of the bite (visible collar in front of Progressive Ring).

Specification

Function:	Distance gauge with LED indication
For checking of:	Machine pre-assembly of Parker EO Progressive Ring PSR
Series:	LL/L/S
Tube-OD:	4–38/42 mm
Dimensions:	Length: approx. 130–160 mm Front diameter: approx. 30–52 mm
Power:	2 × Battery AA – Mignon – LR6 (included)
Scope of supply:	Distance gauge with LED indication, batteries, master piece and instructions in a plastic case

Features, Advantages & Benefits of distance gauge AKL

1. Clear – In contrast to the visual evaluation, the simple good/bad decision is obvious, even for less experienced operators.
2. Economical – The distance gauges AKL are fast in application. The production process is not slowed down noticeably compared with other testing methods.
3. Result-oriented – In the comparison to examining the tools with the AKL teachings the assembly result is examined. Thus also the failure opportunity “Tube by far not bottomed” is detected.
4. Practical – The gauges are light, handy, easy, and can be fastened with an eye. Standard batteries are used, so that a long life span is reached.
5. Safe – The measuring head consists of high-grade steel and is not adjustable or detachable. A master piece for regular functional testing is shipped with each AKL gauge.
6. Innovative – For customers of prefabricated hydraulic tubes, so far it was not easy to inspect the assembly quality of incoming goods.Thus incorrect assemblies, which are caused by use of worn pre-assembly tools, remained often undiscovered. With the distance gauges AKL an efficient and effective inspection of incoming goods can be accomplished, allowing pro-active quality management together with the tube supplier.

Limitations

- Distance gauges AKL are suitable only for the inspection of machine pre-assembly. After final tightening of the connection, a failure might be indicated, even if the Progressive Ring was properly assembled by the pre-assembly machine.
- Distance gauges AKL are designed for the use with Progressive Rings PSR. Parker does not take responsibility for the function with other bite type fittings. Distance gauges AKL are not suitable for checking EO-2 and EO2-FORM connections.
- Use of distance gauges AKL does not replace the check of the bite (visible collar in front of Progressive Ring).

Function

Distance gauges AKL are suitable for checking the effect of worn tools on pre-assembly result of Progressive Rings PSR. They are used on pre-assembled tubes before final installation. The distance gauges AKL particularly detects the position of the Progressive Ring PSR in relation to the tube end. Shining of the green LED indicates that the assembly cone can be further used. Flicker of the green LED is quite possible, since the installed tube in the gauge can have some clearance. If the wear of the assembly tool reaches 0,1 mm on the cone, the LED shines no longer and indicates that the tool is worn. These defective tube assemblies must not be installed and the worn assembly tool must be replaced. The inspection has to take place regularly, at the latest after 50 assemblies. Then, assembly tool check by cone-template KONU can be void.

Operation

- Shining of the green LED indicates that the assembly cone can be further used
- If the LED doesn‘t shine, the assembly must not be used

Applications

- Mass production of hydraulic tube assemblies for mobile hydraulics, automotive and agricultural vehicles
- Commercial tube manipulators for hydraulic tube assemblies
- Inspection of incoming tube assemblies at the final installation plant

Ordering

Size	Order code	Size	Order code	Size	Order code
04-LL	AKL04LL	10-L	AKL10L	10-S	AKL10S
06-LL	AKL06LL	12-L	AKL12L	12-S	AKL12S
08-LL	AKL08LL	15-L	AKL15L	14-S	AKL14S
10-LL	AKL10LL	18-L	AKL18L	16-S	AKL16S
12-LL	AKL12LL	22-L	AKL22L	20-S	AKL20S
06-L/S	AKL06LS	28-L	AKL28L	25-S	AKL25S
08-L/S	AKL08LS	35-L	AKL35L	30-S	AKL30S
		42-L	AKL42L	38-S	AKL38S

Manual assembly devices for EO/EO-2 tube connections

Machine selection guide

Manual assembly devices are available to reduce assembly time and effort. High assembly quality and consistency assures reliable fitting performance. EO assembly devices are manually operated and do not need any external power supply.

Due to the low weight, easy handling and simple but reliable design, the EO assembly devices are the ideal tool for tube preparation of small quantities.

For efficient mass production, manual devices are not suitable, therefore EOMAT machines are recommended.

Features, advantages and benefits

1. **Flexible** – Manual assembly devices are portable and do not need any power supply. Therefore they are ideal for on-site tube assembly, repair and plant maintenance.
2. **Economic** – Manual assembly devices close the gap in between manual fitting pre-assembly in a vice and the EOMAT technology. The devices contribute to save time and effort in bite type assembly. The little investment pays back immediately.
3. **Controlled assembly** – After pre-assembly, the tube joint can be easily inspected before final installation. Therefore, this mandatory step in fitting assembly is less likely to be forgotten.
4. **Special** – Each device has been especially developed for the efficient use in a certain application. The HVM-B is a handy tool for the quick pre-assembly of EO Progressive rings onto soft steel tube. The EO-KARRYMAT is a real problem solver when it comes to on-site assembly of medium to large EO-Progressive rings and EO-2 fittings onto steel and stainless steel tube.

How to select the ideal assembly device for your application:

	HVM-B	EO-KARRYMAT
Assembly method EO-2: PSR/DPR/D: Triple-Lok®:	 not suitable Stroke controlled not suitable	 Pressure controlled Pressure controlled not suitable
Tube specification Material: Outside diameter/mm: Min. U-bend: Wall thickness:	 Steel 4–15 mm 25 mm no limitation	 Steel, Stainless Steel 6–42 mm 66 mm no limitation
Tool specification	Special assembly cones MOSI and plates HL	Standard assembly cones MOK and plates GHP
Operation drive	Lever with eccentric cam	Handpump
Process control	Assembly stroke determined by tool geometry	Pressure control according to selection chart
Preassembly is equal to EO-2: PSR: D/DPR:	 – 1 turn 1 turn	 Gap closed 1½ turn 1¼ turn
Performance Overall cycle time: Economic production quantity:	 10 secs. max. 20 assemblies per day	 30–60 secs. max. 50 assemblies per day
Application	Simple tool for quick pre-assembly of small dimension EO-Progressive rings onto steel tubes	Most efficient for one-site assembly of medium to large DPR- and EO-2 connections onto any suitable tube material. Repair jobs and hydraulic services

HVM-B Pre-assembly tool

This pre-installation tool is a simple tool for a quick and safe pre-assembly of EO-Progressive Stop Ring/Progressive ring. The tool is very handy and can be used at any site provided a vice is available. Suitable for LL, L and S series and tube sizes from 4 to 15 mm O.D.

Attention:

⚠ **Not suitable for EO-2 assembly.**
⚠ **Not suitable for stainless steel progressive ring assembly.**
⚠ **Final assembly of ½ turn in fitting body required.**
⚠ **Not suitable for tube OD larger 15 mm**

Specifications:

For pre-assembly of: EO Progressive Stop Ring (PSR)/Progressive Ring (DPR)
Pre-assembly equals: 1 turn of nut

For assembly check and fitting installation see assembly instructions chapter E.

Tube O.D.: 4 to 15 mm
Min. U-bend: 25 mm
Series: LL, L and S
Tube and fitting material: Steel
Weight: approx. 7.0 kg (without tools)
Economic production quantity: max. 20 ass./day

Features, advantages and benefits of pre-assembly tool:

1. **Special** – HVM-B is designed and manufactured to match EO-DPR standards.
2. **Vice mounted** – For easy workshop use, the HVM-B can be clamped into any vice.
3. **Flexible** – A HVM-B can be used anywhere to assure safe fitting assembly – even at assembly sites where EOMAT technology is not available.
4. **Efficient** – There is no doubt that HVM-B-presetting contributes to save time and effort in bite-type assembly. The small investment pays back immediately.

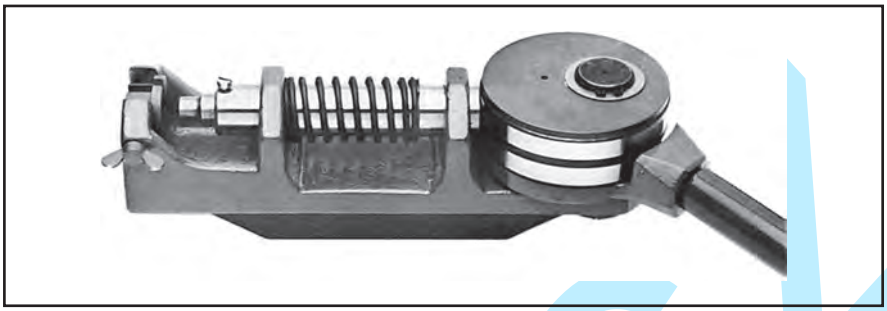

Type	Order code
HVM-B pre-assembly tool device for mount in vice, without tools	HVMBKPLX

Series	Tube O.D. mm	Tube location plate Order code	Assembly cone Order code	Cone-template Order code
LL	4	HL04X	MOSI04LLX	KONU04LL
	6	HL06X	MOSI06LLX	KONU06LL
	8	HL08X	MOSI08LLX	KONU08LL
	10	HL10X	MOSI10LLX	KONU10LL
	12	HL12X	MOSI12LLX	KONU12LL
L	6	HL06X	MOSI06LX	KONU06L[1])
	8	HL08X	MOSI08LX	KONU08L[1])
	10	HL10X	MOSI10LX	KONU10L[1])
	12	HL12X	MOSI12LX	KONU12L[1])
	15	HL15X	MOSI15LX	KONU15L
S	6	HL06X	MOSI06SX	KONU06L[1])
	8	HL08X	MOSI08SX	KONU08L[1])
	10	HL10X	MOSI10SX	KONU10L[1])
	12	HL12X	MOSI12SX	KONU12L[1])
	14	HL14X	MOSI14SX	KONU14S

1) Cone-templates for tube o.d. 6 to 12 are identical in series L and S.

HVM-B Pre-assembly tool

1

How to use

- Clamp HVM-B into vice.
- Select required assembly cone (MOSI) and insert.
- The assembly cones are marked with tube O.D. and series (e.g. 10-L).

2

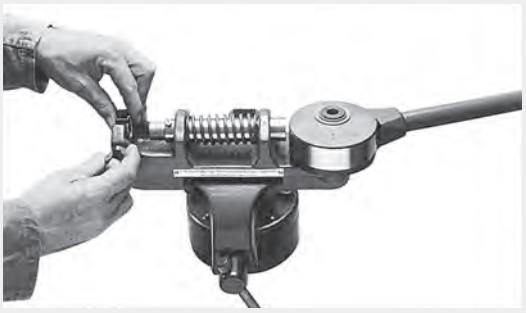

- Insert the tube location plate – HL – of corresponding size and fasten with screw.
- The tube location plates are marked with tube O.D. (e.g. “10”).

3

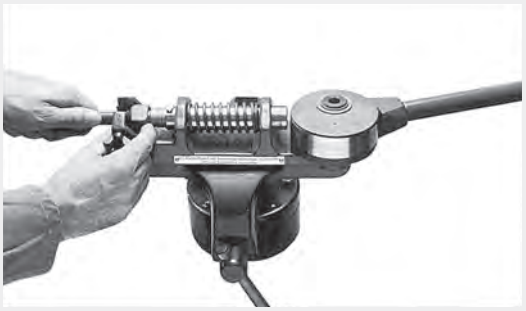

- Slip nut “M” and Progressive Stop Ring PSR/Progressive ring “DPR” (or cutting ring “D”) over tube end and insert into pre-assembly tool.
- Nut position must be in front of tube location plate – HL – !

4

- Hold tube against stop in the assembly cone.

5

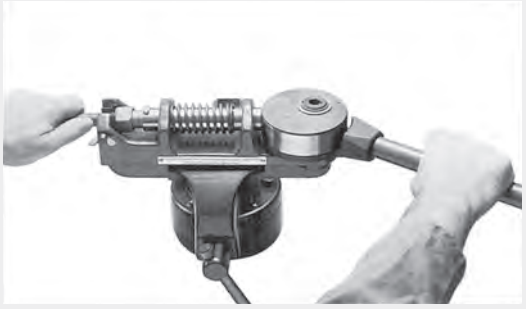

- Pull lever to turn the eccentric cam (Pre-assembly).

Attention

⚠ **For assembly check and final assembly see PSR/DPR instructions.**

Attention:

⚠ **At final assembly nut must be tightened by ½ turn.**

EO-KARRYMAT portable pre-assembly device for EO tube connections

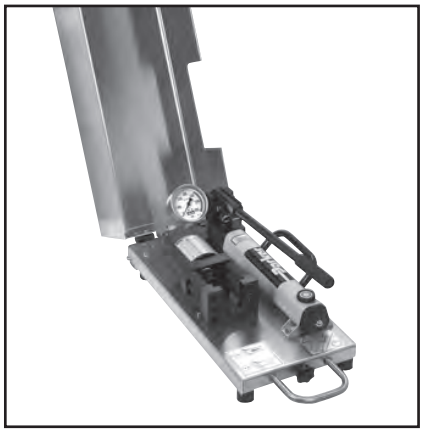

Type	Order code
EO-KARRYMAT assembly device complete device including handpump and carrying case, including operation manual. Tools (assembly cone MOK and backing plate GHP) must be ordered separately.	EOKARRYMAT
Promotion leaflet UK/DE	4044-DE/UK
Spare parts	
Handpump	82C-2HP
Pressure gauge	EOKARRYMAT/MANO
Pressure chart sticker	EOKARRYMAT/CHART
Cover hinge	EOKARRYMAT/HINGE
Assembly head	EOKARRYMAT/BLOCK

The EO-KARRYMAT is a dependable device for safe and efficient bite-type presetting. It allows pre-assembly of even large dimension steel and stainless steel tube at assembly sites where EOMAT technology is not available.

The EO-KARRYMAT consists of a hydraulic drive and a handpump. The hydraulic assembly pressure can be read on a gauge. The EO-KARRYMAT comes as one unit with all components firmly attached to a practical carrying frame.

Specifications:

For pre-assembly of: EO PSR/DPR and EO-2

Pre-assembly equals:
EO Progressive Stop Ring (PSR): 1½ turns of nut

EO Progressive ring (DPR): 1¼ turns of nut

EO-2 "Gap closed"

⚠ **For assembly check and fitting installation see assembly instructions chapter E.**

Tube O.D.: 6 to 42 mm

Min. U-bend: 66 mm

Series: L and S

Tube and fitting material: Steel and stainless steel

Total cycle time: approx 30–60 sec.

Weight: approx. 28 kg

Economic production quantity: max. 20 assemblies per day

Oil: HLP23–1.22 (filled before delivery)

Features, advantages and benefits of EO-KARRYMAT:

1. **Ideal** – Weighing 28 kg, the EO-KARRYMAT is portable and does not need any power supply. Therefore the EO-KARRYMAT is the ideal tool for on-site tube assembly, repair and plant maintenance.
2. **Economic** – The EO-KARRYMAT closes the gap in between manual fitting pre-assembly in a vice and the EOMAT technology. EO-KARRYMAT assembly is far less hard work as manual assembly but it achieves the dependent assembly result of the EOMAT assembly machine.
3. **"Must" for stainless steel** – As direct assembly of stainless steel tubes in bite type fittings results in failure, a special pre-assembly process is mandatory according to ISO 8483 / DIN 3859 and all manufacturers instructions. The EO-KARRYMAT fulfils this requirement.
4. **Dependable** – The use of the EO-KARRYMAT is far less demanding than manual fitting assembly using wrenches. It helps to prevent failures caused by insufficiant fitting assembly which is most critical on large dimension steel and stainless steel tube.
5. **Controlled assembly** – After pre-assembly, the tube joint can be easily inspected before final assembly. Therefore, this mandatory step in fitting assembly is less likely to be forgotten.
6. **Special** – The EO-KARRYMAT has been especially developed for the efficient on-site assembly of EO Progressive ring and EO-2 fittings. The tools are designed to allow safe assembly of even large dimension steel and stainless steel tubes without excessive hard work.

The applications:

- Repair workshops
- Mobile repair service
- Plant maintenance in process engineering, paper production, power plants, offshore exploration, industrial production
- On-site assembly of tubing systems

Tube O.D.	EO-2	PSR/DPR
Ø [mm]	P [bar]	P [bar]
6	45	30
8	55	40
10	65	50
12	75	60
14	95	70
15	95	70
16	110	90
18	110	90
20	160	120
22	120	110
25	210	160
28	160	140
30	300	200
35	250	180
38	350	280
42	300	230
Installation	min. 60° max. 90°	~ 30°

Assembly machines for EO/EO-2 and Triple-Lok®

Machine selection guide

EOMAT assembly is much more cost efficient than manual assembly of EO-fittings. Assembly time and effort are greatly reduced. Proper and consistant pre-assembly support safe and leakfree fitting performance.

EOMAT machines are specifically designed to match EO-2, EO PSR/DPR rings and Triple Lok® standards. Assembly is achieved with high precision and repeatability.

EOMAT machines are available in several versions to serve individual applications. All machines are designed for reliable workshop use even under severe construction site working conditions. Tool handling and machine operation are simple.

How to select the ideal EOMAT machine for your application:

Features, advantage and benefits:

1. **Universal** – Assembly of EO-2, EO PSR/DPR rings and 37° flaring for Triple-Lok® can be done with just 1 machine.
2. **Efficient** – With a cycle time of some 12 to 15 seconds the EOMAT machine greatly saves assembly time and effort. The investment pays back quickly.
3. **Safe** – Proper pre-assembly greatly reduces the danger of leaking fittings or even hazardous tube blow out.
4. **Strong** – Even 37° flaring of larger sized stainless steel tube is done within few seconds.
5. **Flexible** – All tube dimensions from 6 to 42 mm can be used. All common tube materials are covered, even plastic tube (EO-2 and PSR/DPR only).
6. **Marking notch** – A special ridge makes a circular mark onto the tube end to verify that it was properly bottomed at assembly. Failures caused by improper tube cutting or bottoming in MOK can be recognised before final installation.
7. **Reliable** – For more than 20 years, hundreds of EOMAT machines have operated under heavy duty workshop conditions.

Selection chart EOMAT Pre assembly and Flaring machines

	EOMAT ECO	EOMAT UNI	EOMAT PRO
		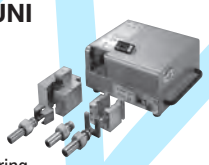	
Assembly method:			
EO-2	Pressure controlled	Pressure controlled	Pressure controlled
D/PSR/DPR	Pressure controlled	Pressure controlled	Stroke controlled
Triple-Lok®	–	Conventional 37° flaring	–
Tube specification:			
Material	Steel, Stainless Steel	Steel, Stainless Steel	Steel, Stainless Steel, copper, nylon
Outside diameter	6–42 mm	6–42 mm	PR022 / PR042: 4–22/4–42 mm
Min. U-bend	75 mm	65 mm	PR022 / PR042: approx. 35/70 mm
Wall thickness:	No limitation	No limitation	No limitation
EO-2/PSR/DPR	not applicable	6×1 to 38×4 or 42×3 mm	–
Triple Lok®		(Tube O.D. × wall thickness)	
Operation:			
Setting	Manual pressure adjustment according to selection chart Depending on: Assembly type; Tube dimension; Tube material	Manual pressure adjustment according to selection chart Depending on: Assembly type; Tube dimension; Tube material	Tool detection and automatic adjustment Manual adjustment of pressure is possible
Process control	Pressure gauge	Pressure gauge	PLC with display
Error detection:	No	No	Warning light and message displayed if deviations in assembly process occur
Memory function	No	No	Memory options for custom application on MOK transponderchip
Oil temperature control	No	No	Warning light and message displayed
Foot operating switch	Not available	Not available	Available
Performance	1 Phase/230 V	1 Phase/230 V	400 V, 50 Hz, 3-phase
Overall cycle time (sec.):			
EO-2 presetting	20	12	PR022 / PR042: approx. 8/10 seconds
PSR/DPR presetting	25	15	PR022 / PR042: approx. 10/12 seconds
37° flaring	–	15	–
Economic production quantity:	max. 50 assemblies per day	max. 300 assemblies per day	100 or more assemblies per day
Continuous operating:	50 %	80 %	100%
Weight	approx. 30 kg	approx. 66 kg	approx. 90 kg
Application	**Portable machine for repair and workshops**	**Universal assembly machine for workshop**	**Cost-effective commercial production**

EOMAT ECO Mobile assembly machine for EO-2 and PSR hydraulic fittings

The EOMAT ECO is a portable machine for the assembly of EO-2 and EO Progressive Ring fittings.
This electro-hydraulic unit is simple to operate; the assembly pressure is set on the digital display. The equipment is simple to use, robust and easy to move.
The EOMAT ECO is an ideal piece of equipment for hydraulic service engineers.

Technical data

Application:	assembly of Parker EO-2 and PSR Progressive Ring fittings assembly of cutting ring fittings to DIN EN ISO 8434-1
Process:	pressure-controlled press operation through assembly tools
Drive:	electro-hydraulic
Assembly corresponds to:	EO-2: gap closed PSR: 11/2 turns of the nut
Tube material:	steel and stainless steel Tube diameters: 6 to 42 mm
Series:	L and S
Min. U-bend:	75 mm
Speed:	working stroke 15 to 20 secs, total cycle time approx. 20 to 25 secs
Dimensions:	L 750 × W 360 × H 300 mm
Weight:	30 kg
Electrical power rating:	230V 1-phase 50 Hz 700 W

Operation:

for detailed assembly instructions, see our fittings technology technical handbook, chapter E. For safety information, see machine operating manual.

1. Install assembly cone and backing plate
2. Set the setting pressure on the display in accordance with the chart
3. Insert tube complete with nut and ring
4. Operate START button and keep pressed
5. Hold the tube firmly during the assembly operation and press against the stop
6. The assembly operation is complete when the cylinder has travelled back to its starting position
7. Assembly inspection and final assembly should proceed in accordance with the operating manual.

Performance:

Economic production quantity: max. 100 assemblies per day.

Type	Order code
EOMAT ECO basic machine Ready to operate, including operating manual Without tools, no separate assembly fixture required	EOMATECO230V
Bulletin	4046 via Parker catalogue service EMDC
Operating manual UK/DE/FR/IT/ES	EOMATECO/MANUAL
Pressure chart sticker	EOMATECO/CHART
Standard preventive maintenance	EOMATECO/INSPECTION

Setting pressures

EOMAT ECO

Tube-O.D.	EO-2	PSR/DPR
	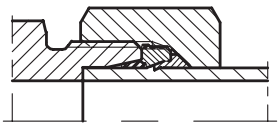	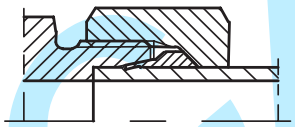
Ø (mm)	P (bar)	P (bar)
6	25	20
8	35	25
10	40	35
12	45	40
14	60	45
15	60	45
16	70	60
18	70	60
20	105	75
22	75	70
25	135	105
28	105	90
30	190	130
35	160	115
38	210	180
42	190	145
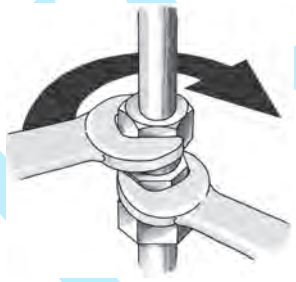	Installation 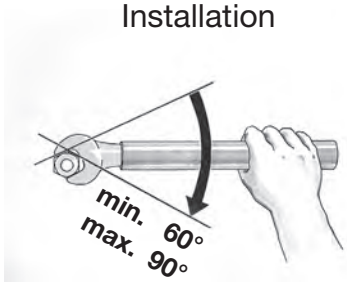	Installation 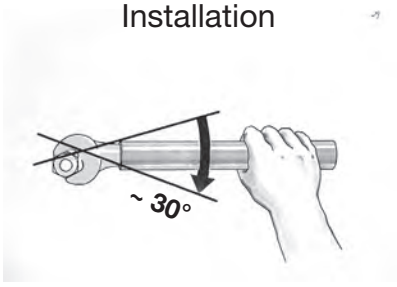

The stated values are guidelines. The results of pre-assembly should therefore be thoroughly checked.

lovaz.cz

EOMAT UNI assembly and flaring machine

General

The EOMAT UNI is an electro-hydraulic machine for the assembly of:

EO-2
EO PSR/DPR and
Triple-Lok® 37° flared tube fittings.

Compared to manual assembly it greatly reduces assembly time, effort and cost and also guarantees leakfree performance of constant high-quality fitting assemblies.

Common tube materials such as steel (ST 37.4 NBK, ST 52.4 NBK), stainless steel (1.4571/1.4541/316Ti or similar) and copper can be pre-assembled.

The tool range covers all metric tube sizes from 4 to 42 mm outer diameter. The required operating pressure is variable and set at the LED-Display. The unit may therefore be used for a variety of different applications. The tooling for either EO-2/ PSR/DPR pre-assembly or tube flaring may be manually replaced, without the use of tools.

Technical data

Tube diameters: 6–42 mm

Min. U-bend: 65 mm

Series: L and S

Oil:
Esso Nuto H 32 or equal, 3.5L
(Reference oil change, see label on unit)
Operating pressure:
Variable from 15 to 200 bar
Dimensions:
L 515 mm, W 535 mm, H 285 mm

Performance:

Overall cycletime: 12–15 sec.
Economic production quantity:
max. 300 assemblies per day

Hydraulic pump:
1.2 kW – 3.7 l/min
Electrical connection:
220–240 V/ 1~ / 50 Hz / 9.5 A
Connection cable:
5 m – Earth plug
Weight: 66 kg

We reserve the right to make modifications in the course of further technical development.

Features, advantages and benefits:

1. **Universal** – Assembly of EO-2, EO-PSR/DPR and 37° flaring for Triple-Lok® can be done with just 1 machine.
2. **Efficient** – With a cycle time of some 15 seconds the EOMAT UNI greatly saves assembly time and effort. The investment pays back quickly.
3. **Safe** – Proper pre-assembly greatly reduces the danger of leaking fittings or even hazardous tube blow out.
4. **Strong** – Even 37° flaring of larger sized stainless steel tube is done within few seconds.
5. **Flexible** – All tube dimensions from 4 to 42 mm can be pre-assembled. All common tube materials are covered.
6. **Workshop tool** – At 66 kg, the EOMAT UNI can be brought to an assembly site.
7. **Marking ridge** – All MOK tools feature a special ridge in the bottom surface which is designed to make a circular groove into the tube-end at assembly. No mark indicates that the tube-end has not been properly bottomed at assembly.
8. **Reliable** – For more than 20 years, hundreds of machines are operated under heavy duty workshop conditions.

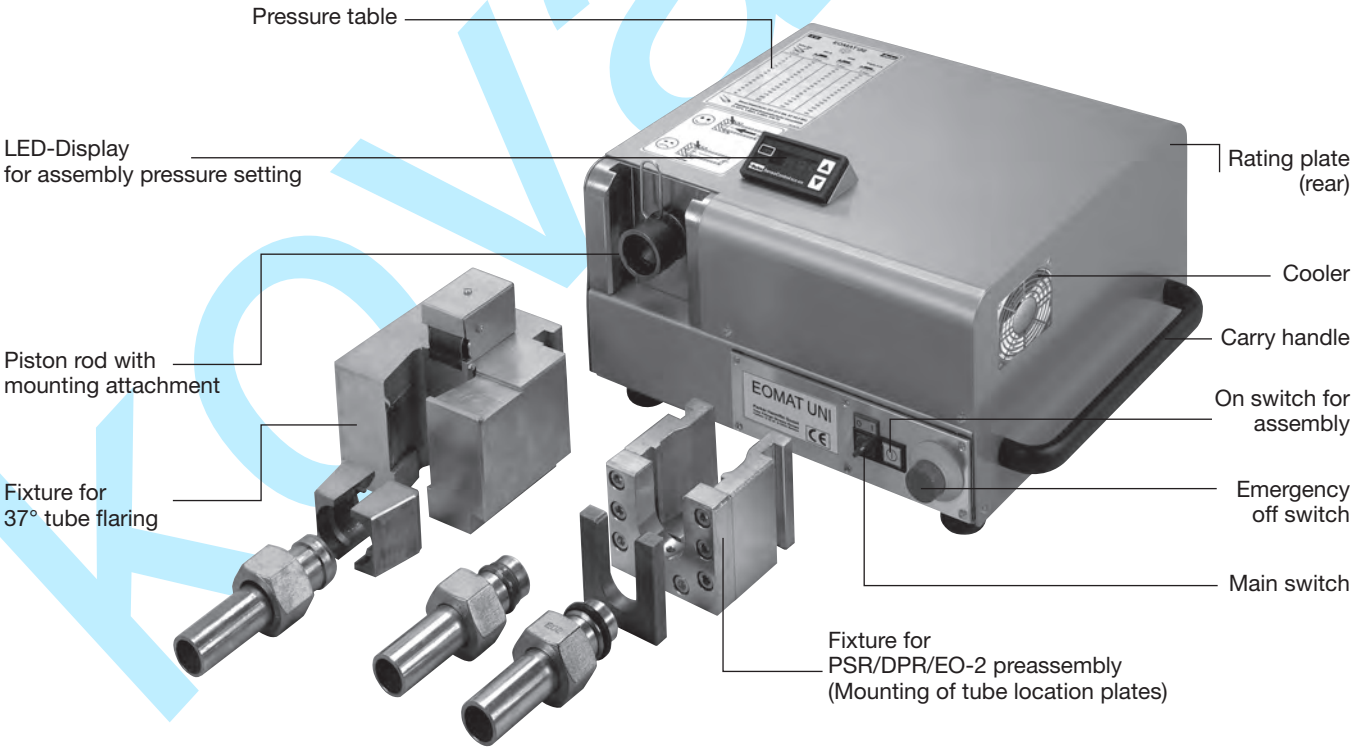

EOMAT UNI assembly and flaring machine

Basic operation for EO-2 Functional nuts

See EO-2 instructions for fitting assembly

1. Adjust EO-2 pressure according to chart (A)
2. Insert the pre-assembly fixture in the tool mounting (weight approx. 5.5 kg).
3. Select the assembly cone (MOK) and backing plate (GHP) in accordance with the tube size and type.
4. Place and lock the assembly cone in the tool holder. Place the backing plate in the slot in the fixture.

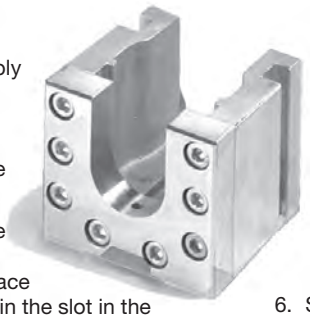

5. Slide the EO-2 functional nut onto the tube, which has been cut off square and deburred.
6. Place the tube with the EO-2 functional nut in the pre-assembly fixture between backing plate and assembly cone.
7. Press the tube against the stop in the assembly cone. Hold the tube in this position. Press and hold the start button until the pre-assembly process is complete.
8. Take the assembled tube connection out of the location plate. See EO-2 assembly instruction (chapter E) for assembly check and installation instructions.
9. Check assembly result before final installation.

Basic operation for EO PSR/DPR ferrules

See PSR/DPR instructions for fitting assembly

1. Adjust PSR/DPR pressure according to chart (A)
2. Insert the pre-assembly fixture in the tool mounting (weight approx. 5.5 kg).
3. Select the assembly cone (MOK) and backing plate (GHP) in accordance with the tube size and type. Check the assembly cone using a cone-template.
4. Place the assembly cone in the tool holder. Place the backing plate in the slot in the fixture.
5. Oil the ring, nut and assembly cone.
6. Slide the nut and ring onto the tube, which has been cut off square and deburred.
7. Place the tube with nut and progressive ring or cutting ring in the pre-assembly fixture between backing plate and assembly cone.
8. Press the tube against the stop in the assembly cone. Hold the tube in this position. Press and hold the start button until the pre-assembly process is completed.
9. Take the pre-assembled tube out of the backing plate. See EO PSR/DPR assembly instruction (chapter E) for assembly check and installation instructions.
10. Check assembly result before final installation.

Basic operation for 37° tube flaring

See Triple-Lok® instructions for fitting assembly

1. Adjust Triple-Lok® pressure according to chart (A)
2. Insert the tube flaring fixture in the toolmounting (weight approx. 19.5 kg).

3. Lubricate the flaring pin.
4. Insert the flaring die set corresponding to the tube size.
5. Push the nut and support sleeve onto the tube.
6. Push the tube through the flaring die hole to the stop plate. To prevent misalignment, longer tubes are to be supported during the flaring process.
7. Press and hold START button until flaring process is completed.
8. Lift the tube with the flaring die upwards out of the fixture.
9. To release the tube, place the flaring die set in the opening provided in the fixture and tilt the tube to one side.
10. Check assembly result before final installation.

Important!

Only proceed with pre-assembly when a tube with nut and cutting ring has been placed in the fixture (failure to observe this can result in damage to the tools). Longer tubes are to be suitably supported during pre-assembly.The assembly cones are to be regularly checked for correct dimensions using the cone-template and should be replaced when necessary.

Caution: do not reach into the working area of the pre-assembly fixture while it is operating!

Important!

Do not drive the flaring pin into the flaring die without a tube in position. The roughened surface of the flaring die must be absolutely free of oil and grease to prevent the tube from slipping.

Caution: do not reach into the working area of the flaring fixture while it is operating!

EOMAT UNI assembly and flaring machine

Pressure setting chart A

EOMAT UNI

Tube-O.D.	EO-2	PSR/DPR	Triple-Lok®
Ø (mm)	P (bar)	P (bar)	P (bar)
6	30	25	20
8	35	30	25
10	45	35	35
12	50	40	35
14	60	50	45
15	60	50	60
16	70	55	60
18	70	55	70
20	100	80	95
22	80	75	95
25	130	100	105
28	100	90	125
30	180	125	135
35	150	110	155
38	200	170	165
42	180	140	185
Installation	min. 60° max. 90°	~ 30°	min. 60° max. 90°

Steel (ST 37.4 NBK, ST 52.4 NBK, ...)

Stainless Steel (ST 1.4571, 1.4541, 1.4301, 316 Ti, ...)

The given values are a guide. The results of pre-assembly and/or tube flaring are therefore always to be checked.
For detailed instructions on tube preparation, tool selection, assembly check and final installation see chapter E.

EOMAT UNI assembly and flaring machine

Ordering

Type	Order code
EOMAT UNI Basic machine Ready to use, including operation manual Filled with hydraulic oil Without EO assembly fixture/Flaring fixture Without tools for EO-assembly/37° flaring Basic machine 230 V, 1 Phase, 50 Hz Rental (monthly usage)	EOMATUNI230V EOMATRENTFEE
Fixture for PSR/DPR/EO-2 assembly	EOMATSCHNEIDRX
37° Flaring fixture for Triple-Lok® including flaring pin	EOMATBOERDELBX
EOMAT UNI promotion leaflet UK	4042/UK
EOMAT UNI promotion leaflet DE	4042/DE
EOMAT UNI operating manual UK/DE/FR/IT	EOMATUNI/MANUAL
Standard preventive maintenance	EOMATUNI/INSPECTION

Assembly fixtures, tools, cone-templates, and lubricant must be ordered separately

Assembly tools for PSR/DPR/EO-2 see page H19.

37° flaring tools for Triple-Lok® see page H37.

Spare parts

Type	Order code
Fixing clip for MOK	EOMAT/CLIP
37° flaring pin	EOMAT/FLAREPIN
O-ring for flaring pin	EOMAT/0212500
Tube stop assembly for flaring block	EOMAT/0213800
Pressure chart sticker	EOMATUNI/CHART
Spring for flaring block	EOMAT/0213500

Kovaz.cz

EO PSR/DPR and EO-2 assembly tools for EO-KARRYMAT/EOMAT ECO/EOMAT UNI

Assembly cone MOK

Tube locating plate GHP

Cone-template KONU for MOK

Assembly fixture must be installed on EOMAT UNI II/III

Size		Order code				
Series	Tube-O.D.	Assembly cones for EO PSR/DPR MOK	Assembly cones for EO-2[3] MOK	Backing plates GHP	Distance control gauges AKL	Cone-templates KONU
LL	4	MOK04LLX	as MOK for PSR/DPR	GHP04X	AKL04LL	KONU04LL
	6	MOK06LLX		GHP06X	AKL06LL	KONU06LL
	8	MOK08LLX		GHP08X	AKL08LL	KONU08LL
	10	MOK10LLX		GHP10X	AKL10LL	KONU10LL
	12	MOK12LLX		GHP12X	AKL12LL	KONU12LL
L	6	MOK06LX	MOKEO206L	GHP06X[1])	AKL06LS	KONU06L[1])
	8	MOK08LX	MOKEO208L	GHP08X[1])	AKL08LS	KONU08L[1])
	10	MOK10LX	MOKEO210L	GHP10X[1])	AKL10L	KONU10L[1])
	12	MOK12LX	MOKEO212L	GHP12X[1])	AKL12L	KONU12L[1])
	15	MOK15LX	MOKEO215L	GHP15X	AKL15L	KONU15L
	18	MOK18LX	MOKEO218L	GHP18X	AKL18L	KONU18L
	22	MOK22LX	MOKEO222L	GHP22X	AKL22L	KONU22L
	28	MOK28LX	MOKEO228L	GHP28X	AKL28L	KONU28L
	35	MOK35LX	MOKEO235L	GHP35X[2])	AKL35L	KONU35L
	42	MOK42LX	MOKEO242L	GHP42X[2])	AKL42L	KONU42L
S	6	MOK06SX	MOKEO206S	GHP06X[1])	AKL06LS	KONU06L[1])
	8	MOK08SX	MOKEO208S	GHP08X[1])	AKL08LS	KONU08L[1])
	10	MOK10SX	MOKEO210S	GHP10X[1])	AKL10S	KONU10L[1])
	12	MOK12SX	MOKEO212S	GHP12X[1])	AKL12S	KONU12L[1])
	14	MOK14SX	MOKEO214S	GHP14X	AKL14S	KONU14S
	16	MOK16SX	MOKEO216S	GHP16X	AKL16S	KONU16S
	20	MOK20SX	MOKEO220S	GHP20X	AKL20S	KONU20S
	25	MOK25SX	MOKEO225S	GHP25X	AKL25S	KONU25S
	30	MOK30SX	MOKEO230S	GHP30X	AKL30S	KONU30S
	38	MOK38SX	MOKEO238S	GHP38X	AKL38S	KONU38S

Flaring tools see KARRYFLARE

1) Backing plates, cone-templates and flaring die sets for series L and S for tube outer diameter 6, 8, 10 and 12 are the same.
2) **Note:** Two-part backing plates for tube OD 35 and 42.
3) Special MOK for easy tube insertion. MOK for EO-2 are marked with groove.

Tool mounting rack

Practical rack for storing 10 pieces each assembly cone MOK and backing plate GHP.

Type	Order code
Tool mounting rack for GHP and MOK	EOMATWERKZGAUFN.X

Tool lifetime

Assembly tools are subject of wear and must be regularely (max. 50 assemblies) cleaned and checked (Checking instructions see chapter E). Worn out tools can cause dangerous assembly failures and must be replaced in time. Maximum lifetime can be achieved by following factors:

- Regular cleaning and checking
- Clean and corrosion-protected storage
- Proper de-burring and cleaning of tube end
- Proper tool selection and operation
- Use of specified lubricant
- MOK EO-2 don't wear out

Index

Ferulok assembly tools for EO-KARRYMAT/EOMAT ECO/EOMAT UNI

Assembly cone

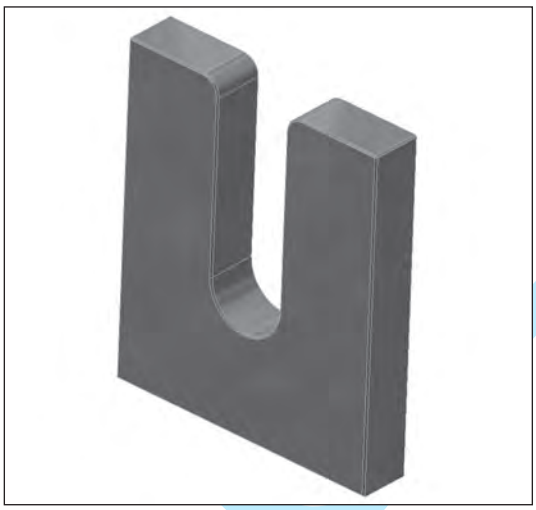

Back-up plate

Size		Order code	
Dash size	Tube-O.D. inch	Back-up plate	Assembly cone
4	1/4	975867-4	976521-4
6	3/8	975867-6	976521-6
8	1/2	975867-8	976521-8
10	5/8	975867-10	976521-10
12	3/4	975867-12	976521-12
14	7/8	975867-14	976521-14
16	1	975867-16	976521-16
20	1 1/4	975867-20	976521-20
24	1 1/2	975867-24	976521-24
32	2	975867-32	976521-32

Assembly tools for inch tube bite type FERULOK.
Machine setting according to correspondant size EO DPR.

Kovak

EOMAT PRO – Economic assembly machine for EO-2 and progressive ring fittings

The EOMAT PRO is a powerful machine for economical and safe tube installations. The device is designed for installation of Parker EO-2 and progressive ring fittings to DIN EN ISO 8483-1 (DIN 2352) with common tube materials (steel, stainless steel, copper, nylon). The EOMAT PRO is fast and quiet. It permits the assembly of very tight and complex tube bends. Automatic tool detection guarantees short set-up times and prevents errors due to setting the device incorrectly. Unlike conventional cutting ring assembly devices, the EOMAT PRO is stroke-controlled and produces accurate and reproducible assembly results.

The EOMAT PRO can be used in automatic or manual mode.

In automatic mode, the settings are read from a transponder chip in the tool. The operator cannot change the device settings in automatic mode.

In the display the tube diameter and the type of installation (EO-2 or progressive ring) will be shown.

There is also a useful piece counter which can be reset by the operator.

Other messages can appear about the assembly cones – for example, notifications about routine checks and tool lifetime.

If there is a significant, implausible variation, the display will show an error message. If universal MOK tools are used with universal parameters, this means that only implausible gross deviations will be displayed.

Adaptive assembly cones (MOK-RW) permit the operator to control and set the installation parameters and limits in a few simple steps. In this way the tool is optimized for the specific installation. These individual parameters deliver the best results for the tube material, wall thickness and lubricant used. The device will show slight deviations from the nominal values with a red warning light and a prompt in the display to check the installation. It is therefore possible to detect connections that have been incorrectly installed, check them and remove from the process if needed (e.g. the ring was mounted the wrong way around).

Automatic tool detection, the stored installation values and the display of error messages (red warning light and display) cannot be deactivated in automatic mode by the operator.

In manual mode, different installation values can be set. Manual mode is activated using a key switch. The key is supplied with every device.

The device comes in two versions:

- The quick EOMAT PRO22 for tube sizes up to 20-S/22-L. It has a compact assembly head for tight tube bends.
- The powerful EOMAT PRO42 with a robust assembly head for all sizes up to 38-S/42-L.

Technical data

Application:	Economical mass production of Parker EO tube connections Installation of Parker EO-2 and progressive stop ring (PSR) fittings Installation of cutting ring fittings in accordance with DIN EN ISO 8434-1
Process:	Automatic mode PSR: Stroke-controlled assembly with plausibility check Manual mode and EO-2: Pressure-controlled assembly without error detection
Installation requires:	EO-2: Gap to be closed PSR: 1½ turns of the union nut Other products: See the manufacturer's documentation
Tube material:	Steel, stainless steel, copper, nylon
Tube specification:	All permitted tubes for use with Parker EO couplings
Tube diameter:	EOMAT PRO22: 4 to 22 mm (except for EO-2 – 20-S) EOMAT PRO42: 4 to 42 mm
Range:	LL, L and S
Min. U-bend:	EOMAT PRO22: approx. 35 mm EOMAT PRO42: approx. 70 mm
Tool Identification:	Uses RFID technology, the transponder is in the MOK assembly cone
Error detection:	Plausibility check of the installation parameters after installation
Display:	Text messages and warning light
Available languages:	German, English, French, Spanish, Italian
Display:	Automatic mode: Type of fitting, tube diameter and range Manual mode: Pressure set Piece counter (resettable)
Error messages:	"Check installation result" in the case of non-plausible installation parameters. Reminder to check the tool after every 50 uses. Reminder to change the tool when the end of its lifetime is reached. Warnings about critical hydraulic oil level and temperature.

Speed:	EOMAT PRO 22: ca 1.0 s stroke distance, ca 8–10 s total cycle time EOMAT PRO 42: ca 2.0 s stroke distance, ca 10–12 s total cycle time
Economic production quantity:	above 100 assemblies per day
Operating duration:	100%
Noise:	Less than 75 dB (A)
Ambient temperature:	0 °C to +40 °C
Storage temperature:	–25 °C to +60 °C
Parameters:	No condensing humidity
Dimensions:	L 620 mm×W 735 mm×H 340 mm
Weight:	90 kg
Operational resources:	Esso Hydraulic Oil Nuto H32 or equivalent (filled for delivery)
Electrical power:	400 V 3-phase 50 Hz 1100 W
Cable:	5 m cable with CEE 16 A phase-inverter plug
Tools:	EOMAT PRO 22: MOK PRO assembly cones and MOS compact rear supports EOMAT PRO 42: MOK PRO assembly cones and GHP standard backing plates
Lubricant:	EO-NIROMONT
Test equipment:	AKL distance gauges

EOMAT PRO – features, advantages and benefits

- Low unit costs due to its fast and efficient hydraulic drive
- Compact assembly head for tight and complex bends
- Long lifespan of the assembly tools
- Settings are automatically read from the tool
- Stroke-control achieves a consistently good fitting result
- In automatic mode the operator cannot adjust the installation parameters
- A display showing the number of pieces processed and any error messages
- Adaptive tools for optimal installation parameters and the best possible error detection
- Oil volume and the heat capacity is designed to cope with mass assembly under continuous or shift working patterns
- The foot switch allows the operator a high degree of flexibility

Operation

Detailed installation instructions and safety information can be found in the operation manual

1. Insert the assembly cone and backing plate
2. In automatic mode, the display shows the mounting type and dimensions
3. Fit the tube with the union nut and ring
4. Press and hold the START button
5. Hold the tube securely through the whole assembly process and push it into the limit stop
6. The assembly process is finished when the cylinder moves back to the starting position
7. Assembly inspection and final assembly is done according to the assembly instructions (see chapter E)

Tool lifetime

Assembly tools are subject to wear, and must be periodically (at least every 50 assemblies) cleaned and inspected (inspection instructions, see chapter E) Worn tools can cause dangerous assembly failures, and need to be replaced in good time. High tool life can be achieved by:

- Regular cleaning and lubrication
- Store protected from dirt and corrosion
- Careful trimming and cleaning of the tube ends
- Proper tool selection and operation
- Use of the recommended lubricant

The MOK PRO assembly cones are made from wear-resistant tool steel, and are therefore suited to mass production. After this lifespan is reached, the display will show that a tool change is needed. The worn tool should be **replaced,** it will no longer work in automatic mode. Worn assembly cones can be used after the end of their expected lifespan in manual mode with care.

Machine/Item	Order code
EOMAT PRO machine, ready to use, with key for selection switch Auto/Manual, with operation manual, filled with hydraulic oil, without tooling and accessories	
EOMAT PRO22 Tube-OD 4–22 mm 400 V, 50 Hz, 3 Phase Renting (monthly rate) Leasing (2 year hire purchase)	EOMATPRO22400V EOMATPRORENTFEE EOMATPROLEASEFEE
EOMAT PRO42 Tube-OD 4–42 mm 400 V, 50 Hz, 3 Phase Renting (monthly hire rate) Leasing (2 year hire purchase)	EOMATPRO42400V EOMATPRORENTFEE EOMATPROLEASEFEE
Accessoires/Item	
EO-NIROMONT Liquid lubricant in a brush-in-cap can (250 cc)	EONIROMONTAPPLICATOR
Foot switch	FOOTSWITCHSAFETYKIT
Fixing clamp for MOK	EOMATPRO/CLIP
Spare key for selection switch	EOMATPRO/KEY
EOMAT PRO promotion leaflet UK	4043 via Parker Catalogueservice EMDC
Operation manual UK/DE/FR/IT/ES	EOMATPRO/MANUAL
Standard preventive maintenance	EOMATPRO/INSPECTION

kovaci.cz

Assembly tools for EO fittings

Size		Tool order code						
Series	Pipe OD (mm)	Adaptive assembly cone for progressive ring	Standard assembly cone for progressive ring	Standard assembly cone for EO-2	Backing plate for EOMAT PRO42	Compact backing plate for EOMAT PRO22	Distance gauge only for pro-gressive ring	Cone template for assembly cone
LL	04	MOK04LLPRORW	MOK04LLPRO	–	GHP04X	GHP04PRO	AKL04LL	KONU04LL
	06	MOK06LLPRORW	MOK06LLPRO	–	GHP06X	GHP06PRO	AKL06LL	KONU06LL
	08	MOK08LLPRORW	MOK08LLPRO	–	GHP08X	GHP08PRO	AKL08LL	KONU08LL
	10	MOK10LLPRORW	MOK10LLPRO	–	GHP10X	GHP10PRO	AKL10LL	KONU10LL
	12	MOK12LLPRORW	MOK12LLPRO	–	GHP12X	GHP12PRO	AKL12LL	KONU12LL
L	06	MOK06LPRORW	MOK06LPRO	MOKEO206LPRO	GHO06X	GHP06PRO	AKL06LS	KONU06L
	08	MOK08LPRORW	MOK08LPRO	MOKEO208LPRO	GHP08X	GHP08PRO	AKL08LS	KONU08L
	10	MOK10LPRORW	MOK10LPRO	MOKEO210LPRO	GHP10X	GHP10PRO	AKL10LL	KONU10L
	12	MOK12LPRORW	MOK12LPRO	MOKEO212LPRO	GHP12X	GHP12PRO	AKL12LL	KONU12L
	15	MOK15LPRORW	MOK15LPRO	MOKEO215LPRO	GHP15X	GHP15PRO	AKL15L	KONU15L
	18	MOK18LPRORW	MOK18LPRO	MOKEO218LPRO	GHP18X	GHP18PRO	AKL18L	KONU18L
	22	MOK22LPRORW	MOK22LPRO	MOKEO222LPRO	GHP22X	GHP22PRO	AKL22L	KONU22L
	28	MOK28LPRORW	MOK28LPRO	MOKEO228LPRO	GHP28X	–	AKL28L	KONU28L
	35	MOK35LPRORW	MOK35LPRO	MOKEO235LPRO	GHP35X	–	AKL35L	KONU35L
	42	MOK42LPRORW	MOK42LPRO	MOKEO242LPRO	GHP42X	–	AKL42L	KONU42L
S	06	MOK06SPRORW	MOK06SPRO	MOKEO206SPRO	GHP06X	GHP06PRO	AKL06LS	KONU06L
	08	MOK08SPRORW	MOK08SPRO	MOKEO208SPRO	GHP08X	GHP08PRO	AKL08LS	KONU08L
	10	MOK10SPRORW	MOK10SPRO	MOKEO210SPRO	GHP10X	GHP10PRO	AKL10S	KONU10L
	12	MOK12SPRORW	MOK12SPRO	MOKEO212SPRO	GHP12X	GHP12PRO	AKL12S	KONU12L
	14	MOK14SPRORW	MOK14SPRO	MOKEO214SPRO	GHP14X	GHP14PRO	AKL14S	KONU14S
	16	MOK16SPRORW	MOK16SPRO	MOKEO216SPRO	GHP16X	GHP16PRO	AKL16S	KONU16S
	20	MOK20SPRORW	MOK20SPRO	MOKEO220SPRO	GHP20X	GHP20PRO	AKL20S	KONU20S
	25	MOK25SPRORW	MOK25SPRO	MOKEO225SPRO	GHP25X	–	AKL25S	KONU25S
	30	MOK30SPRORW	MOK30SPRO	MOKEO230SPRO	GHP30X	–	AKL30S	KONU30S
	38	MOK38SPRORW	MOK38SPRO	MOKEO238SPRO	GHP38X	–	AKL38S	KONU38S
		Programmable with individual parameters for plausibility checks	Programmed with universal parameters without effective error detection	Programmed with universal parameters without effective error detection	Also suitable for EO-KARRYMAT and all EOMAT devices from Parker	Only suitable for the EOMAT PRO 22 device from Parker	To check the assembly result of Parker EO Progressive rings (not for EO-2)	To check wear of MOK assembly cones for progressive rings (not MOK EO-2)

H

The WorkCenter F3

All aboard

The WorkCenter F3 is completely automatic in operation and has been designed for practical workshop application. Opening the doors turns the machine into a totally equipped WorkCenter. The tool storage area is located in the front – the tools are neatly laid out and easily viewed. No other workbenches or tool racks are required. Special convenient-to-handle tools make the machine set-ups and tool changes easier. Thanks to automatic tool recognition, the operator has only to press the start button, whereupon the tube is formed into the correct shape in one pass. This means that EO2-FORM and EO-3® connections are extremely simple to manufacture. The WorkCenter F3 is so reliable because of its powerful hydraulic drive and robust forming tools.

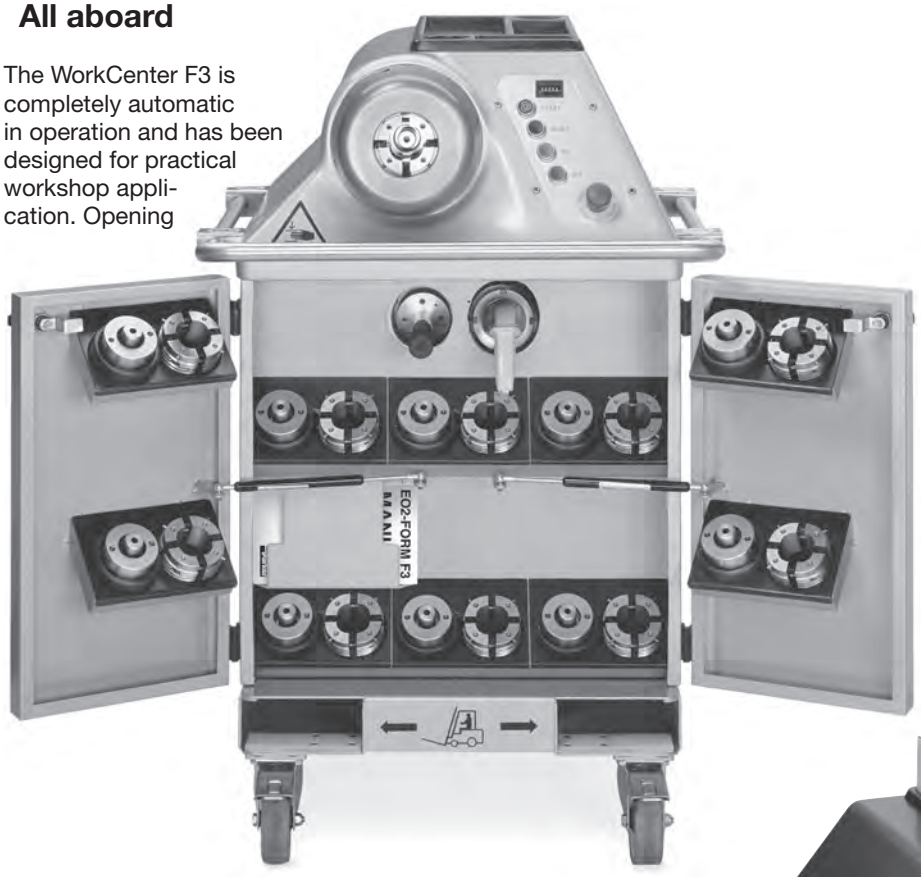

- Workshop machine for universal use
- 6 to 38/42 mm tube OD
- Cycle time approx. 20 seconds
- Especially advantageous for: Hydraulic presses, cranes and lifts, heavy machinery, shipbuilding, offshore and hydraulic steelworks

The WorkCenter PRO22

Mass production without tears

The WorkCenter PRO22 is based on proven EO2-FORM technology and was specially designed for the economic production of EO2-FORM tube fittings. Compared with the WorkCenter F3, the PRO22 production machine works considerably more efficiently and can machine tighter tube bends. Because of its powerful drive and efficient cooling, continuous mass production on a shift-work basis is provided for. In addition, the machine is especially quiet and vibration-free in operation. Small to medium tubes from 6 to 22 mm can be accommodated on the new machine. The compact assembly head enables even tight tube bends to be machined.

- Production machine for economical and fail-safe manufacturing
- 6 to 22 mm tube OD
- Cycle time approx. 6 seconds
- Advantageous for applications such as: manufacturers of agricultural machinery, construction machines, trucks, fork lift trucks and other mass-produced hydraulic equipment

EO-KARRYFORM

Lightweight. Portable. Cost Saving.

With the portable EO-KARRYFORM forming machine tear-out resistant tube connectors in steel and stainless steel can be done directly at the point of installation.

The EO-KARRYFORM can produce tubes with outside diameters ranging from six to 42 mm. The EO-KARRYFORM consists of a hydraulic drive unit in a mobile trolley and a forming cylinder, which can be safely connected by means of Parker hydraulic hoses and quick couplings. The tools, consisting of clamping dies and forming pins plus insertion tools, are transportable separately in a dedicated tool box. This lightweight machine, weighs approximately 135 kg, allowing it to be quickly and safely transported in, for example, a suitable van to the assembly point.

The EO-KARRYFORM concept is cost saving because F3 and PRO22 WorkCenter tools can also be used for forming processes. Cycle time is approximately 20 seconds and the smallest 180° elbow is 115 mm. This new machine can be easily deployed for both mobile service on-site directly at the assembly point, and also for conventional workshop operation.

- Portable machine for the production of tear-out tube connections
- 6 to 38/42 mm tube OD
- Cycle time approx. 20 seconds
- Benefical for: Workshops, directly at the assembly point

H

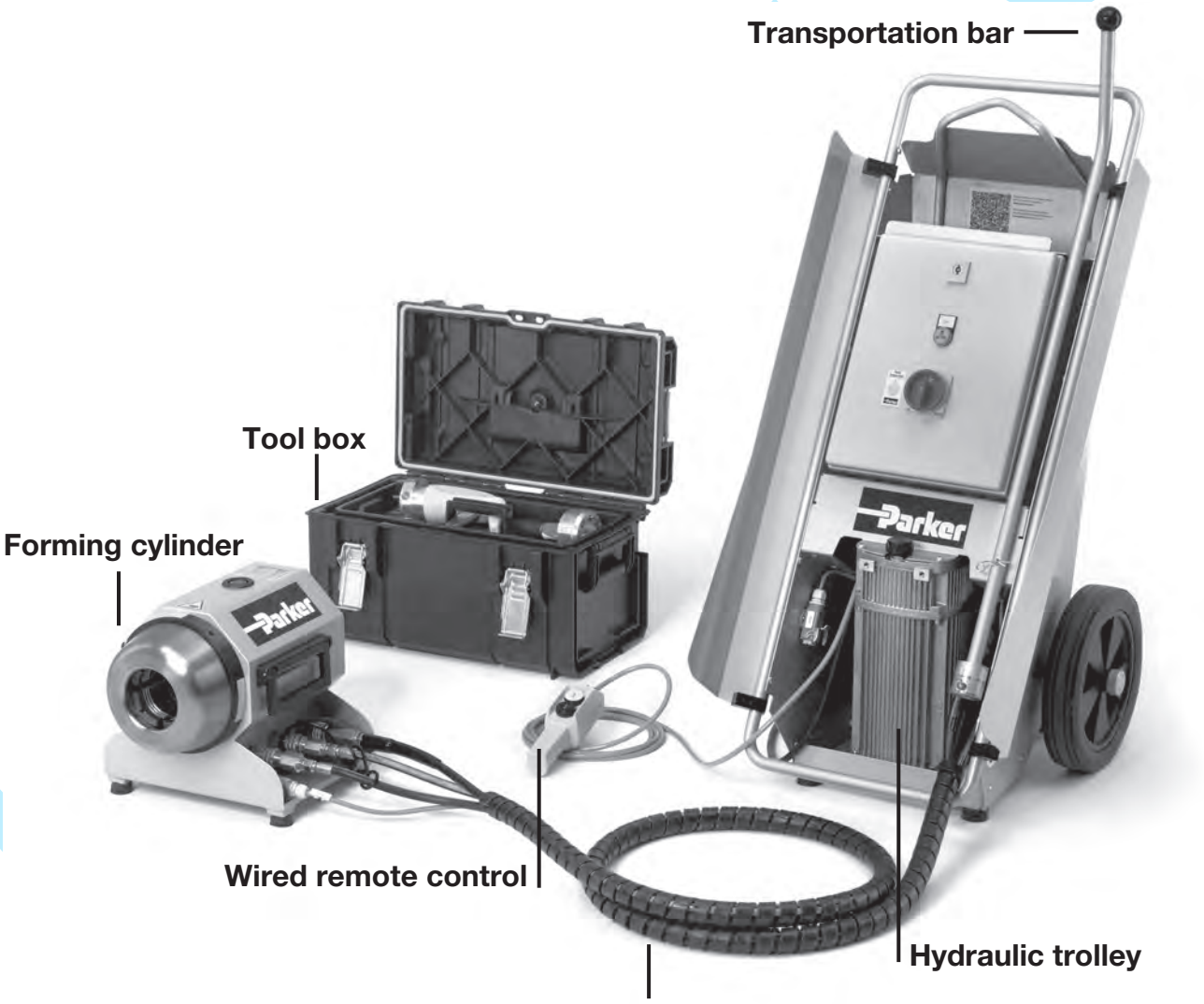

WorkCenter F3, PRO22 and EO-KARRYFORM

Technical Data	
Machine	**WorkCenter F3, PRO22 and EO-KARRYFORM**
Designated use	Cold forming of tube ends for tube connections
Method	Axial swaging
Suitable for	EO tube fittings to DIN EN ISO 8434-1, EO-3® fittings
	Hose Connections to DIN 71550
Tube specification	
Steel tubing	E235 / ST37.4; E355 / ST52.4
Stainless steel tubing	1.4571
Other materials	CuNiFe, duplex and others on request
Boiler tube	Tubes for turbine construction on request
Tools	Interchangeable
Forming die sets	“MF3” single part forming die sets, one type for each tube OD
Forming pin	“BF3” forming pin with inner mandrel, one type each per tube OD, wall thickness and material
Function	
Tool change	Manual
Setting	WorkCenter: Automatic tool recognition and pressure setting EO-KARRYFORM: Pressure setting acc. to pressure table
Tube clamping	Hydraulic
Forming	Hydraulic
Controls	Automatic sequence: after pressing START button: Clamp – form – withdraw – unclamp
Environmental conditions	
Working temperature	WorkCenter: +10 … +50°C EO-KARRYFORM: +10 ... +40°C
Relative humidity	Msc. 90%, non-condensing

Type	WorkCenter F3	WorkCenter PRO22	EO-KARRYFORM
Specifications			
Type	Universal workshop machine	Powerful production machine	Portable forming machine
Design	WorkCenter	WorkCenter	Portable machine for repair and workshop tasks
Application	Alternative to welding	Efficient mass production	Alternative to welding
Weight	Approx. 330 kg	Approx. 375 kg	Hydraulic drive unit: 69 kg Forming cylinder: 67.5 kg Tool box: approx. 10 kg
Dimensions (L×B×H)	660 × 800 (open: 1,300)×1,150	660 × 800 (open: 1,300)×1,200	Drive Unit: 500 x 600 x 1200 Forming cylinder: 330 x 420 x 325 Tool box: 335 x 550 x 310 Length of hydraulic hoses: 3150
Electrical supply	400 V, 50 Hz, 3 phase 230 V, 50 Hz, 3 phase 440 V, 60 Hz, 3 phase	400 V, 50 Hz, 3 phase	230 V, 50 Hz, 1 phase
Electric motor drive rating	4 kW	4 kW	1.1 kW
Oil cooler	Optional	Standard	–
Performance data			
Steel tube	6×1 ... 38×7/42×4	6×1 … 20×2/22×2	6×1 ... 38×5/42×4
Stainless steel tube	6×1 … 38×5/42×3	6×1 … 20×2/22×2	6×1 … 38×4/42×3
Minimum width U-bend	Approx. 135 mm	Approx. 100 mm	Approx. 115 mm
Cycle time	15–20 sec.	Ca. 6 sec.	15–20 sec.
Economic production quantitiy	Max. 100 formings/hour Max. 200 forming/hour (with oil cooler)	Max. 600 formings/hour	Max. 100 formings/hour
Applications	Ideal for project and workshop tasks, small batches and on-site installations. Tubes of all sizes.	Economic mass production of small to medium tube dimensions	Ideal for repair, installation projects and workshop tasks for small batches. Tubes of all sizes.

Features, advantages and benefits

1. **Process / Product concept** – The EO2-FORM technology is not a stand-alone machine or a new fitting system. It is a product extension of the EO-2 range which has existed since 1993. Exactly the same, proven seal elements are used.

2. **Workcenter concept** – All tools, handling devices, lubricants and the operator manual are well organised inside the machine. Once the doors are opened, the machine turns into a stand-alone workcenter for tube preparation. On the top shelf, there are practical compartments for rules, pens, lubricant and standard EO-boxes with nuts and sealing rings. No additional workbenches or shelves for tooling are required.

3. **Easy operation** – One single START-button is all that needs to be operated to run a forming cycle completely. No “zero position” or “reset” activities have to be performed in-between two forming cycles. For efficient mass production, a foot switch is available. A label on the machine head shows all operation steps in pictograms and all important dimensions in charts.

4. **Easy tool change** – An ergonomic, pistol-like device allows quick and easy change of the one-piece clamping die set without opening the forming head or even touching the tools. Another handle speeds up the setup process of the forming pin in the bayonet mechanism.

5. **Easy handling** – Standard tools and one set of EO-2 sealing rings are suitable for all common hydraulic tube dimensions. No special sleeves are required for thin wall or small diameter tube.

6. **Well organised** – All tools and accessories are well organised in a practical compartment inside the machine housing. Nothing gets dirty, lost or confused.

7. **Easy transport** – The machine is equipped with heavy duty wheels so that it can be moved around by one person without hard work or additional equipment. Special attachments for crane and forklift truck transport are standard. A reeling serves as handle, protection and attachment for fixing belts when transported by truck. Tools and all accessories are safely and cleanly stored inside.

8. **Easy logistics** – EO2-FORM uses the same components as EO-2. Special sets of nuts and sealing rings can be ordered with one part number (FORM …). This reduces ordering effort and contributes to achieve availability with optimum inventory.

9. **Stainless steel capabilities** – Forming pins for stainless steel tubes are specially designed for optimum forming results and surface coated for maximum lifetime. All forming pins for stainless steel tube are marked with a blue dot. Clamping dies can be used for both, steel and stainless steel tube.

10. **Approved functional system** – EO2-FORM has been on market for years. It is approved for use in shipbuilding, offshore industry, hydraulic water lock systems, press and crane manufacturing, heavy mobile equipment and general machine building. EO2-FORM is tested and approved from authorities like German Lloyd, DNV or from end-users like Daimler-Chrysler.

11. **Cost saving** – Compared to welding or brazing, EO2-FORM and EO-3® are much less time consuming. Special tube preparation and finishing are not necessary. Cold forming uses only a fraction of the energy needed for brazing or welding.

12. **Superior vibration resistance** – The process achieves a smooth structural transformation of the tube wall. There are no sharp edges or notches to reduce the vibration resistance.

13. **Superior mechanical strength** – The working contact area of the EO2-FORM connection is the flat front surface of the metal support ring which is made of heat-treated, high-strength steel or stainless steel. This provides superior mechanical strength without settling, loosening or need for re-tightening.

14. **Universal** – The WorkCenter can cold-form all common steel and stainless steel tube materials for hydraulic pipework. Even exotic materials such as Cu-NiFe or Duplex can be formed. The tools cover metric tube sizes from 6 to 42 mm OD.

15. **Short tube ends** – The compact clamping device and special dies are suitable for machining complex tube bends.

16. **Noise/energy loss reduction** – The process results in a smooth inner contour of the tube. Minimum pressure drop, heat and noise is created. No hidden corners allow the accumulation of air, dirt or other sources of trouble.

17. **Clean** – The process is environmental clean and safe. As no heat is used, hazards from fumes or heat do not occur.

18. **Zinc plated tubing** – The process allows the use of zinc-plated tubing. The costs of cleaning or painting are saved.

19. **Quality** – Tube clamping and tool functions are fully automated. Proper joint geometry and seal dimensions are achieved by using standard EO-2 sealing rings. Therefore high and consistent quality is achieved without manual adjustment.

20. **Proven Technology** – Since 1993, millions of EO-2 fittings have operated worldwide under heavy duty conditions, providing leak-free hydraulic systems.

21. **No restrictions** – The process allows to use EO-2 elastomeric sealing technology even for applications where bite-type connectors are not permitted by safety standards, for example hydraulic presses, cranes, lifts or ship canal systems locks.

WorkCenter for EO2-FORM and EO-3® high pressure tube connections

Machine Type	Order code F3	Order code PRO22	Order code EO-KARRYFORM
WorkCenter basic unit for forming tube ends, ready to operate with magnetic gripper, holder and operator's handbook, but without tools, packed in a special transportation box			
Universal F3 WorkCenter Tube OD 6–38/42 mm 400 V, 50 Hz, 3 phase 230 V, 50 Hz, 3 phase 440 V, 60 Hz, 3 phase Rental (monthly usage) Leasing (24 leasing rate)	 EO2FORMF3400V EO2FORMF3230V EO2FORMF3440V EO2FORMF3RENTFEE EO2FORMF3LEASEFEE	 EO2FORM400VPRO EO2FORMPRORENTFEE EO2FORMPROLEASEFEE	
Mobile transportable device Tube OD 6-38/42 mm 230 V, 50 Hz, 1 phase Rental (monthly usage) Leasing (24 leasing rate)			 EOKARRYFORM230V EOKARRYFORMRENTFEE EOKARRYFORMLEASEFEE

Accessories Type	Order code F3	Order code PRO22	Order code EO-KARRYFORM
Lubrication for forming pin: EO-NIROMONT Liquid lubricant in a brush-in-cap (250 cc) 0.25 L bottle EO-NIROMONT 1L re-fill pack EO-NIROMONT	 EONIROMONTAPPLICATOR EONIROMONTFLUESSX LUBSS	 EONIROMONTAPPLICATOR EONIROMONTFLUESSX LUBSS	 EONIROMONTAPPLICATOR EONIROMONTFLUESSX LUBSS
Oil cooler kit	F3/COOLERKIT	included	–
Foot switch	F3/FOOTSWITCH	F3/FOOTSWITCH	F3/FOOTSWITCH
Magnetic gripper for forming pin	F3/PINHOLDER	F3/PINHOLDER	F3/PINHOLDER
Holder for forming die set	F3/DIEHOLDER	F3/DIEHOLDER	F3/DIEHOLDER
Clamping segments for die set	F3/DIECLAMP	F3/DIECLAMP	F3/DIECLAMP
Clamping segment spring Ø 8 mm	F3/DIECLAMPSPRING8	F3/DIECLAMPSPRING8	F3/DIECLAMPSPRING8
Clamping segment spring Ø 12 mm	F3/DIECLAMPSPRING12	F3/DIECLAMPSRING12	F3/DIECLAMPSRING12
Operation manual: UK, DE, FR, IT, SWE	4033	EO2FORMPRO/MANUAL	4034
Standard preventive maintenance	EO2FORMF3/INSPECTION	EO2FORMF3/INSPECTION	EOKARRYFORM/INSPECTION

WorkCenter are shipped in special containers which should be kept for future transports to avoid damage. Please don't dispose the transport boxes!

Machine housing Type	Order code F3	Order code PRO22	Order code EO-KARRYFORM
Top machine cover	F3/HEADCOVER	F3PRO/08836014	–
Top tray	F3/TOPTRAY	F3/TOPTRAY	–
Door lock for tool compartment	F3/DOORLOCK	F3/DOORLOCK	–
Door hinge	F3/DOORHINGE	F3/DOORHINGE	–
Shock absorber for doors	F3/DOORSPRING	F3/DOORSPRING	–
Tool tray for inner tool compartment (top), 6×	F3/TOOLTRAYIN	F3/TOOLTRAYIN	–
Tool tray for inner tool compartment (bottom), 6×	F3/0883611	F3/0883611	–
Tool tray for tool compartment in doors, 2×	F3/TOOLTRAYDOOR	F3/TOOLTRAYDOOR	–
Die insert for tool tray (use screw M6)	F3/TOOLTRAYPIN	F3/TOOLTRAYPIN	–
Holder for magnetic gripper	F3/PINHOLDERTRAY	F3/PINHOLDERTRAY	–
Holder for holder	F3/DIEHOLDERTRAY	F3/DIEHOLDERTRAY	–
Plastic guide for forklift (use screw M6)	F3/FORKGUIDE	F3/FORKGUIDE	–
Front wheel with lock	F3/FRONTWHEEL	F3/FRONTWHEEL	–
Rear wheel	F3/BACKWHEEL	F3/BACKWHEEL	–

Sticker Type	Order code F3	Order code PRO22	Order code EO-KARRYFORM
Door label	F3/STICKERPARKER	F3PRO/STICKERPARKER	–
Short instructions on side	F3/STICKERINSTRUC	F3PRO/STICKERINSTRUC	–
Lubrication on front	F3/STICKERLUB	F3/STICKERLUB	–
Crane attachment (1 piece)	F3/STICKERCRANE	F3/STICKERCRANE	–
Forklift on front	F3/STICKERFORK	F3/STICKERFORK	–

Operation panel Type	Order code F3	Order code PRO22	Order code EO-KARRYFORM
Front panel counter	F3/FRONTCOUNTER	F3/FRONTCOUNTER	–
“START” switch (black with symbol)	F3/STARTSWITCH	F3/STARTSWITCH	–
“RESET” switch (blue)	F3/RESETSWITCH	F3/RESETSWITCH	–
“ON” switch (green)	F3/ONSWITCH	F3/ONSWITCH	–
“OFF” switch (red)	F3/OFFSWITCH	F3/OFFSWITCH	–
Emergency stop switch (red)	F3/STOPSWITCH	F3/STOPSWITCH	–

Tool Components Type	Order code F3	Order code PRO22	Order code EO-KARRYFORM
Bayonet bolt for forming pin	F2/PINBOLT	F2/PINBOLT	F2/PINBOLT
Screw for clamping die segments	F3/DIESCREW	F3/DIESCREW	F3/DIESCREW
Spare part kit for clamping die set (4× Pin Ø4, 4× Spring Ø8, 4× Spring Ø12, 4× Screws)	F3/DIEKIT	F3/DIEKIT	F3/DIEKIT

WorkCenter for EO2-FORM and EO-3® high pressure tube connections

Clamping die set MF3EO2

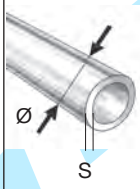

Forming pin BF3EO2

Forming pin BF3P3

Tube O.D. Ø	Clamping dies for steel tubes Order code	Clamping dies for stainless steel tubes Order code	Ø × s	Forming pin for steel tubes Order code	Forming pin for stainless steel tubes Order code[1)2)]	EO-3® forming pin Order code
06-L/S	MF3EO2P306	MF3EO2P306	06×1.0 06×1.5 06×2.0	BF3EO206X1S BF3EO206X1.5S BF3EO206X2S	BF3EO206X1SS BF3EO206X1.5SS	BF3P306X1 BF3P306X1.5
08-L/S	MF3EO2P308	MF3EO2P308	08×1.0 08×1.5 08×2.0 08×2.5	BF3EO208X1S BF3EO208X1.5S BF3EO208X2S *BF3EO208X2.5S*	BF3EO208X1SS BF3EO208X1.5SS	BF3P308X1 BF3P308X1.5
10-L	MF3EO2P310	MF3EO2P310	10×1.0 10×1.5 10×2.0	BF3EO210LX1S BF3EO210LX1.5S BF3EO210LX2S	BF3EO210LX1SS BF3EO210LX1.5SS BF3EO210LX2SS	BF3P310X1.5
10-S	MF3EO2P310	MF3EO2P310	10×1.5 10×2.0 10×3.0	BF3EO210SX1.5S BF3EO210SX2S *BF3EO210SX3S*	BF3EO210SX1.5SS BF3EO210SX2SS	BF3P310X1.5
12-L	MF3EO2P312	MF3EO2P312	12×1.5 12×2.0	BF3EO212LX1.5S BF3EO212LX2S	BF3EO212LX1.5SS BF3EO212LX2SS	BF3P312X1.5 BF3P312X2
12-S	MF3EO2P312	MF3EO2P312	12×1.5 12×2.0 12×3.0	BF3EO212SX1.5S BF3EO212SX2S *BF3EO212SX3S*	BF3EO212SX1.5SS BF3EO212SX2SS	BF3P312X1.5 BF3P312X2
15-L	MF3EO2P315	MF3EO2P315	15×1.0 15×1.5 15×2.0	BF3EO215X1S BF3EO215X1.5S BF3EO215X2S	BF3EO215X1.5SS BF3EO215X2SS	BF3P315X1.5 BF3P315X2
16-S	MF3EO2P316	MF3EO2P316SS	16×2.0 16×2.5 16×3.0	BF3EO216X2S *BF3EO216X2.5S* *BF3EO216X3S*	BF3EO216X2SS *BF3EO216X2.5SS* *BF3EO216X3SS*	BF3P316X2

WorkCenter for EO2-FORM and EO-3® high pressure tube connections

Tube O.D. Ø	Clamping dies for steel tubes Order code	Clamping dies for stainless steel tubes Order code	Ø × s	Forming pin for steel tubes Order code	Forming pin for stainless steel tubes Order code[1)2)]	EO-3® forming pin Order code
18-L	MF3EO2P318	MF3EO2P318SS	18×1.5 18×2.0	BF3EO218X1.5S BF3EO218X2S	BF3EO218X1.5SS BF3EO218X2SS	BF3P318X1.5 BF3P318X2
20-S	MF3EO2P320	MF3EO2P320SS	20×2.0 20×2.5 20×3.0 20×3.5	BF3EO220X2S *BF3EO220X2.5S* *BF3EO220X3S* *BF3EO220X3.5S*	BF3EO220X2SS *BF3EO220X2.5SS* *BF3EO220X3SS*	BF3P320X2 *BF3P320X2.5*
22-L	MF3EO2P322	MF3EO2P322SS	22×1.5 22×2.0	BF3EO222X1.5S BF3EO222X2S	BF3EO222X1.5SS BF3EO222X2SS	 BF3P322X2
25-S	*MF3EO2P325*	*MF3EO2P325SS*	25×2.0 25×2.5 25×3.0 25×4.0	*BF3EO225X2S* *BF3EO225X2.5S* *BF3EO225X3S* *BF3EO225X4S*	*BF3EO225X2SS* *BF3EO225X2.5SS* *BF3EO225X3SS*	 *BF3P325X2.5* *BF3P325X3*
28-L	*MF3EO2P328*	*MF3EO2P328SS*	28×2.0 28×2.5 28×3.0	*BF3EO228X2S* *BF3EO228X2.5S* *BF3EO228X3S*	*BF3EO228X2SS* *BF3EO228X2.5SS*	*BF3P328X2*
30-S	*MF3EO2P330*	*MF3EO2P330SS*	30×2.5 30×3.0 30×4.0 30×5.0	 *BF3EO230X3S* *BF3EO230X4S* *BF3EO230X5S*	 *BF3EO230X3SS* *BF3EO230X4SS*	*BF3P330X2.5* *BF3P330X3* *BF3P330X4*
35-L	*MF3EO2P335*	*MF3EO2P335SS*	35×2.0 35×2.5 35×3.0	*BF3EO235X2S* *BF3EO235X3S*	*BF3EO235X2SS* *BF3EO235X2.5SS* *BF3EO235X3SS*	 *BF3P335X2.5* *BF3P335X3*
38-S	*MF3EO2P338*	*MF3EO2P338SS*	38×3.0 38×4.0 38×5.0 38×6/7	*BF3EO238X3S* *BF3EO238X4S* *BF3EO238X5S* *BF3EO238X6+7S*	*BF3EO238X3SS* *BF3EO238X4SS* *BF3EO238X5SS*	*BF3P338X3* *BF3P338X4* *BF3P338X5*
42-L	*MF3EO2P342*	*MF3EO2P342SS*	42×2.0 42×3.0	*BF3EO242X2S* *BF3EO242X3S*	*BF3EO242X2SS* *BF3EO242X3SS*	 *BF3P342X3*

Tools for hose connection DIN 71550

Clamping die set MF3EO-2 and EO-3®

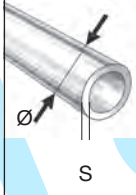

Forming pin BF3EO-2

Tube O.D. Ø	Clamping dies for steel and stainless steel tubes Order code	Ø × s	Forming pin for steel tubes Order code	Forming pin for stainless steel tubes Order code[1)2)]
10	MF3EO2P310	10×1.5	BF3DIN7155010X1.5S	
12	MF3EO2P312	12×1.5	BF3DIN7155012X1.5S	BF3DIN7155012X1.5SS
15	MF3EO2P315	15×2.0	BF3DIN7155015X2S	
18	MF3EO2P318	18×1.5	BF3DIN7155018X1.5S	
20	MF3EO2P320	20×2.5	BF3DIN7155020X2.5S	
22	MF3EO2P322	22×1.5	BF3DIN7155022X1.5S	BF3DIN7155022X1.5SS
25	MF3EO2P325	25×2.0	BF3DIN7155025X2S	BF3DIN7155025X2SS
28	MF3EO2P328	28×1.5 28×2.0	BF3DIN7155028X1.5S	BF3DIN7155028X1.5SS BF3DIN7155028X2SS
30	MF3EO2P330	30×1.5		BF3DIN7155030X1.5SS
32	MF3EO2P332	32×1.5	BF3DIN7155032X1.5S	
35	MF3EO2P335	35×2.0		BF3DIN7155035X2SS

Tool compatibility:

***Italic* = Tools for EO2-FORM F3 WorkCenter**
Regular = Tools for EO2-FORM F3 and PRO22 WorkCenter

Tool lifetime
Assembly tools are subject of wear and must be regularely (max. 50 assemblies) cleaned and checked (Checking instructions see chapter E). Worn out tools can cause dangerous assembly failures and must be replaced in time. Maximum lifetime can be achieved by following factors:

Please select clamping die and forming pin according to tube dimension and material.
1) All forming pins for stainless steel tubing are marked with a blue dot on front surface.
2) Stainless steel tools are TiN coated.
Clamping die sets which are only used for stainless steel tubes should be marked with the blue dot sticker to avoid use with steel tube.

- Regular cleaning and checking
- Clean and corrosion-protected storage
- Proper de-burring and cleaning of tube end
- Proper tool selection and operation
- Use of specified lubricant

Flaring tools for Triple-Lok® tubes

Flaring tool selection guide

Manual flaring devices are available for on-site assembly and field repair of Triple-Lok® tube connections.
Manual flaring tools range from simple impact flarers to handpump-operated workshop devices. Flaring result and fitting performance depends strongly on the skill and effort of operator. Hand flaring tools are not recommended for efficient industrial production.

Features, advantages and benefits of hand flaring tools

1. **Flexible –** Manual flaring tools are portable and do not need any power supply. Therefore they are ideal for on-site assembly and field repair.
2. **Special –** Each device has been especially developed to match Parker Triple-Lok® standards. The tube connections will fit properly without rework.

How to select the ideal flaring device for your application:

	Hand flaring tools 1004/210A	Impact flaring tool	KARRYFLARE	Parflare ECO
	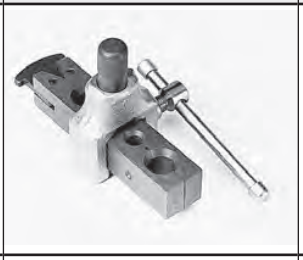			
Assembly method				
Triple-Lok®	impact flaring	impact flaring	conventional flaring	conventional flaring
O-Lok®	not suitable	not suitable	not suitable	not suitable
Tube specification				
Material	copper, steel	copper, steel, stainless steel	steel, stainless steel	steel, stainless steel
Dimension metric tube	6 to 16 mm (1004)	6 to 38/42 mm	6 to 38/42 mm	6 to 38/42 mm
Dimension inch tube	1/8″ to 5/8″ (210A)	1/4″ to 1 1/2″	1/4″ to 1 1/2″	1/4″ to 1 1/2″
Min. U-bend	depending on vice	depending on vice	65 mm	70 mm
Tools				
Clamping dies	one device	vice block	Flaring die M15 … (same dies used EOMAT)	Flaring die M15 … (same dies used EOMAT)
Flaring pin	integral part of device	pin plus hammer	integral part of device	integral part of device
Operation				
Flaring	hammer impact	hammer impact	handpump	electro-hydraulic
Process control	manual	manual	pressure according to chart	pressure according to chart
Tube clamping	manual clamping	manual	automatic clamping	automatic clamping
Specifications				
Design	flaring device for use in vice	Hand tools for use in vice	portable desktop	portable desktop
Weight	approx. 1.5 kg	–	approx. 29 kg	approx. 30 kg
Dimension (W×L×H)	–	–	750×360×260 mm	750×360×300 mm
Performance				
Overall cycle time	approx. 1–3 min	approx. 1–3 min	approx. 30–60 sec.	approx. 15–20 sec.
Economic production quantity:	10 flarings per week	10 flarings per week	max. 50 flarings per day	max. 100 flarings per day
Quality	dependant on operator	dependant on operator	controlled process	controlled process
Application	on-site repair jobs only; Limited to small dimensions. Limited to single assemblies, not for industrial production, emergency repairs until industrial flared tube is available for replacement.		Efficient for on-site flaring of small quantities not for mass production	portable machine for repair and workshop

Manual flaring tools for Triple-Lok® tubes

These 37° flaring tools are for use with copper, aluminum alloy, and thin wall steel or stainless steel tubes. A vice block is clamped together with the tube end into a vicener. Flaring pin is used with a hammer. Separate tooling sets for each tube size in metric and inch dimensions are available.

These hand tools are suitable for small on-site repair jobs. They are not suitable for thick-wall tubing and industrial production. A rigid vice must be available at the assembly site.

Features, advantages and benefits

1. **Light** – Hand flaring tools can be used at any assembly site where a proper workshop is not available
2. **Quick** – Hand flaring tools can be used for temporary repair until a proper spare tube has been made by machine

Applications

- Field repair of agricultural and construction vehicles
- Small, local repair workshops
- Mobile repair service

Combination impact flarer 1004 for small dimension metric tube

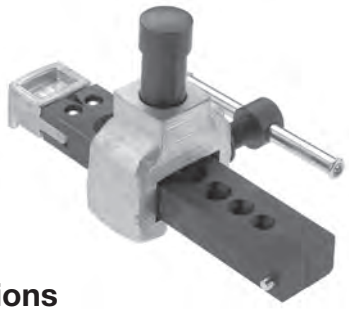

Specifications

Design: **Hand flaring tool for small on-site repair jobs**
Operation: **Flaring pin Impact**
37° Flaring: Triple-Lok® connection – ISO 8434-2/ SAE J514
Tube material: copper, aluminum and low carbon steel
Tube diameter: 6 to 16 mm metric tube
Wall thickness: max 15% of tube O.D.
Requirements: Rigid vice and hammer
Performance: Overall cycle time 1–3 min
Economic production quantity: 10 flarings per week

Operation

1. Clamp tube end flush in block halves
2. Clean and lubricate tube end and flaring pin
3. Form the flare by a few sharp hammer blows
4. Release vice and unclamp tube

See chapter E for detailed instructions on Triple-Lok® assembly

Ordering

Type	Order code
Combination impact flarer Complete device including Combination dies and pin	1004-74M
EO-NIROMONT Liquid lubricant in a brush-in-cap can (250 cc)	EONIROMONTAPPLICATOR

Combination impact flarer 210A for small dimension inch tube

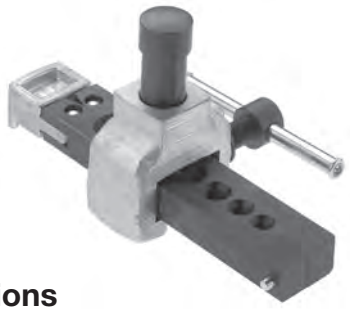

Specifications

Design: **Hand flaring tools for small on-site repair jobs**
Operation: **Flaring pin Impact**
37° Flaring: Triple-Lok® connection – ISO 8434-2/ SAE J514
Tube material: copper, aluminum and low carbon steel
Tube diameter: 1/8″ to 5/8″ inch
Wall thickness: max 15 % of tube-O.D.
Requirements: Rigid vice and hammer
Performance: Overall cycle time 1–3 min
Economic production quantity: 10 flarings per week

Operation

1. Clamp tube end flush in block halves
2. Clean and lubricate tube end and flaring pin
3. Form the flare by a few sharp hammer blows
4. Release vice and unclamp tube

See chapter E for detailed instructions on Triple-Lok® assembly

Ordering

Type	Order code
Combination impact flarer Complete device including Combination dies and pin	210A
EO-NIROMONT Liquid lubricant in a brush-in-cap can (250 cc)	EONIROMONTAPPLICATOR

Impact flaring tools for metric and inch tube

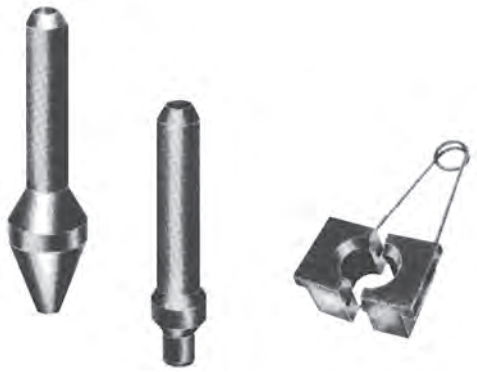

Specifications

Design: **Hand flaring tools for small on-site repair jobs**
Operation: **Impact flaring pin**
37° Flaring: Triple-Lok® connection – ISO 8434-2/ SAE J514
Tube material: copper, aluminum, steel and stainless steel tube
Tube diameter: 6 to 38 mm/1/4″ to 1 1/2″
Wall thickness: max 15% of tube-O.D., max 10% of tube O.D. for tubes larger 20 mm tube O.D.
Requirements: Rigid vice and hammer
Performance: Overall cycle time 1–3 min
Economic production quantity: 10 flarings per week

Operation

1. Clamp tube end flush in block halves
2. Clean and lubricate tube end and flaring pin
3. Form the flare by a few sharp hammer blows
4. Use pre-flaring pin for tube O.D. 20 mm/3/4″ and larger
5. Release vice and unclamp tube

See chapter E for detailed instructions on Triple-Lok® assembly

Tools for metric tube			
Tube-O.D. mm	Pre-flaring pin Order code	Flaring Order code	Vice block Order code
06		P17408	M27406
08		P17408	M05742
10		P17408	M27410
12		P17414	M27412
14		P17414	M27414
15		P17414	M27415
16		P17414	M27416
18		P17418	M27418
20	P1E	P17418	M27420
22	P1E	P17422	M14742
25	P1E	P17422	M27425
30	P1E	P17432	M27430
32	P1E	P17432	M27432
38	P1E	P17438	M24742

Tools for inch tube			
Tube-O.D. inch	Pre-flaring pin Order code	Flaring Order code	Vice block Order code
1/4″		P17408	M04742
5/16″		P17408	M05742
3/8″		P17408	M06742
1/2″		P17414	M08742
5/8″		P17414	M10742
3/4″	P1E	P17418	M12742
7/8″	P1E	P17422	M14742
1″	P1E	P17422	M16742
	P1E		
1 1/4″	P1E	P17432	M20742
1 1/2″	P1E	P17438	M24742

Type	Order code
Tool lubricant 0.25L bottle	EONIROMONTFLUESSX

KARRYFLARE Portable flaring device for Triple-Lok®

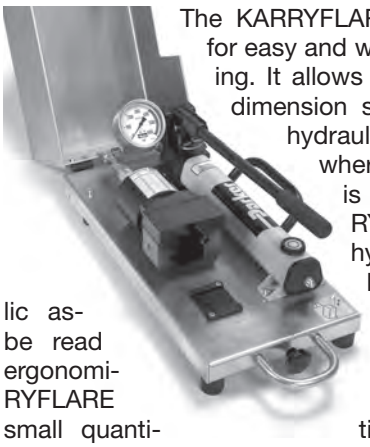

The KARRYFLARE is a portable device for easy and workmanlike 37° tube flaring. It allows the flaring of even large dimension steel and stainless steel hydraulic tube at assembly sites where Parflange® technology is not available. The KARRYFLARE consists of a hydraulic flaring unit and a hand pump. The hydraulic assembly pressure can be read on a gauge which is ergonomically located. The KARRYFLARE is ideal for tube flaring of small quantities and on-site tube installation.
It is practical, simple to operate, reliable and easy to transport. The KARRYFLARE comes as one unit with all components firmly attached to a practical carrying frame.

Technical data

Application: 37° flaring of hydraulic tube
Flare dimensions and geometry according to ISO 8434 / SAE J514
For Parker Triple-Lok® hydraulic fittings
Tube outer diameter: 6 to 38 mm / ¼ to 1 ½″
Maximum capacity: 38 × 4 mm / 1 ½ × 0.120″
With special flaring pin up to 42 mm tube O.D.
Tube material: steel and stainless steel
Minimum width U-bend: 70 mm
Weight: approx. 29 kg
Dimensions: approx. L 750 mm × W 360 mm × H 260 mm
Hydraulic oil: H-LP32-1.2 liter

Ordering

KARRYFLARE device and accessories

Description	Order code
KARRYFLARE Manual flaring device KarryFlare including handpump, carrying case and manual tank filled with hydraulic oil, 37° flaring pin installed. Flaring dies "M15" must be ordered separately.	KARRYFLARE
Accessoires	
Tool lubricant 0.25L bottle	EONIROMONTFLUESSX
EO-NIROMONT Liquid lubricant in a brush-in-cap can (250 cc)	EONIROMONTAPPLICATOR
Promotion leaflet	LEAF/4049-D1/UK/DE
Spare parts	
Flaring bloc, complete	KARRYFLARE/BLOC
Standard Flaring pin 6–38 mm, with O-ring	KARRYFLARE/FPIN
Special Flaring pin 42 mm, with O-ring	KARRYFLARE/FPIN42
Tube stop with guide	KARRYFLARE/TSTOPKPL
Pressure chart sticker	KARRYFLARE/CHART

Performance

Cycle time: 30–60 sec.
Economic production quantity: max 50 flarings per day

Features, advantages and benefits

1. Flexible on-site tube flaring
2. Simple operation
3. KARRYFLARE is portable and does not require any power supply
4. Flaring quality is comparable to EOMAT
5. Saves time and effort compared to manual impact flaring
6. Safe and consistent result
7. All elements are ergonomically located
8. Robust, light metal transport box
9. Telescopic handle and wheels for convenient trolley transport
10. Uses "M15" flaring dies (EOMAT/1015)

Applications

- Assembly of 37° flare fittings in small quantities
- On-site repair of agricultural vehicles and mobile construction equipment
- Repair workshops and plant maintenance
- Mobile repair service

KARRYFLARE		
 Tube-O.D. Ø [mm]	– Ø [Inch]	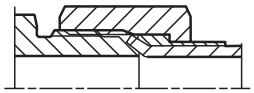 Triple-Lok®, P [bar]
6	1/4	35
8	5/16	45
10	3/8	60
12	1/2	60
14		80
15		100
16	5/8	100
18		120
20	3/4	160
22		160
25	1	180
28		215
30	1 1/4	230
35		270
38	1 1/2	280
42		320

Novaz.cz

Parflare ECO

Mobile flaring machine for Triple-Lok® hydraulic fittings

Technical Data	
Application:	Flaring tubes for Parker Triple-Lok® hydraulic connectors
Procedure:	Axial forming with flaring pin
Flaring:	37° to DIN EN ISO 8434-2
Tube material:	Steel and stainless steel tubing
Tube diameter:	6 to 42 mm / ¼″ to 1 ½″
Minimum width U-bend:	70 mm
Speed:	15 to 20 sec. cycle time/approx. 20 to 30 sec. total cycle time
Economical production quantity:	max. 100 assemblies per day
Dimensions (L×W×H):	750×300×360 mm
Weight:	30 kg
Continuous operating	50 %
Electrical power rating:	EU Version: 230 V single phase 50 Hz 700 W US Version: 110 V single phase 60 Hz 700 W

Type	Order code
Parflare ECO basic machine, ready to operate, including operator's handbook, KARRYFLARE/ FPIN installed, "M15" flaring dies must be ordered seperately	EU Version: PARFLAREECO230V US Version: PARFLAREECO110V
Brochure	BUL/4048/DE via Parker catalogue Service EMDC
Operator's handbook UK/DE/FR/IT/ES	PARFLAREECO/MANUAL
Standard preventive maintenance	PARFLAREECO/INSP
Pressure chart sticker	PARFLAREECO/CHART
Standard flaring pin 6–38 mm, with O-ring	KARRYFLARE/FPIN
Special flaring pin 42 mm, with O-ring	KARRYFLARE/FPIN42

Parflare ECO
Economical – Simple – Safe

A full fledged Triple-Lok® fitting flaring machine at an economical price. The Parflare ECO is a mobile machine that flares tubes to 37° for Parker Triple-Lok® hydraulic fittings. This electro-hydraulic machine is simple to operate, with the flaring pressure being set via a digital display. The machine is simple to use, rugged and easy to transport. Because of these features, the Parflare ECO is the ideal machine for hydraulic service technicians.

Application areas:
For the repair and maintenance of hydraulic tubing systems in both workshop and field operations.

Advantages for the service technician:
- professional flaring
- energy and time savings due to the electric drive
- simple operation
- portable and light
- rugged and mobile

Purchasing advantages:
- inexpensive
- economical mode of operation
- existing tooling can be used
- unbeatable price-to-performance ratio

The machine is perfectly suited to regular use, but not to high volume production.

Operation:
For detailed assembly instructions, see our fittings technology handbook, chapter E. For safety information, see machine operating manual.
1. Insert die valves and close cover
2. Set the recommended flaring pressure in accordance with the chart on the display
3. Insert tube with retaining nut and sleeve
4. Push START button and keep depressed
5. Keep a firm hold of the tube throughout the complete flaring procedure
6. The flaring procedure is finished when the cylinder has returned back to its start position
7. Flaring inspection and final assembly should be in accordance with the assembly handbook

Tool lifetime
Assembly tools are subject to wear and must be regularly (max. 50 assemblies) cleaned and checked (Checking instructions see chapter E). Worn out tools can cause dangerours assembly failures and must be replaced in time. Maximum lifetime can be achieved by following factors:
- Regular cleaning and checking
- Clean and corrosion-protected storage
- Proper de-burring and cleaning of tube end
- Proper tool selection and operation
- Use of specified lubricant

KOVACV

Parflare ECO mobile flaring machine for Triple-Lok® hydraulic fittings

Pressure chart

Parflare ECO

Tube-O.D. 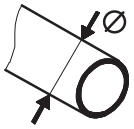	Tube-O.D. 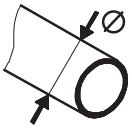	Triple-Lok® 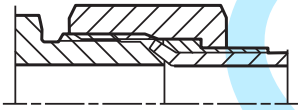
Ø (mm)	Ø (inch)	P (bar)
6	1/4	20
8	5/16	25
10	3/8	35
12	1/2	35
14		45
15		60
16	5/8	60
18	3/4	70
20		95
22	1	95
25	1 1/4	110
28		130
30	1 1/2	140
35		165
38		180
42		200

kovaz.cz

37° flaring tools for KARRYFLARE device and PARFLARE ECO, EOMAT UNI, II and III

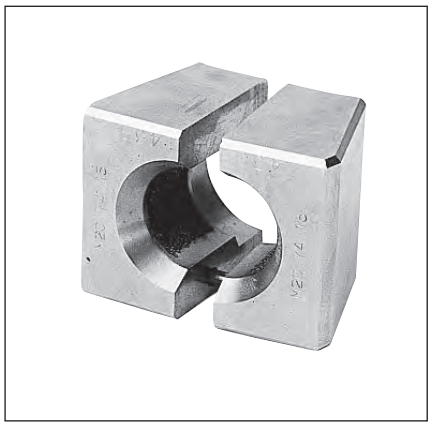

Flaring die set M1574

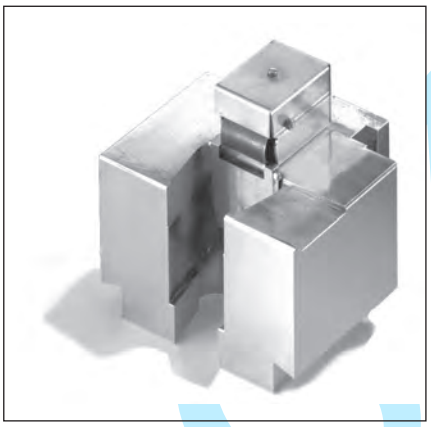

Flaring fixture must be installed on EOMAT UNI II/III

Flaring dies for metric tube	
Tube O.D. mm	Order code
6	M157406-1
8	M157408-1
10	M157410-1
12	M157412
14	M157414
15	M157415
16	M157416
18	M157418
20	M157420
22	M157422
25	M157425
28	M157428
30	M157430
32	M157432
35	M157435
38	M157438
38x6	
42	M157442

Flaring dies for inch tube	
Tube O.D. inch	Order code
3/16″	M037415-1
1/4″	M047415-1
5/16″	M157408-1
3/8″	M067415-1
1/2″	M087415
5/8″	M107415
3/4″	M127415
7/8″	M147415
1″	M167415
1 1/4″	M207415
1 1/2″	M157438

Flaring diameters acc. to ISO 8434-2/SAE J514 for Triple-Lok®. Not suitable for metric flare adapters.
The flaring pin for the KARRYFLARE and Parflare ECO is integrated in the device. For the EOMAT UNI the flaring pins are in the EOMAT flaring fixture (EOMATBOERDELBX).
Flaring dies are **not** interchangeable with Parflange® tools for 1025/1040/50-machines.

Tool lifetime
Assembly tools are subject of wear and must be regularely (max. 50 assemblies) cleaned and checked (Checking instructions see chapter E). Worn out tools can cause dangerous assembly failures and must be replaced in time. A Maximum lifetime can be achieved by following factors:

- Regular cleaning and checking
- Clean and corrosion-protected storage
- Proper de-burring and cleaning of tube end
- Proper tool selection and operation
- Use of specified lubricant

Assembly machines for O-Lok® and Triple-Lok®

Parflange® machine selection guide

Parflange® 1025 and Parflange® 50 are orbital flaring machines designed to cold-form high pressure tube connections. The unique feature of the Parflange® process is that the deformation of the tube end is achieved by rolling rather than by just pushing a tool into the tube end. The Parflange® machine smoothly compresses the tube material and achieves a high strength joint with a polished surface of the tube end. O-Lok® sleeves are firmly fixed onto the tube end, resulting in a very rigid high-pressure tube connection.

Features, advantages and benefits

1. **Superior sealing performance –** The Parflange® process achieves a sealing surface of unique surface quality and mechanical strength.
2. **Superior vibration resistance –** Unlike conventional flaring, the Parflange® process results in a rigid connection of the O-Lok® sleeve on the tube-end. Parflange®/O-Lok® connections perform much better under reversed bending stress conditions.
3. **Easy to use** – No programming or adjustments necessary. High quality results are consistently achieved without manual adjustments.
4. **Cost saving** – Compared to brazing or welding, orbital flanging is much less time consuming. Special tube preparation and finishing are not necessary. Flanging uses only a fraction of the energy needed for brazing or welding.
5. **Clean** – The Parflange® process is environmental clean and safe. As no heat or chemicals are used, hazards from fumes or heat do not occur.
6. **Zinc plated tubing.** The Parflange® process allows the use of zinc-plated tubing. The cost for cleaning, post process plating or painting is saved.
7. **Process/Product concept** – Parflange® machines are especially designed to match Parker O-Lok® and Triple-Lok® standards. Machine, tools and products are fine-tuned for reliable performance.
8. **Proven technology** – For more than 10 years, hundreds of Parflange® machines have operated worldwide under heavy duty workshop conditions.

How to select the ideal Parflange® Machine for your application:

Machine selection chart	**Parflange® 1025**		**Parflange® 50**	
Assembly method Triple-Lok® O-Lok®	 Orbital flaring 37° Orbital flanging 90°		 Orbital flaring 37° Orbital flanging 90°	
Tube specification Material Dimension metric tube Dimension inch tube Min. U-bend	 Steel, Stainless Steel 6 to 25x4 mm (Steel)/25x2,5 mm Stainless Steel O-Lok®[1]) 1/4″ to 1″x0.120 (Steel)/1″x0.095 Stainless Steel O-Lok®[1]) 6 mm to 42 mm / 1/4” to 2” Triple-Lok® 140 mm		 Steel, Stainless Steel 6 to 50 mm 1/4″ to 2″ 120 mm	
Tools Clamping dies Flaring/flanging pin	special Parflange® tools M40 … (old: M30 …) B30 …		special Parflange® tools M40 … B30 …	
Operation Setting Standard sleeve feeding Optional sleeve feeding Tube clamping Flanging/Flaring Process control	 automatic adjustment manual loading not available manual clamping automatic drive semi automatic		 automatic adjustment manual loading (BASIC) O-Lok® sleeve feeder (PRO) hydraulic clamping automatic drive fully automatic	
Specifications Design Weight Dimension (L×W×H)	 desktop approx. 85 kg 670×390×460 mm		**BASIC** stand-alone approx. 380 kg 840×700×1035 mm	**PRO** stand-alone approx. 410 kg 840×700×2030 mm
Performance Version Voltage Overall cycle time Continuous operating Economic production quantity	1.5 kW 400 V 3 Phase approx. 50 secs. 80 % max. 100 per day	1.1 kW 230 V 1 Phase approx. 60 secs. 80 % max. 50 per day	4.5 kW 400 V 3 Phase approx. 15 secs. 100 % max. 500 per day	4.5 kW 400 V 3 Phase approx. 15 secs. 100 % max. 1200 per day
Application	Ideal for projects and workshop use and maintenance High quality result No mass production	on-site repair jobs where 3phase power supply is not available	Efficient production machine for low-cost and high-quality assembly	Efficient mass production machine for low-cost and high-quality assembly

[1]) Other sizes on request.

Parflange® 1025 workshop machine for O-Lok® and Triple-Lok®

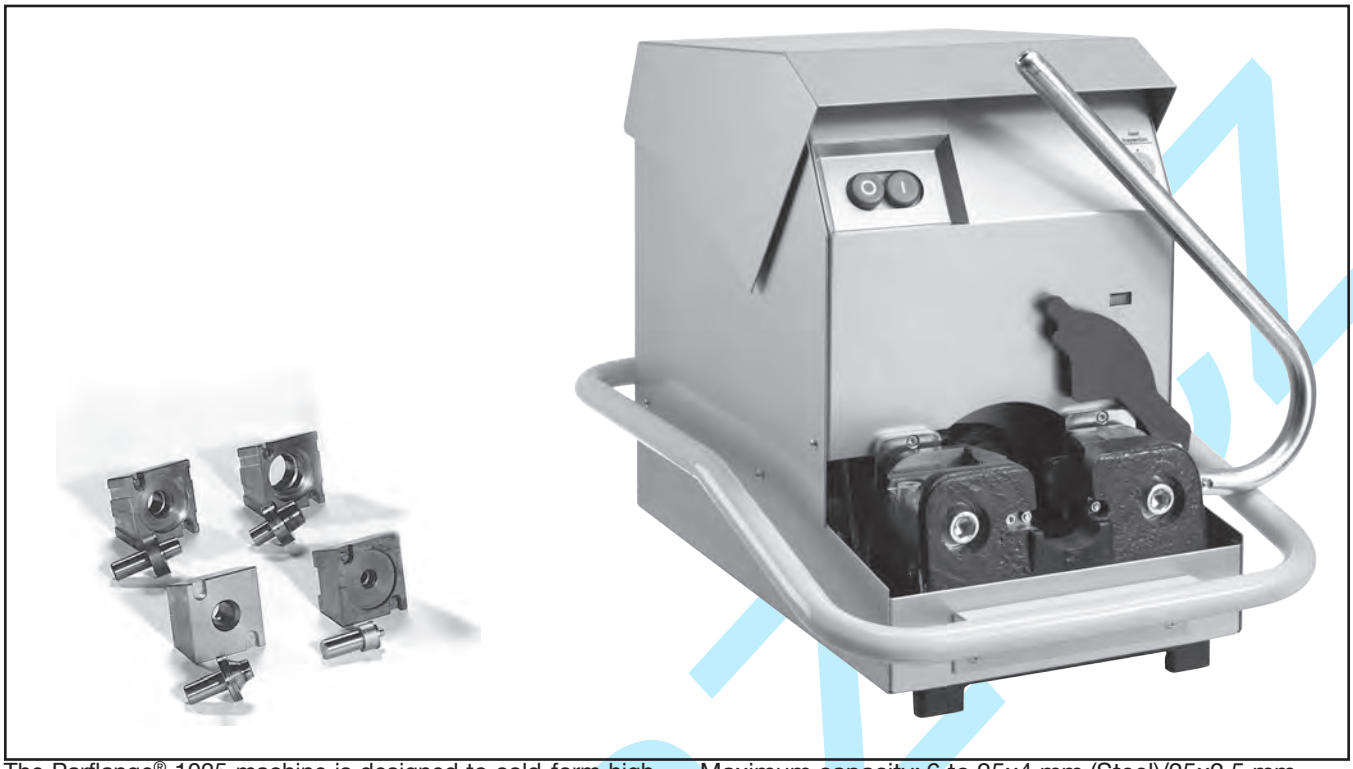

The Parflange® 1025 machine is designed to cold-form high pressure tube connections for O-Lok® and Triple-Lok® connection. It uses the Parflange® orbital flaring process. The Parflange® 1025 machine smoothly compresses the tube material and achieves a high strength joint with a polished surface of the tube end. O-Lok® and SAE flange sleeves are firmly fixed onto the tube end, resulting in a very rigid high-pressure tube connection.

The 1025 is the smallest machine of the Parflange® machine programme. It is recommended for low-volume assembly jobs of small to medium tube dimensions. Maximum tube capacity is 25 × 4 mm/1″ (steel tube) and 25 × 2.5 mm/1″ Parker tube 1.4571 (tube made from other material has to be checked). Its advantage is the quick and easy change of tooling and the simple operation without manual adjustments or programming. The machine is transportable so that it can be moved to any assembly site with electrical power supply.

The Parflange® 1025 comes ready to be used. Parflange® tools are purchased separately. For each tube dimension, special clamping dies and Parflange® pins are required.

Specifications

Purpose:	180° flanging for O-Lok® and 37° flaring for Triple-Lok®
Process:	Orbital flaring and flanging according to Parflange® process
Design:	Desktop machine for workshop use
Tube material:	steel and stainless steel tube
Tube diameter:	metric: 6 to 25 mm Inch: ¼ to 1″
Maximum capacity:	6 to 25x4 mm (Steel)/25x2,5 mm Stainless Steel O-Lok®[1]) 1/4″ to 1″x0.120 (Steel)/1″x0.095 Stainless Steel O-Lok®[1]) 6 mm to 42 mm / 1/4” to 2” Triple-Lok®
Min. U-bend:	140 mm
Tube specification:	fully annealed seamless cold drawn or welded precision tube
Performance:	
Overall cycle time	1.5 kW: 50 sec; 1.1 kW: 60 sec
Economic production quantity	1.5 kW: max. 100; 1.1 kW: max. 50
Operation:	Manual clamping, automatic flanging/flaring
Continuous operating:	80 %
Cycle time:	approx. 15 to 20 secs.
Tools:	Flaring pin B30 or B40 … and clamping dies M40 …
Tool clamping:	Manual, by eccentric lever
Tool lubrication:	Automatic lubrication device
Lubricant:	EO-NIROMONT LUBSS (filled when delivered)
Hydraulic oil:	HLP 23 0.5L (filled when delivered)
Installation:	rigid workbench and electrical power supply required
Dimensions:	670×390×460 mm
Weight:	85 kg

[1]) Other sizes on request.

Features, advantages and benefits

1. **Superior sealing performance –** The Parflange® process achieves a sealing surface of unique surface quality and mechanical strength.
2. **Superior vibration resistance –** Unlike conventional flaring, the Parflange® process results in a rigid connection of the O-Lok® sleeve on the tube-end. Parflange®/ O-Lok® connections perform much better under reversed bending stress conditions.
3. **Easy to use** – No programming or adjustments necessary. High quality results are consistently achieved without manual adjustments.
4. **Quality –** Machine setting, tool control and even lubrication are fully automated so that high and consistent quality results are achieved without manual adjustments.
5. **Small bending radii** – The compact clamping device and special dies are suitable for flanging short tube ends.
6. **Cost saving** – Compared to brazing or welding, orbital flanging is much less time consuming. Special tube preparation and finishing are not necessary. Flanging uses only a fraction of the energy needed for brazing or welding.
7. **Clean** – The Parflange® process is environmental clean and safe. As no heat or chemicals are used, hazards from fumes or heat do not occur.
8. **Zinc plated tubing** – The Parflange® process allows the use of zinc-plated tubing. The cost for cleaning or painting can be saved.
9. **High tool lifetime** – The Parflange® 1025 machine is equipped with an automatic lubrication device. The tools will not wear rapidely if the operator does not lubricate regularly.
10. **Process/Product concept** – Parflange® machines are especially designed to match Parker O-Lok® and Triple-Lok® standards. Machine, tools and products are fine-tuned for reliable performance.
11. **Proven technology** – Since more than 10 years, hundreds of Parflange® machines have operated worldwide under heavy duty workshop conditions.

Applications

Workshop use, project work, plant maintenance, on-site assembly.
Not for efficient mass production

Ordering

Type	Order code
Parflange® 1025 Basic machine Ready to use, Including operating manual, Filled with hydraulic oil and lubricant Without Parflange® tools	
Basic machine 400 V, 3 Phase, 50 Hz	1025-380VTRI50
Basic machine 230 V, 1 Phase, 50 Hz	1025-220VMONO50
Rental (monthly usage)	1025RENTFEE
1025 promotion leaflet UK	4390/UK
1025 promotion leaflet DE	4390/DE
1025 operating manual UK/DE/FR/IT	4390-B5
Standard preventive maintenance	1025/INSPECTION

Parflange® machines are shipped in a special container which should be kept for all transports to avoid damage.

Spare parts

Type	Order code
Tool lubricant qty: 1L EO-NIROMONT	LUBSS
Drive belt	1025/028Polyv
Came guide and with screw	1025/0281031
Hydraulic tank seal kit	1025/0281042
Lubrication kit	1025/0281200
Retrofit Kit: Oilsump for the Parflange 1025 to catch rest lubricant	1025/OILSUMP

Kovax.cz

Parflange® 50 WorkCenter

Bins can be stored on top platforms

Easy refill of tool lubricant

The Parflange® 50 WorkCenter is the top-of-the-range machine for orbital flaring & flanging of O-Lok® and Triple-Lok® tube assemblies. It combines the practical EO2-FORM F3 WorkCenter concept with the proven Parflange® technology.
Due to the robust design and the precise process control, the Parflange® 50 WorkCenter achieves consistent high quality results and high productivity. Machine housing, cycle programming and all operating elements are designed for good ergonomics, optimum workflow and highest security. The compact Parflange unit and the compact housing allow the forming of small and complex tube bends. Maximum tool lifetime is achieved by the automatic lubrication system as well as easy visibility and accessability of the tooling area. The integrated tool compartments and designated space for bins for nuts and sleeves make it comfortable and efficient to work with the Parflange® 50.

Parflange® advantages over brazing or welding

Faster and lower cost – 9 to 12 times the speed of comparable induction brazing.
Flexibility – Small batch quantities are practical due to short tool change times.
Simple tube preparation – The Parflange® process does not require any special pre- or post-flange cleaning of the tube and sleeve.
Safety – Unlike brazing, the Parflange® process does not require any flux, braze alloy, post braze cleaner or rust inhibitor. An environmentally safe lubricant applied to the flanging pin is the only additive associated with the Parflange®.
Environment – The Parflange® process is environmentally clean and safe. It does not require open flame or any form of heating. Additionally, there is no emission of hazardous fumes, as is typical with welding and brazing.
Energy – The Parflange® process uses only a fraction of the energy needed for welding or brazing.
Corrosion resistance – The Parflange® process accommodates the use of plated or unplated components (i.e. tube and sleeve). Thus, the high costs of electro-plating assemblies after fabrication is eliminated by using pre-plated tube.
Excellent surface quality – The Parflange® process eliminates the potential leak path present at the braze or weld joint.

Features and benefits

1. **Cost saving** – Compared to welding or brazing, orbital flanging is much less time consuming. Special tube preparation and finishing are not necessary. Flanging uses only a fraction of the energy needed for brazing or welding.
2. **Zinc plated tubing** – The Parflange® process allows the use of zinc-plated tubing. The cost for cleaning post process plating, or painting can be saved.
3. **High tool lifetime** – The Parflange® 50 machine is equipped with an automatic lubrication device. The operator does not have to lubricate the tools ensure long pin life.
4. **Use of existing tools** – All existing Parflange® tools (M40 dies and B30/B40 pins) fit into the new machine generation.
5. **WorkCenter concept** – When the doors are opened, the machine body turns into a WorkCenter for production of O-Lok® and Triple-Lok® tube assemblies. All tools are available for rapid and convenient machine setup and tool change.
6. **Low-cost mass production** – The machine can be ordered with an automated sleeve feeder. The Parflange® 50 then is the perfect solution for low-cost mass production.
7. **Universal** – The Parflange® 50 can do 37° flaring for Triple-Lok® connectors and flange tubes for O-Lok® fittings (ORFS). Parflange® tools cover metric tube from 6 to 50 mm O.D. and inch tube from 1/4 to 2″ O.D.
8. **Flange Seal** – The Parflange® 50 is also capable for the innovative Flange Seal connection, which contributes to reduce component cost and assembly time.
9. **Heavy duty** – The rigid machine design allows use for mass production of even large stainless steel tube connections.
10. **Process/Product concept** – Parflange® machines are especially designed to match O-Lok®, Triple-Lok® and SAE-flange standards. Machine, tools and products are fine-tuned for reliable performance.
11. **Superior sealing performance** – The Parflange® process achieves a sealing surface of unique surface quality and mechanical strength.
12. **Superior vibration resistance –** Unlike conventional flaring, the Parflange® process results in a rigid connection of the O-Lok® sleeve on the tube-end. Parflange®/O-Lok® connections perform much better under reversed bending stress conditions.
13. **Efficient** – The short cycle time and the automatic process allow efficient mass production.
14. **Quality** – Tube clamping, tool control and even lubrication is fully automated so that high and consistent quality results are achieved without manual adjustments.
15. **Easy to use** – The clamping and flanging process is fully automated. Manual tool manipulation is not required. The process is initiated by pushing the tube end into the tooling.
16. **Bin holder** – The top surface is designed to store two standard bins for fitting nuts and Parflange® sleeves. Everything is easy to reach for the operator.
17. **Illuminated tooling area** – Insertion of Parflange® sleeves and condition monitoring of tools is easy.
18. **Practical lubricant refill** – The container for tool lubricant is easily accessible by a hatch on the machine side.
19. **Side drawer** – Chips, dirt and dropped components like Parflange® sleeves can be removed by a small drawer. This allows to keep the working area clear and avoid jamming of moving parts.
20. **Clean** – The Parflange® process is environmentally clean and safe. As no heat or chemicals are used, hazards from fumes or heat do not occur.
21. **Perfect for project work** – After finishing a piping project, the machine can be put aside. Tools don't get lost and dirty. For the next project, the machine just needs to be transported to the new side and unfolded into the WorkCenter. This is particularly useful for piping projects in shipyards, paper mills, offshore platforms or steel mills.
22. **Ready to go** – The Parflange® WorkCenter is delivered including all necessary details like electrical plug, operator manual, short instruction pictograms on machine housing and dimensional charts for tube preparation.
23. **New Generation** – The Parflange® 50 WorkCenter replaces the Parflange® 1040 machine, which has been successful in the market for more than 12 years.

Parflange® 50 BASIC WorkCenter

Technical description 50 BASIC WorkCenter:

The Parflange® 50 is a production WorkCenter for orbital flaring and flanging of high pressure tube connections. The unique feature of the Parflange® process is that the deformation of the tube end is achieved by rolling rather than by just pushing a tool into the tube end.

The Parflange® machine smoothly compresses the tube material and achieves a high strength joint with a polished surface of the tube end.

O-Lok® sleeves are firmly fixed onto the tube end, resulting in a robust and vibration-resistant tube connection.

The Parflange® 50 is the heavy-duty, mass production WorkCenter of the Parflange® machine programme.

It is recommended for industrial production of all sizes Triple-Lok® and O-Lok® tube connections.

Maximum tube capacity is 50 mm/2″ tube O.D.

The powerful drive and the fast, automatic process allow short cycle times for efficient production. Its advantage is the quick and easy change of tooling and the simple operation without manual adjustments or programming. Tube clamping and tool lubrication are done automatically.

The Parflange® 50 comes ready to be used. Parflange® tools have to be purchased separately. For each tube dimension, special clamping dies and Parflange® pins are required. The machine can be moved on wheels, by forklift truck and crane. For basic use, just an electrical power supply is required.

Machine specification 50 BASIC WorkCenter:

Purpose:	90° Flanging for O-Lok® and 37° Flaring for Triple-Lok®
Process:	Orbital flaring and flanging according to Parflange® process
Design:	WorkCenter for industrial production
Tube material:	Steel and stainless steel tube
Tube diameter:	Metric: 6 to 50 mm Inch: 1/4″ to 2″
Min. U-bend:	120 mm
Maximum capacity:	Steel tube (ST 37, ST 52, …) Metric: 38×5/50×3 mm (tube O.D. × wall thickness) Inch: 2″×0.120 Stainless steel tube (1.4571, 316, …) Metric: 38×4 mm Inch: 1 1/2″×0.156
Tube specification:	Fully annealed seamless cold drawn or welded and redrawn precision tube
Operation:	Automatic clamping, automatic flanging/flaring
Continuous operating:	100 %
Speed:	5–8 sec. flanging time/15–20 sec. total cycle time
Economic production quantity:	max. 500 flarings per day
Tools:	Flaring pin B30 … or B40 … Clamping dies M40 …
Tool compartments:	10 die sets, 10 pins
Tool clamping:	Automatic
Tool lubrication:	Automatic lubrication device
Lubricant:	EO-NIROMONT (filled when delivered)
Hydraulic oil:	HLP 46 (filled when delivered)
Installation:	Electrical power
Dimensions (L×W×H):	840×700×1035 mm
Platform for bins:	2 platforms, 300×500 mm, max. 5 kg each
Weight:	380 kg
Electrical power:	400 V, 3 Phase, 50 Hz, 4.5 kW
Transport options:	On wheels, by forklift truck, lifting attachments

Parflange® 50 PRO WorkCenter

Technical description 50 Pro WorkCenter:

For industrial mass production of O-Lok® connections, special machines Parflange® 50 PRO with O-Lok® sleeve feeder are available. This sleeve feeding device increases the productivity, particularly of high volume – single tube dimension jobs.

In “Feeder ON – mode”, O-Lok® sleeves just need to be inserted into feeder rails. First cycle start is initiated by manually closing the safety cover. Then, all following cycles are started by pushing the tube into the pre-clamped dies. All other machine activities, like tube clamping, flanging, tube release, insertion of O-Lok® sleeves into dies, pre-clamping of dies and the operation of safety cover run fully automatic. The operator just is handling the tubes and refilling the sleeve-feeder from times to times with O-Lok® sleeves.

In “Feeder OFF – mode”, the Parflange® 50 PRO operates like the Parflange® 50 BASIC without O-Lok® sleeve feeder. This mode is useful for maximum size flexibility and Triple-Lok® assembly. For quick changeover and safety reasons, the O-Lok® sleeve feeder is just switched OFF but not be removed from the Parflange® 50 PRO WorkCenter.

For operation of O-Lok® PRO machines, compressed air supply is required, even when sleeve feeder is not used.

Machine specification 50 PRO WorkCenter:

Specific differences of Parflange® 50 Pro versus Parflange® 50 Basic

Design:	Parflange® 50 with additional O-Lok® sleeve feeder
Normal Operation:	Same as Parflange® 50 Basic when feeder is switched off
Feeder Operation:	Work-cycle is initiated by inserting tube end Automatic clamping, automatic flanging/flaring Automatic insertion of O-Lok® sleeves into dies Automatic operation of safety cover Automatic pre-clamping of dies
Manual operation:	like Parflange® 50 Basic
Cycle time:	5–8 sec. flanging time/approx. 15 to 20 sec. total cycle time
Economic production quantity:	max. 1200 flarings per day
Tools:	Same tools as Parflange® 50 BASIC
Feeder:	Feeder is delivered in separate box and must be firmly attached to machine. Feeder can be switched ON and OFF but must not be removed.
Feeder rails:	Feeder rail kits must be ordered separately for each O-Lok® sleeve size.
Feeder setup:	Installation of matching rail kit by knurled nuts and adjustment of scale wheel according to chart
Installation:	Electrical power, for feeder type machines: compressed air supply (6 bar)
Dimensions:	700×840×2030 mm
Weight:	410 kg

Parflange® 50 Ordering

Type	Order code
Parflange® 50 Basic machine Ready to use, including operation manual, filled with hydraulic oil and lubricant Without Parflange® tools Basis machine Europe version (not prepared for O-Lok® sleeve feeder)	
Purchase: EU-Version US-Version	1050EU400VBASIC 1050US440V60HZBASIC
Leasing (2 year hire purchase)	1050BASICLEASEFEE
Rent (monthly)	1050BASICRENTFEE

Parflange® 50 BASIC

Type	Order code
Parflange® 50 Pro machine Europe version including O-Lok® sleeve feeder without feeder rails	
Purchase: EU-Version US-Version	1050EU400VPRO 1050US440V60HZPRO
Leasing (2 year hire purchase)	1050PROLEASEFEE
Rent (monthly)	not available

Parflange® 50 PRO for mass production of O-Lok® assemblies

Sleeve feeder rails for Parflange® 50 Pro	Tube O.D.	Order code
O-Lok® sleeve feeding rail	6 mm/¼″	1050/RAIL04
O-Lok® sleeve feeding rail	8, 10 mm/$^{3}/_{8}$″	1050/RAIL06
O-Lok® sleeve feeding rail	12 mm/½″	1050/RAIL08
O-Lok® sleeve feeding rail	14, 15, 16 mm/$^{5}/_{8}$″	1050/RAIL10
O-Lok® sleeve feeding rail	18, 20 mm/¾″	1050/RAIL12
O-Lok® sleeve feeding rail	22, 25 mm/1″	1050/RAIL16
O-Lok® sleeve feeding rail	28, 30, 32 mm/1¼″	1050/RAIL20
O-Lok® sleeve feeding rail	35, 38 mm/1½″	1050/RAIL24

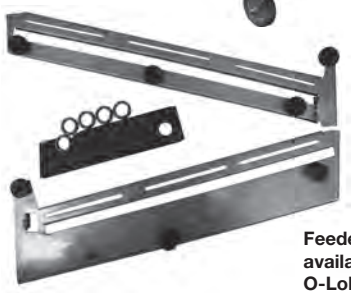

Feeder rail kits are available for each O-Lok® size

50 promotion leaflet	4391-1 via Parker catalogue service EMDC
50 operating manual UK/DE/FR/IT/ES	1050/MANUAL
Standard preventive maintenance	1050/INSPECTION

Tool lubricant refill qty: 1L EO-NIROMONT	LUBSS
Replacement cartridge for spindle lubrication	1050/22900001801

High-Performance lubricant for Parflange®

Parflange® machines and feeders are shipped in special containers which should be kept for future transports to avoid damage. Please don't dispose the transport boxes!!!

Tooling for Parflange® machines

Machine and tool selection

Parflange® 1025

Parflange® 50

Parflange® 1025 machines flanging capacity for O-Lok®

Tube material	220 V 1.1 kW	380 V 1.5 kW
	Max. tube size mm (inch)	
Steel ST37	25×4 (1″×0.120)	25×4 (1″×0.120)
Stainless steel 304L/316L*	25×2.5 (1″×0.95)	25×2.5 (1″×0.95)
Steel ST52	25×4 (1″×0.120)	25×4 (1″×0.120)

Parflange® 50 machines flanging capacity for O-Lok®

Tube material	Max. tube size mm (inch)
Steel ST37	38×5/50×3 (2×0.120)
Steel ST52	38×4 (1 1/2×0.156)
Stainless steel 304L/316L*	38×4 (1 1/2×0.156)

Parflange® 1025 machines flaring capacity for Triple-Lok®

Tube material	Elect. power of machine	
	220 V 1.1 kW	380 V 1.5 kW
	Max. tube size mm (inch)	
Steel ST37	38x4/42x3 (1 1/2x0.120)	38x4/42x3 (1 1/2x0.120)
Steel ST52	38x4/42x3 (1 1/2x0.120)	38x4/42x3 (1 1/2x0.120
Stainless steel 304L/316L*	38x4/42x3 (1 1/2x0.120)	38x4/42x3 (1 1/2x0.120)
Stainless steel Duplex (or PW 400)	38x3.6	38x3.6

Parflange® 50 machines flaring capacity for Triple-Lok®

Tube material	Elect. power of machine
	220/380 V 4.5 kW Max. tube size mm (inch)
Steel TU 37 B	38×4/42×3 (1 1/2×0.120)
Steel TU 52 B	38×4/42×3 (1 1/2×0.120)
Stainless steel 304L/316L*	38×4/42×3 (1 1/2×0.120)
Stainless steel Duplex (or PW 400)	38×3.6

* Parflange® tools for stainless steel tubes have different dimensions and are specially coated. These tools are marked with suffix “SS”.

Parflange® tool identification

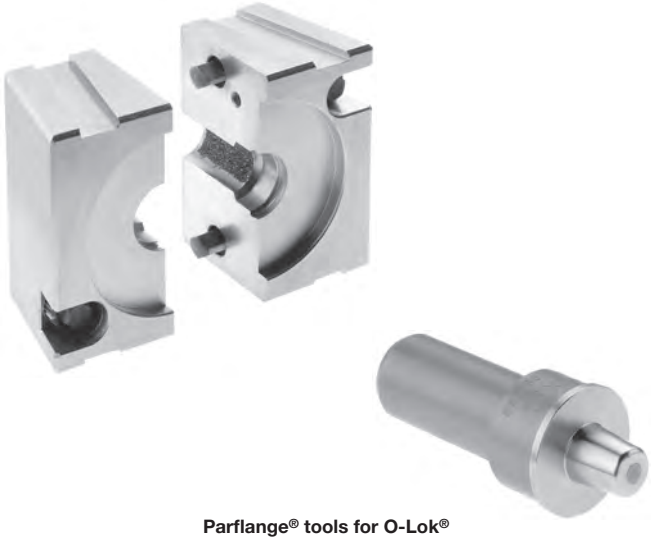

Parflange® tools for O-Lok®

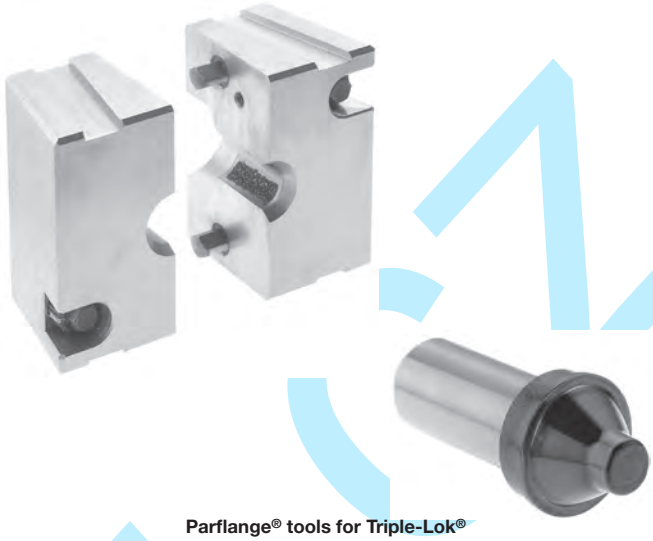

Parflange® tools for Triple-Lok®

Tooling for metric tubing

Metric die numbering system

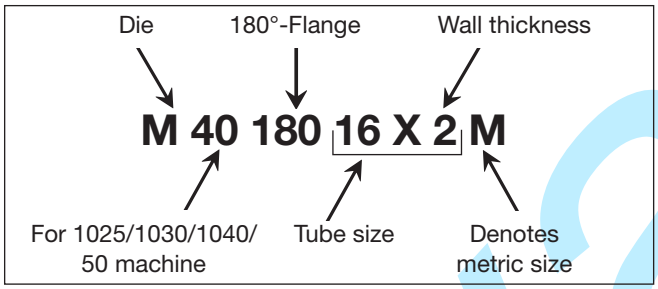

Metric pin numbering system

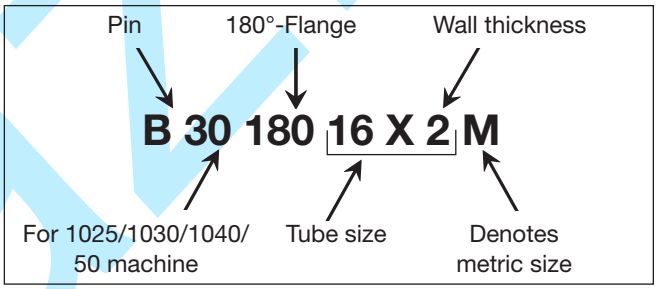

Tooling for inch tubing

Die numbering system

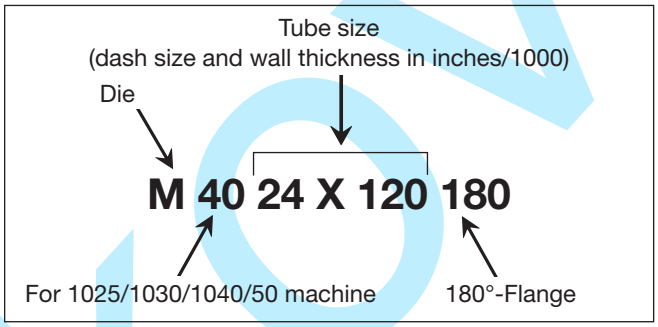

Pin numbering system

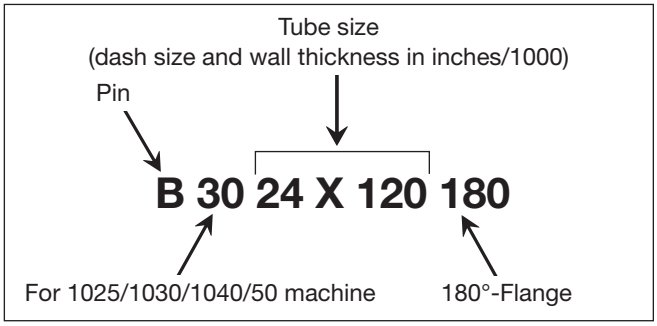

Parflange® tools for stainless steel tubes have different dimensions and are specially coated. These tools are marked with suffix “SS”.

Tool lifetime

Assembly tools are subject of wear and must be regularly (max. 50 assemblies) cleaned and checked (Checking instructions see chapter E). Worn out tools can cause dangerous assembly failures and must be replaced in time. Maximum lifetime can be achieved by following factors:

- Regular cleaning and checking
- Clean and corrosion-protected storage
- Proper de-burring and cleaning of tube end
- Proper tool selection and operation
- Use of specified lubricant

Parflange® tools for O-Lok®

Parflange® tooling – Order codes for Parflange® 50/1040/1030/1025

90°-Flange-tool-selection (Metric tube)

Tube size mm	Steel tube		Stainless steel tube	
	Flange pin Order code	Flange die Order code	Flange pin Order code	Flange die Order code
06×1.0	**B3018006X1M**	**M4018006X1M**		
06×1.5	B3018006X1.5M	M4018006X1.5M		
08×1.0	**B3018008X1M**	**M4018008X1M**	B3018008X1MSS	M4018008X1MSS
08×1.5	**B3018008X1.5M**	M4018008X1.5M	B3018008X1.5MSS	M4018008X1.5MSS
10×1.0	**B3018010X1M**	**M4018010X1M**	B3018010X1MSS	M4018010X1MSS
10×1.5	**B3018010X1.5M**	**M4018010X1.5M**	B3018010X1.5MSS	M4018010X1.5MSS
10×2.0	**B3018010X2M**	M4018010X2M		
12×1.0	**B3018012X1M**	**M4018012X1M**	B3018012X1MSS	M4018012X1MSS
12×1.5	**B3018012X1.5M**	**M4018012X1.5M**	B3018012X1.5MSS	M4018012X1.5MSS
12×2.0	**B3018012X2M**	**M4018012X2M**		
15×1.0			B3018015X1MSS	M4018015X1MSS
15×1.5	**B3018015X1.5M**	**M4018015X1.5M**		
15×2.0	B3018015X2M	M4018015X2M		
16×1.5	**B3018016X1.5M**	**M4018016X1.5M**	B3018016X1.5MSS	M4018016X1.5MSS
16×2.0	**B3018016X2M**	**M4018016X2M**	B3018016X2MSS	M4018016X2MSS
16×2.5	B3018016X2.5M	M4018016X2.5M		
18×1.5	**B3018018X1.5M**	**M4018018X1.5M**		
18×2.0	**B3018018X2M**	**M4018018X2M**		
20×2.0	**B3018020X2M**	**M4018020X2M**	B3018020X2MSS	M4018020X2MSS
20×2.5	**B3018020X2.5M**	**M4018020X2.5M**		
20×3.0	B3018020X3M	M4018020X3M		
22×2.0	B3018022X2M	M4018022X2M		
22×2.5	B3018022X2.5M	M4018022X2.5M		
25×2.5	**B3018025X2.5M**	**M4018025X2.5M**	B3018025X2.5MSS	M4018025X2.5MSS
25×3.0	**B3018025X3M**	**M4018025X3M**		
28×2.0	B3018028X2M	M4018028X2M		
28×2.5	B3018028X2.5M	M4018028X2.5M		
30×2.0	B3018030X2M	M4018030X2M		
30×3.0	**B3018030X3M**	**M4018030X3M**	B3018030X3MSS	M4018030X3MSS
30×4.0	**B3018030X4M**	**M4018030X4M**		
32×3.0	B3018032X3M	M4018032X3M		
32×4.0	B3018032X4M	M4018032X4M		
35×3.0	B3018035X3M	M4018035X3M		
38×3.0	**B3018038X3M**	**M4018038X3M**		
38×4.0	**B3018038X4M**	**M4018038X4M**		

Bold = Standard dimensions
Regular = Non standard dimensions

Tools for tube dimensions which are not listed must be inquired at Parker.

90°-Flange-tool-selection (Inch tube)

Tube size inch	Steel tube	
	Flange pin Order code	Flange die Order code
1/4×0.035	B3004X035180	M4004X035180
1/4×0.049	B3004X049180	M4004X049180
3/8×0.035	B3006X035180	M4006X035180
3/8×0.049	B3006X049180	M4006X049180
3/8×0.065	B3006X065180	M4006X065180
1/2×0.035	B3008X035180	M4008X035180
1/2×0.049	B3008X049180	M4008X049180
1/2×0.065	B3008X065180	M4008X065180
5/8×0.065	B3010X065180	M4010X065180
5/8×0.083	B3010X083180	M4010X083180
3/4×0.065	B3012X065180	M4012X065180
3/4×0.083	B3012X083180	M4012X083180
3/4×0.095	B3012X095180	M4012X095180
3/4×0.120	B3012X120180	M4012X120180
1×0.065	B3016X065180	M4016X065180
1×0.095	B3016X095180	M4016X095180
1 1/4×0.120	B3020X120180	M4020X120180

Further tools for Inch tubing are available from Parker TFD Columbus!

Tool lifetime
Assembly tools are subject of wear and must be regularely (max. 50 assemblies) cleaned and checked (Checking instructions see chapter E). Worn out tools can cause dangerous assembly failures and must be replaced in time. Maximum lifetime can be achieved by following factors:

- Regular cleaning and checking
- Clean and corrosion-protected storage
- Proper de-burring and cleaning of tube end
- Proper tool selection and operation
- Use of specified lubricant

Parflange® tools for Triple-Lok®

Metric tube

Tube size mm	Steel tube		Stainless steel tube	
	Flare pin Order code	Flare die Order code	Flare pin Order code	Flare die Order code
06×1.0 06×1.5	**B3007406X1M** **B3007406X1.5M**	**M4007406M** **M4007406M**	B3007406X1MSS	**M4007406M**
08×1.0 08×1.5	**B3007408X1M** **B3007408X1.5M**	**M4007408M** **M4007408M**	B3007408X1MSS B3007408X1.5MSS	**M4007408M** **M4007408M**
10×1.0 10×1.5	**B3007410X1M** **B3007410X1.5M**	**M4007410M** **M4007410M**	B3007410X1MSS B3007410X1.5MSS	**M4007410M** **M4007410M**
12×1.0 12×1.5 12×2.0	**B3007412X1M** **B3007412X1.5M** **B3007412X2M**	**M4007412M** **M4007412M** **M4007412M**	B3007412X1.5MSS	**M4007412M**
15×1.5 15×2.0	**B3007415X1.5M** B3007415X2M	**M4007415M** **M4007415M**	B3007415X1.5MSS	**M4007415M**
16×1.5 16×2.0	**B3007416X1.5M** **B3007416X2M**	**M4007416M** **M4007416M**	B3007416X2MSS	**M4007416M**
18×1.5 18×2.0	**B3007418X1.5M** B3007418X2M	**M4007418M** **M4007418M**	B3007418X1.5MSS	**M4007418M**
20×2.0 20×2.5	**B3007420X2M** **B3007420X2.5M**	**M4007420M** **M4007420M**	B3007420X2MSS B3007420X2.5MSS	**M4007420M** **M4007420M**
22×1.5 22×2.0 22×2.5	B3007422X1.5M B3007422X2M B3007422X2.5M	**M4007422M** **M4007422M** **M4007422M**	B3007422X1.5MSS	M4007422M
25×2.5 25×3.0	B3007425X2M **B3007425X3M**	**M4007425M** **M4007425M**	B3007425X2.5MSS	**M4007425M**
28×2.0 28×2.5	B3007428X2M B3007428X2.5M	M4007428M M4007428M		
30×3.0	**B3007430X3M**	**M4007430M**	B3007430X3MSS	**M4007430M**
32×3.0	B3007432X3M	**M4007432M**		
35×3.0	B3007435X3M	M4007435M		
38×3.0 38×4.0	**B3007438X3M** **B3007438X4M**	**M4007438M** **M4007438M**	B3007438X4MSS	**M4007438M**
42×3.0 42×4.0	B3007442X3M B3007442X4M	M4007442M M4007442M		

Bold = Standard dimensions
Regular = Non standard dimensions
Tools for tube dimensions which are not listed must be inquired at Parker.

Inch tube

Tube size inch	Steel tube	
	Flange pin Order code	Flange die Order code
1/4×0.049	B3004X049074	M4004074
3/8×0.049 3/8×0.065	B3006X049074 B3006X065074	M4006074 M4006074
1/2×0.065	B3008X065074	M4008074
5/8×0.065 5/8×0.095	B3010X065074 B3010X095074	M4010074 M4010074
3/4×0.095	B3012X095074	M4012074
1×0.109	B3016X109074	M4016074
1 1/4×0.120	B3020X120074	M4020074

Further tools for Inch tubing are available from Parker TFD Columbus!

Tool lifetime

Assembly tools are subject of wear and must be regularely (max. 50 assemblies) cleaned and checked (Checking instructions see chapter E). Worn out tools can cause dangerous assembly failures and must be replaced in time. Maximum lifetime can be achieved by following factors:

- Regular cleaning and checking
- Clean and corrosion-protected storage
- Proper de-burring and cleaning of tube end
- Proper tool selection and operation
- Use of specified lubricant

Lubricants

EO-NIROMONT lubricant for fitting assembly

EO-NIROMONT lubricant for flaring and forming tools

EO-NIROMONT are high performance lubricants specifically designed for the assembly of tube connections. They facilitate tightening using a low-torque when assembling joints by hand. In machine assembly, the use of EO-NIROMONT ensures that maximum tool-life is achieved. In forming processes, such as Parflange® or EO2-FORM, smooth and error-free sealing surfaces can be produced. Special additives prevent cold welding when working with stainless steel.
As opposed to when using Parker high performance lubricants, experience shows that the use of standard commercially available lubricants tend to lead to problems such as cold welding of forming tools, particularly when processing stainless steel tube. Parker high performance lubricants – EO-NIROMONT – are offered in different containers and viscosities so that you can purchase the appropriate product in a suitable container to meet your needs:

Liquid lubricant, plastic bottle (item: EONIROMONTFLUESSX)
Parker high performance lubricant for the lubrication of threads, progressive rings and for all cold forming processes like Parflange® or EO2-FORM. The handy plastic bottle means that it can be applied directly where the lubrication is needed. EO-NIROMONT liquid should always be available at every assembly point where hydraulic connections are being made.

Liquid lubricant, refill package (Item: LUBSS)
Parker high performance lubricant for all cold forming processes like Parflange® or EO2-FORM. Its viscosity means that it is for use in automatic lubrication devices installed in Parflange machines. Absolutely essential for mechanical cold forming of stainless steel tubes.

Paste lubricant, tin (Item: EONIROMONTPASTX)
Parker high performance lubricant for the lubrication of the threads of the pre-assembly tool VOMO. The paste is economical and provides durable thread lubrication. Not suited for use with forming tools, as dust and swarf will stick to it.

Liquid lubricant in a brush-in-cap can (item: EONIROMONTAPPLICATOR)
Thanks to a brush built into the screw cap, the practical EO-NIROMONT APPLICATOR enables the Parker high-performance lubricant to be applied accurately on the component. The plastic bottle can be used to refill the brush-in-cap can practically.

Features, advantages and benefits of NIROMONT lubricant:

1. **Highly effective** – EO-NIROMONT dramatically reduces assembly effort. This helps to prevent fitting failure resulting from insufficient assembly.
2. **Cost saving –** Tools in assembly machines will last much longer, resulting in high-quality tube forming with excellent sealing surface.
3. **No cold welding** – Cold welding of stainless steel threads is impossible when EO-Niromont is properly applied.
4. **Liquid** – Penetrates even small gaps.
5. **Paste** – Stays in place for a while. Ideal for application on pre-assembly tools.
6. **Compatible** – EO-NIROMONT and LUBSS do not effect fitting surfaces or seal materials.

EO-NIROMONT

EO-NIROMONT APPLICATOR

LUBSS

Ordering

Type	Order code
EO-NIROMONT Assembly lubricant paste (100 g ℮)	EONIROMONTPASTX
EO-NIROMONT Assembly lubricant liquid (250 cc)	EONIROMONTFLUESSX
EO-NIROMONT Liquid lubricant in a brush-in-cap can (250 cc)	EONIROMONTAPPLICATOR
EO-NIROMONT Forming tool lubricant refill (1 L)	LUBSS

Cutting and bending tools

AV 6/42 – Tube saw square

Provides a neat and quick method of cutting tube at right angles. The exact cut is achieved by hardened guides. We recommend using deeper-section sawblades that cut in both directions for best results. The AV 6/42 can be used in a vice or just be clamped onto the tube for cutting.

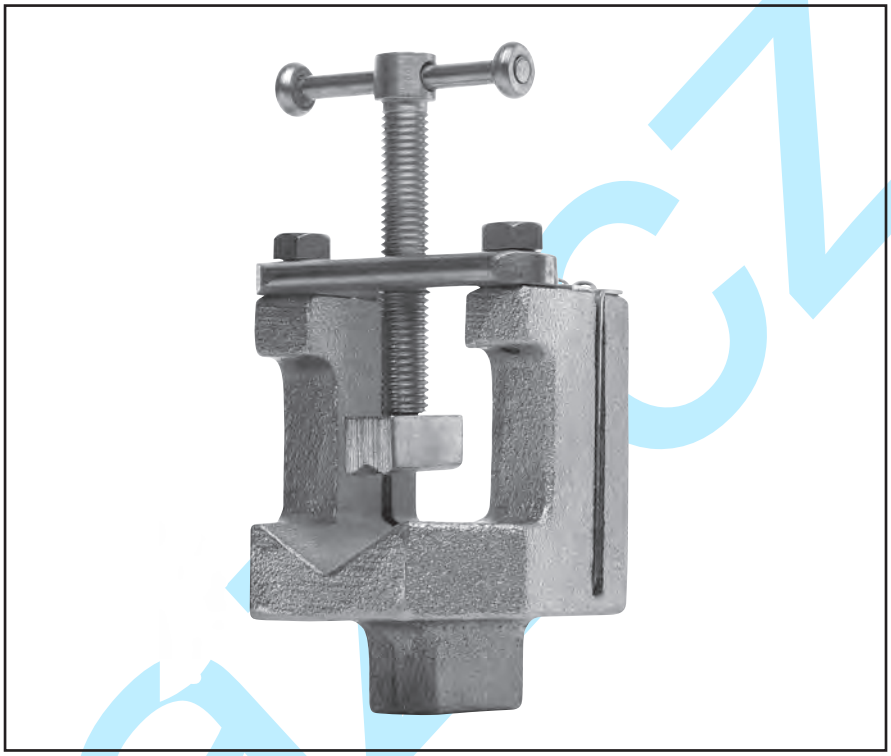

Specifications:

Tube. O.D.: 6–42 mm
Weight: approx. 0.7 kg

Type	Order code
Tube cutting tool without saw	AV06/42KPLX
Spare hardened guides	AV06/4208X

Features, advantages and benefits of tube saw square:

1. **Square cut** – Exact tube preparation greatly reduces leakage caused by assembly failures.
2. **Contour clamping** – Tube is not distorted by clamping.
3. **No vice required** – For workshop application AV 6/42 can simply be clamped onto the tube without using a vice or other attachment.
4. **Replaceable guides** – Worn out guides can easily be replaced to maintain neat cutting result.
5. **Light** – At only 0.7 kg, the AV 6/42 should be carried in the toolbox of every hydraulic tube fitter.

Kovacz

Cutting and bending tools

BAV 6/12 – Combined tube bending and cutting tool

The BAV 6/12 is a workshop device for neat tube cutting and simple but exact bending of small dimension EO-tube. Relatively small bending radii can be achieved.

The exact cut is achieved with hardened guides and using sawblades which are notched on both sides. The BAV 6/12 can be used in a vice or just be clamped onto a workbench.

Specifications:

Tube. OD: 6–12 mm
Weight: approx. 2 kg

Type	Order code
Combined tube bending and cutting tool including 3 bending rolls for 6 to 12 mm tube and bending lever	BAV06/12KPLX
Spare Parts	
Spare hardened guide	BAV06/1206X
Bending roll 6/8 mm	BAV06/1209X
Bending roll 10 mm	BAV06/1210X
Bending roll 12 mm	BAV06/1211X
Fixing roll	BAV06/1207X
Lever complete	BAV06/1220KPLX

Bending dimensions in mm			
Rolls for tube O.D.	6/8	10	12
Bending radius	19/20	25	26

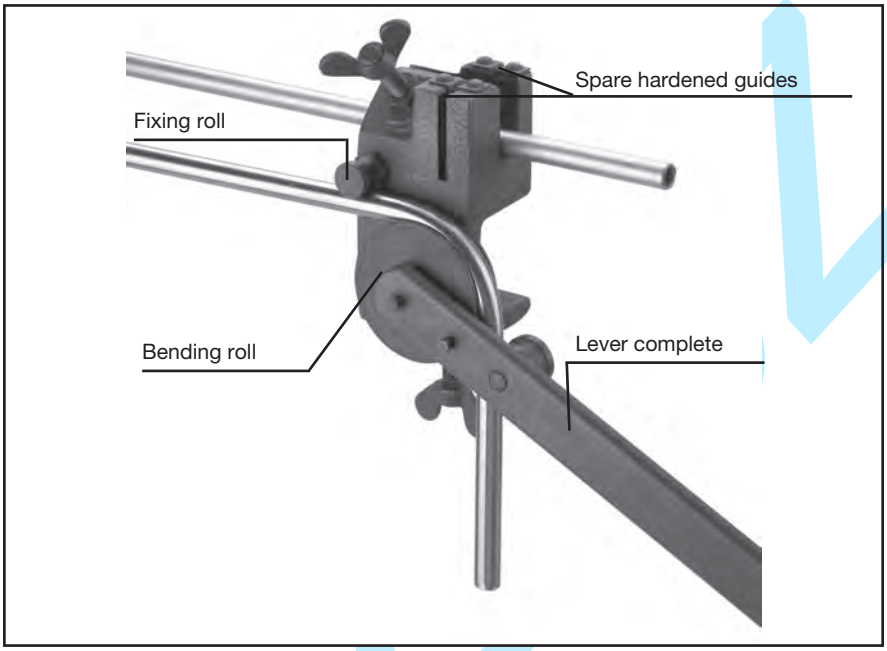

Features, advantages and benefits of combined tube bending and cutting tool:

1. **Bending and cutting** – The BAV 6/12 is a light multi-purpose tool for all small dimension tube assemblies.
2. **Square cut** – Exact tube preparation greatly reduces leakage caused by assembly failures.
3. **No vice required** – For workshop application BAV 6/12 can simply be clamped onto a workbench.
4. **Small bending radii** – Compact tube bends allow tight assemblies.
5. **Light** – At only 2 kg, the BAV 6/12 can be easily brought to the assembly site.
6. **Optimised bending roller contour** – Special shape of bending roller allows small bends without tube flattening.

In-Ex tube deburring tool 226

Material: Plastic, aluminum with hardened steel blades
Tube-O.D.: 4 to 42 mm

Type	Order code
Tube deburrer plastic, 4-38 mm, 3 blades	226B
Tube deburrer aluminium, 10-54 mm, many blades	226Z

Features, advantages and benefits of In-Ex tube deburring tool 226:

1. **Proper deburring** – Exact tube preparation greatly reduces leakage caused by assembly failures.

226B

226Z

Cutting and bending tools

BV 6/18 – Tube bending tool

The BV 6/18 is a flexible bending device for simple but exact bending of EO-tube up to 18 mm tube O.D. The high quality bending results are achieved by 6 interchangeable bending rollers.

The fixing roller can be individually adjusted to produce a precise bend transition.

Specifications:
Tube-O.D.: 6–18 mm
Weight: approx. 4 kg

Type	Order code
Tube bending tool complete device including 6 bending rolls for 6 to 18 mm tube and bending lever	BV06/18KPLX
Spare Parts	
Bending roll 6/8 mm	BV06/1812X
Bending roll 10/12 mm	BV06/1803X
Bending roll 14 mm	BV06/1804X
Bending roll 15 mm	BV06/1805X
Bending roll 16 mm	BV06/1806X
Bending roll 18 mm	BV06/1807X
Fixing roll	BV06/1802X
Lever complete	BV06/1808KPLX

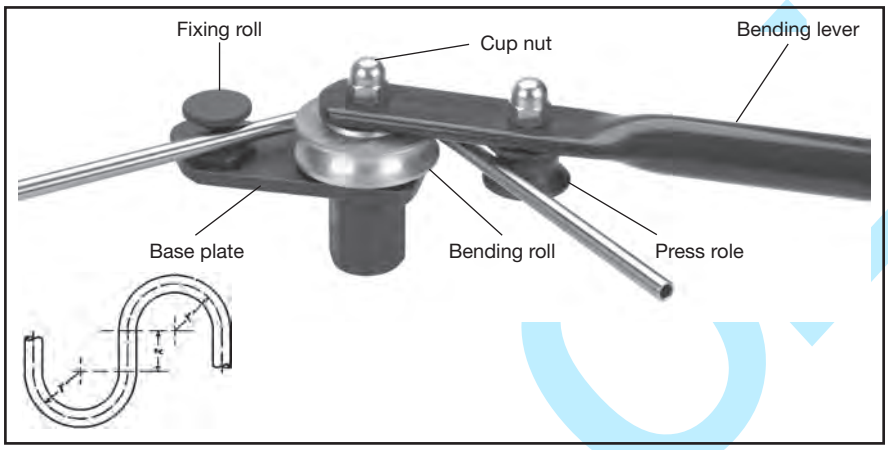

Bending dimensions in mm		
Rolls for tube O.D.	r	≈ X
6	33.0	35
8	34.0	35
10	35.5	35
12	36.5	35
14	36.5	35
15	44.0	38
16	44.0	38
18	51.5	42

Features, advantages and benefits of tube-bending tool:

1. **Vice mounted** – For easy workshop use, the BV can be clamped into a vice.
2. **Small bending radii** – Compact tube bends allow tight assemblies.
3. **Light** – At only 4 kg, the BV 6/18 can be easily brought to each assembly site.
4. **Optimised bending roller contour** – Special shape of bending roller allows small bends without tube flattening.

KOVOCY

BV 20/25 – Tube bending tool

The BV 20/25 allows bending of medium size tube at the assembly site. The bending lever shows two universal studs. A bar extension can either be ordered or locally made.

Specifications:

Tube-O.D.: 20–25 mm
3 bending segments: 20, 22, 25 mm
Bending radius: r = 86,5 mm
x = 52 mm
Weight: approx. 15 kg (without bar extension)

Type	Order code
BV 20/25 Tube bending tool bending device including 3 bending segments for tube O.D. 20 to 25 mm including bending lever without bar extension tube	BV20/25KPLX
Spare Parts	
Bending segment 20 mm	BV20/2501X
Bending segment 22 mm	BV20/2502X
Bending segment 25 mm	BV20/2503X
Fixing arm	BV20/2505X
Lever complete	BV20/2506KPLX
Bar extension tube	BV20/2510X

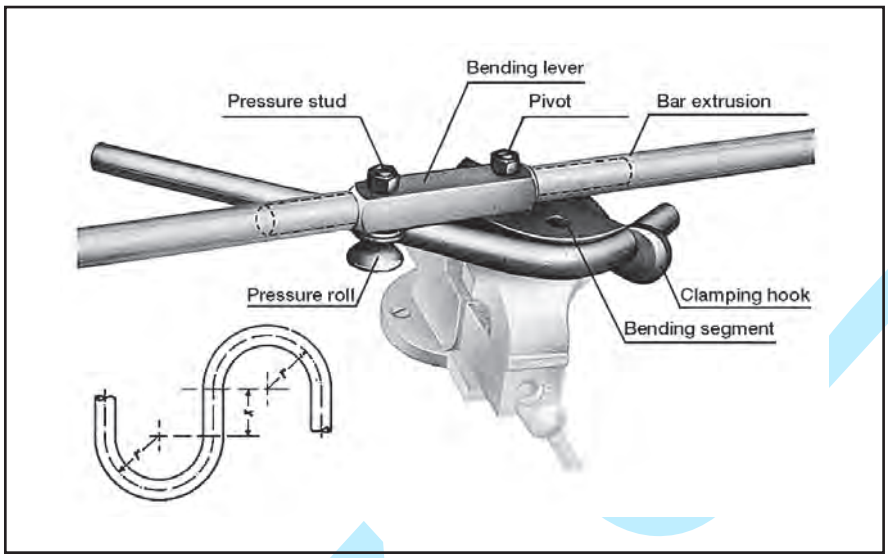

Features, advantages and benefits of tube-bending tool:

1. **Rigid design** – The solid design and the bar extension allow manual bending without heating the tube.
2. **Optimised bending roller contour** – Special shape of bending roller allows small bends without tube flattening.
3. **Shaped clamping** – Tube is not distorted by clamping.
4. **Small bending radii** – Compact tube bends allow for compact assemblies.
5. **Vice mounted** – For easy workshop use, the BV can be clamped into a vice.

Kovaz.si

Hand-tools

Par-Lok wrench

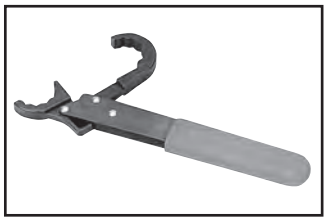

Par-Lok wrench

360° Snap-action ratchet wrench for inch sizes from $^{3}/_{8}$″ to $2^{1}/_{4}$″ accross flats. Inch sizes meet US government specifications and are listed as NSN-5120-00-474-7227.

Easy fitting assembly
Easy access ratchet wrench speeds fittings installation in tight locations. Rugged, snap-action jaws can be opened over tube lines, locked onto fitting hex and ratcheted within $^{1}/_{8}$ turn. Full six point contact prevents fitting distortion common with wrench slippage. Ideal for tube line installations where compact runs required multiple fittings make-up, disassembly and remakes.

Specifications
Par-Lok wrenches are available individually. Par-Lok jaws are constructed from drop-forged, high carbon steel material with a black conversion coat finish. Par-Lok handles are made from heavy gauge steel material, heat treated and with a corrosion resistant black finish. Solid stainless steel rivets and tempered jaw springs are designed into every wrench for maximum strength.

Features, advantages and benefits of Par-Lok wrench:

1. **360°** – No slipping and hexagon damage.
2. **Snap-mechanism** – Ideal for tube fitting assembly.
3. **Light** – Par-Lok wrenches belong in the standard toolbox of each fitting engineer.

Inch Sizes			
Hex Size	Order code	Hex Size	Order code
3/8	860062-6	1 1/8	860062-18
7/16	860062-7	1 1/4	860062-20
1/2	860062-8	1 3/8	860062-22
9/16	860062-9	1 1/2	860062-24
5/8	860062-10	1 5/8	860062-26
1 1/16	860062-11	1 7/8	860062-30
3/4	860062-12	2	860062-32
1 3/16	860062-13	2 1/4	860062-36
7/8	860062-14		
1 5/16	860062-15		
1	860062-16		

Kovaz.cz

WZK – Tool boxes

Tools which are regularly used for tube preparation and bending are available in organized tool boxes. Two sets are available:

Features, advantages and benefits:

1. **Well organised** – Nothing gets dirty, damaged, lost or forgotten.
2. **Practical** – In one box you take everything to the assembly site.
3. **Rigid** – The solid metal box is suitable for daily workshop use.

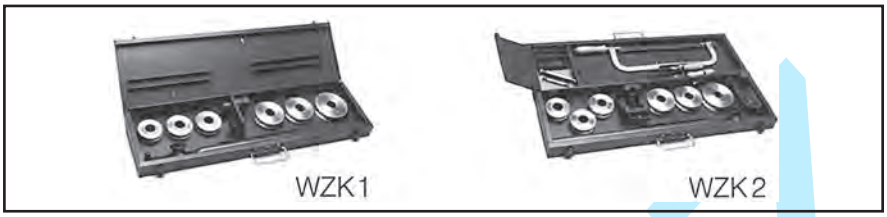

Type	Content	Order code
Toolbox WZK1	BV6/18 tube bending tool	WZK1KOMPLX
Toolbox WZK2	BV6/18 tube Bending tool, AV6/42 tube saw square, Hacksaw, Flat file, Deburring tool, fixture for assembly cones VOMO* and cone-template KONU*	WZK2KOMPLX

*VOMO/KONU are not part of the delivery.

H

kovaz.cz

O-ring assembly tools

CORG O-ring installation tool for O-Lok®

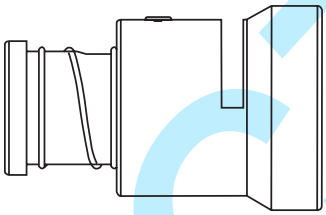

Parker's CORG Assembly Tools are designed to facilitate the installation of the O-ring into the half-dovetail groove of the O-ring face seal fitting. They are available in sizes –4 to –32 (6 mm to 50 mm/1/4″ to 2″ tube).

Ordering

CORG tool Order code	Fitting size	O-ring size
CORG-4	– 4	2-011
CORG-6	– 6	2-012
CORG-8	– 8	2-014
CORG-10	–10	2-016
CORG-12	–12	2-018
CORG-16	–16	2-021
CORG-20	–20	2-025
CORG-24	–24	2-029
CORG-32	–32	2-135

Operation
See chapter F "Fitting assembly" for detailed instructions

The CORG assembly tool is easy to use and can be operated in just a few steps:

1. Insert the O-ring into the slot located on the side of the tool.
2. Position the open end of the tool over the ORFS end of the fitting.
3. With the fitting end bottomed inside the tool, push the piston of the tool until the O-ring is released into the fitting groove.

O-ring pick for O-Lok®

O-ring pick

A plastic O-ring pick to allow easy removal of O-rings without causing damage to the fitting.

Ordering

Type	Order code
Plastic O-ring pick device	O-RINGPICK

Features, advantages and benefits of O-Ring installation tools

1. **Special** – O-ring installation tools are especially designed for O-Lok® fittings with CORG groove. O-rings are not torn or damaged at assembly.

2. **Cost saving** – O-ring installation tools are easy to use and save time and cost when O-rings need to be assembled.

Port cutting tools

Counterbore tools and thread taps for metric ports

For manufacturing metric ports to ISO 6149 (Details see chapter D).

These tools allow correct manufacturing of metric port connections. Counterbore tools are made of high speed tool steel (HSS).

Ordering counterbore tools

ISO 6149 Port size	Order code
	Large Spot face[1])
M 08×1.0	R1449A
M 10×1.0	R1450A
M 12×1.5	R1451A
M 14×1.5	R1452A
M 16×1.5	R1453A
M 18×1.5	R1454A
M 22×1.5	R1455A
M 27×2.0	R1456A
M 33×2.0	R1457A
M 42×2.0	R1458A
M 48×2.0	R1459A

1) with ID-groove

Counterbore tools and thread taps for straight SAE thread ports

For manufacturing UNF ports to SAE J 1926-1 (details see chapter D)

These tools allow correct manufacturing of UNF port connections. Counterbore tools and thread taps are made of high speed tool steel (HSS).

counterbore tools

Use with UNF thread size	SAE dash size	Order code
5/16-24	2	Y-34730
3/8-24	3	Y-34731
7/16-20	4	Y-34732
1/2-20	5	Y-34733
9/16-18	6	Y-34734
3/4-16	8	Y-34735
7/8-14	10	Y-34736
1 1/16-12	12	Y-34737
1 3/16-12	14	Y-34738
1 5/16-12	16	Y-34739
1 5/8-12	29	Y-34740
1 7/8-12	24	Y-34741
2 1/2-12	32	Y-34743

thread taps

Use with UNF thread size	SAE dash size	Order code
5/16-24	2	5/16X24 UNF-2B
3/8-24	3	3/8X24 UNF-2B
7/16-20	4	7/16X20 UNF-2B
1/2-20	5	1/2X20 UNF-2B
9/16-18	6	9/16X18 UNF-2B
3/4-16	8	3/4X16 UNF-2B
7/8-14	10	7/8X14 UNF-2B
1 1/16-12	12	1 1/16X12 UNF-2B
1 3/16-12	14	1 3/16X12 UNF-2B
1 5/16-12	16	1 5/16X12 UNF-2B
1 5/8-12	29	1 5/8X12 UNF-2B
1 7/8-12	24	1 7/8X12 UNF-2B
2 1/2-12	32	2 1/2X12 UNF-2B

kovoz.cz

Operation of port cutting tools

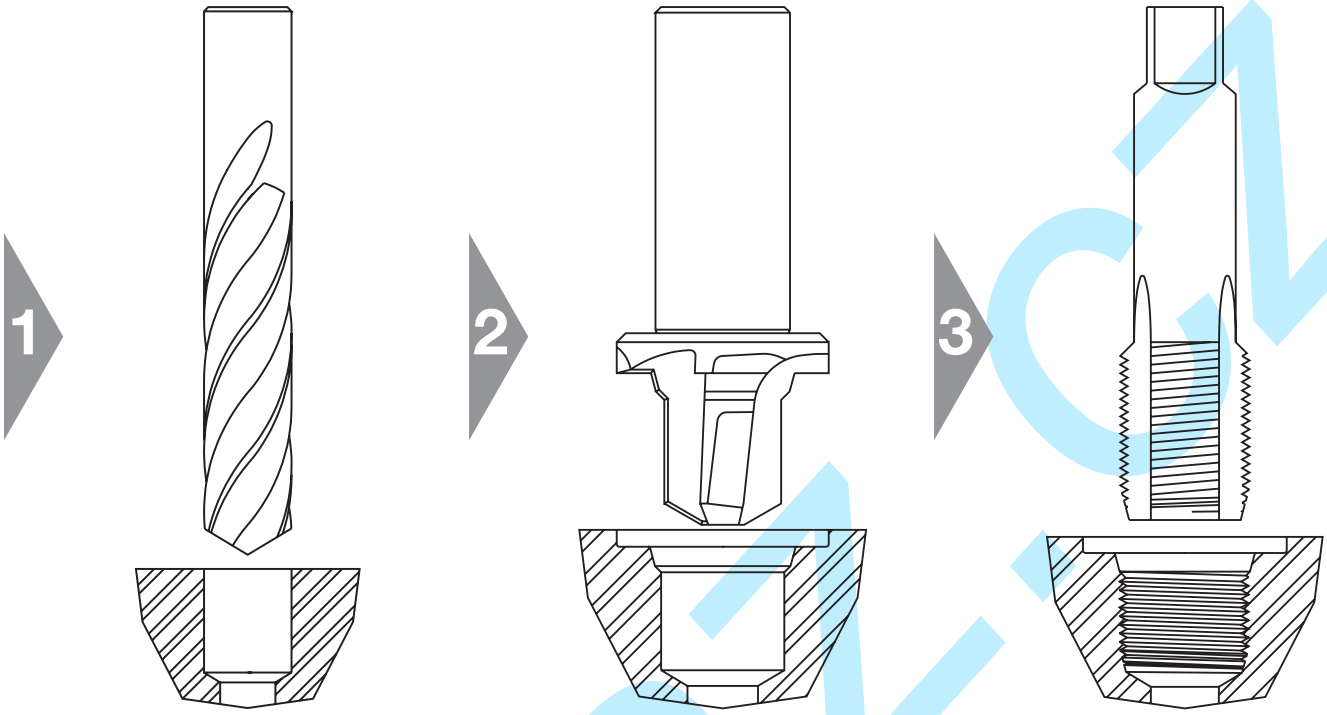

1. Pilot hole drilling **2. Port counterboring** **3. Thread tapping**

Note:
All dimensions must be according to relevant standards. See chapter D for details.
It is necessary to create a spotface surface which is flat and perpendicular to the port. Smooth finish to prevent leakage or O-ring extrusion.

Parker counterbore tools are made from high speed tool steel (HSS). Regular HSS port tapping tools are intented for workshop use and repair.
Maximum lifetime of Parker counterbores can be achieved by:
- use for cutting mild steel or aluminium only
- staying within recommended cutting speed for HSS / port material
- sufficiant lubrication and cooling
- workshop use and repair only

For serial production of hydraulic ports, these Parker workshop tools are not suitable.
For production, Parker generally recommends to use hard carbide alloy.

Kovaz.cz

Thread identification

Thread identification kit

The thread identification tools are beneficial in the assistance of the identification of international threads such as:

- European threads
  (Metric, BSPP, BSPT threads) and
- U.S. threads
  (NPT and SAE straight threads UNF)

The Thread Identification Kit is equipped with a set of callipers, thread profiles, and an instruction booklet.

The components of the thread ID Kit are no high precision gauges but simple instruments for workshop use.

Ordering

Type	Order code
Thread identification kit	MIK-1

Attention: The kit is only available in english!

Portboard

Portboards are suitable for thread identification of male stud connectors. The two portboards are machined with female threads for quick and easy identification by simply screwing the appropriate male port end.

- European
  (Metric, BSPP/BSPT threads)
- U.S.
  (NPT and SAE straight threads UNF)

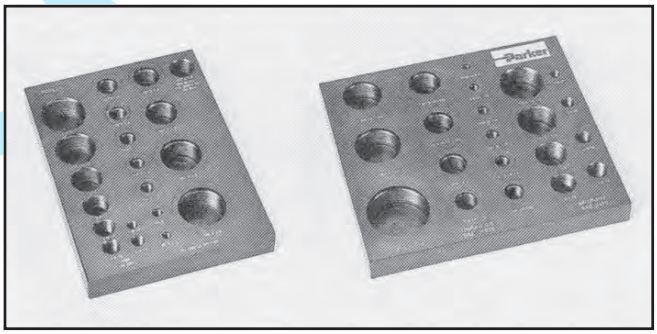

Ordering

Type	Order code
Portboard for NPT and SAE straight threads	PORTBOARD A
Portboard for Metric and BSPP/BSPT threads	PORTBOARD B

Index

Sample case for product presentation

This sample case assists in product presentation. A sample of all HPCE tube fitting systems is included as part of the contents. Individual samples of necessary components such as nuts and rings are provided. All components are clearly arranged in stable, high-quality cases.

Features, advantages and benefits

1. **Valuable sales assistance -** with this sample case you can clearly demonstrate the function and the special features, advantages, and benefits of the Parker HPCE-fitting components.
2. **Practical -** the sample case is incredibly light and can easily be taken on any customer visit. Distributors use the case as a sales aid in stores.
3. **Efficient -** the case can be used quick and with little effort
4. **Durable -** the components in the case are made entirely of stainless steel, are robust, and shine just as much after years of use as they did when they were new.
5. **Dry Technology -** the sample case is a practical and powerful sales aid. The components of all fitting types- whether a cutting ring system or *Dry Technology* - are arranged clearly.

Ordering

Type	Order code
HPCE sample case	TFDE-SAMPLECASE

kovak

Parker

Ermeto Original
DIN fittings

Visual index

Fitting components

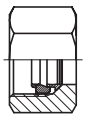

FM
p. I10

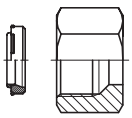

FORM
p. I12

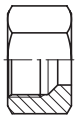

M
p. I14

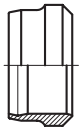

D
p. I15

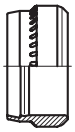

PSR
p. I15

DPR
p. I16

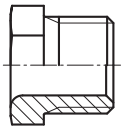

S
p. I17

Tube to tube

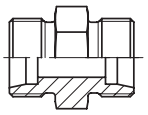

G
p. I18

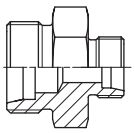

GR
p. I19

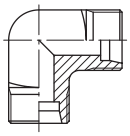

W
p. I20

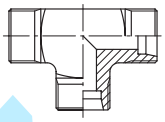

T
p. I21

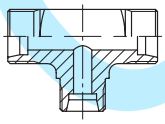

TR
p. I22

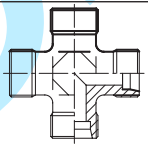

K
p. I24

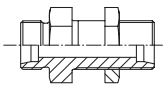

SV
p. I25

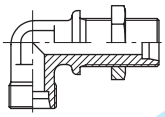

WSV
p. I26

Tube to swivel

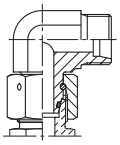

EW
p. I27

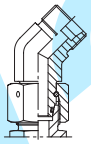

EV
p. I28

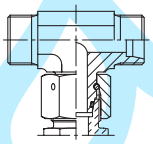

ET
p. I29

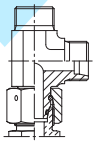

EL
p. I30

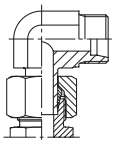

EVW
p. I31

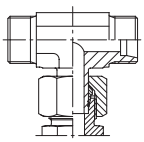

EVT
p. I32

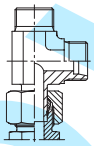

EVL
p. I33

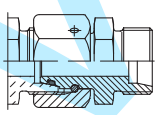

DA
p. I34

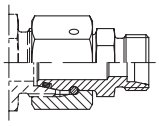

RED
p. I35

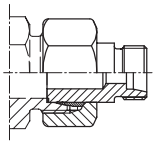

KOR (Steel/Brass)
p. I39

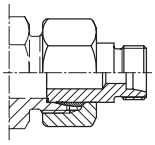

KOR (Stainless steel)
p. I42

Swivel to swivel

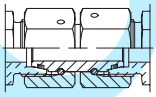

GZ
p. I44

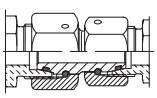

GZR
p. I45

Male stud connector

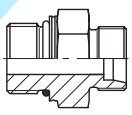

GEO
p. I47

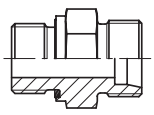

GE-M-ED
p. I48

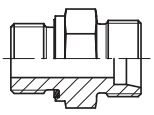

GE-R-ED
p. I49

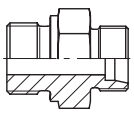

GE-R
p. I51

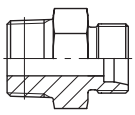

GE-R(KEG)
p. I53

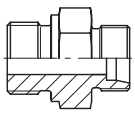

GE-M
p. I54

Visual index

Male stud connector

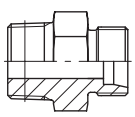

GE-M(KEG)
p. I55

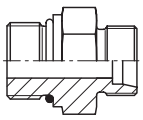

GE-UNF/UN
p. I56

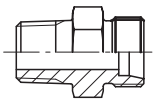

GE-NPT
p. I57

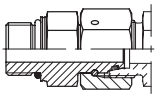

EGEO
p. I59

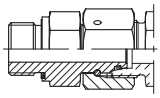

EGE-M-ED
p. I60

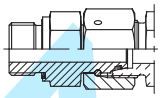

EGE-R-ED
p. I61

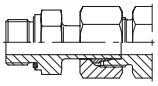

EVGE-M-ED
p. I62

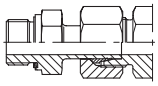

EVGE-R-ED
p. I63

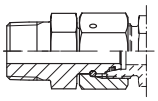

EGE-NPT
p. I64

Swivel adjustable

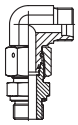

EW-M-ED
p. I65

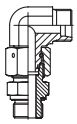

EW-R-ED
p. I66

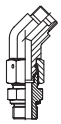

EV-M-ED
p. I67

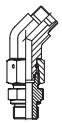

EV-R-ED
p. I68

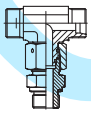

ET-M-ED
p. I69

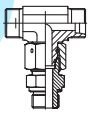

ET-R-ED
p. I70

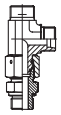

EL-M-ED
p. I71

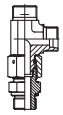

EL-R-ED
p. I72

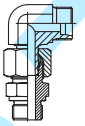

EVW-M
p. I73

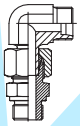

EVW-R
p. I74

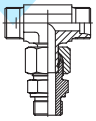

EVT-M
p. I75

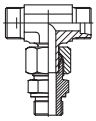

EVT-R
p. I76

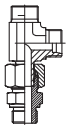

EVL-M
p. I77

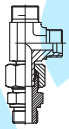

EVL-R
p. I78

Locknut adjustable

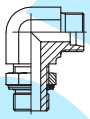

WEE-R
p. I79

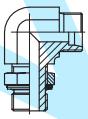

WEE-OR
p. I80

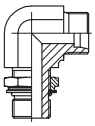

WEE-M
p. I80

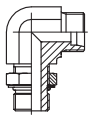

WEE-UNF
p. I80

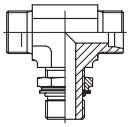

TEE-OR
p. I80

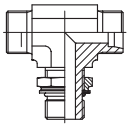

TEE-M
p. I80

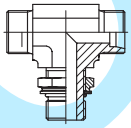

TEE-R
p. I80

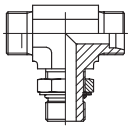

TEE-UNF
p. I80

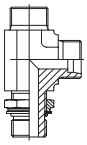

LEE-OR
p. I80

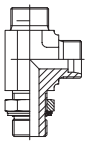

LEE-M
p. I80

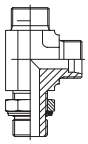

LEE-R
p. I80

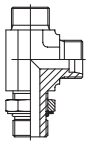

LEE-UNF
p. I80

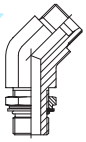

VEE-OR
p. I80

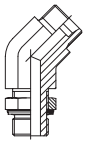

VEE-M
p. I80

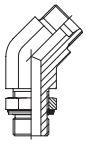

VEE-R
p. I80

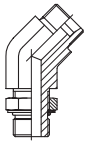

VEE-UNF
p. I80

kovaz.cz

Visual index

Banjo fittings	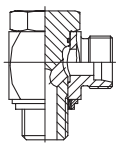 **WH-M-KDS** p. I81	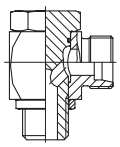 **WH-M** p. I82	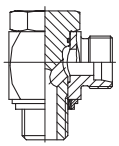 **WH-R-KDS** p. I83	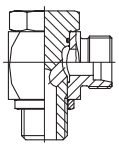 **WH-R** p. I84	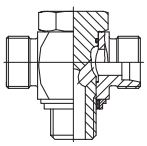 **TH-M-KDS** p. I85	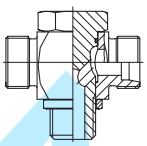 **TH-M** p. I86
	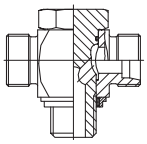 **TH-R-KDS** p. I87	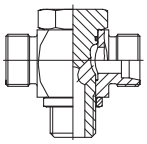 **TH-R** p. I88	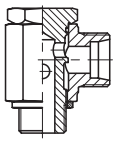 **SWVE-M/KDS** p. I89	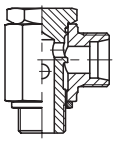 **SWVE-R/KDS** p. I90		
Non adjustable	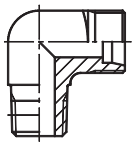 **WE-NPT** p. I91	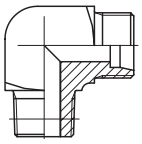 **WE-M(KEG)** p. I92	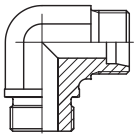 **WE-M** p. I93	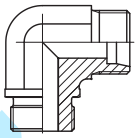 **WE-R** p. I94	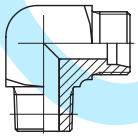 **WE-R (KEG)** p. I95	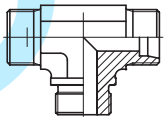 **TE-M** p. I96
	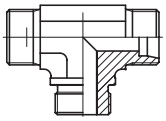 **TE-R** p. I97	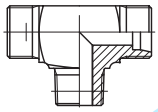 **TE-R (KEG)** p. I98	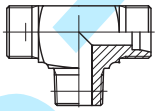 **TE-M(KEG)** p. I99	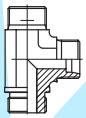 **LE-M** p. I100	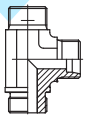 **LE-R** p. I101	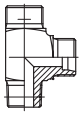 **LE-R (KEG)** p. I102
	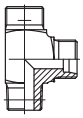 **LE-M(KEG)** p. I103					
Tube to female	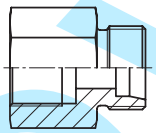 **GAI-M** p. I104	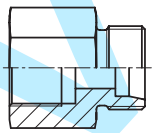 **GAI-R** p. I105	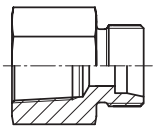 **GAI-NPT** p. I106			
Port reducers	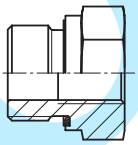 **RI-ED** p. I107	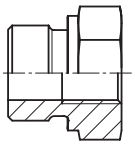 **RI** p. I108				
Pressure gauge adapter	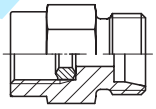 **MAV** p. I109	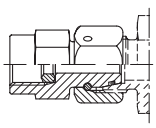 **MAVE** p. I110				

Kovaz.cz

Visual index

Plugs	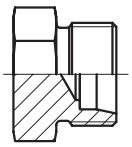 **ROV** p. I111	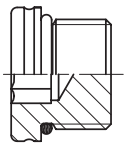 **VSTI M-OR** p. I112	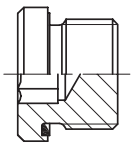 **VSTI M/R-ED** p. I113	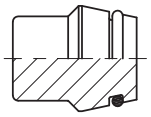 **VKA** p. I114	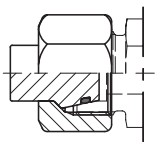 **VKAM** p. I115	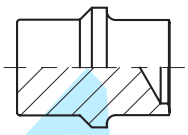 **BUZ** p. I116
	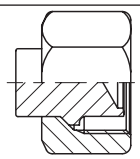 **BUZM** p. I117					
Components	**GM** p. I118	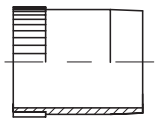 **VH** p. I119	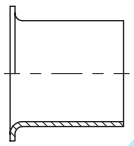 **E** p. I120	**DOZ** p. I121	**ED** p. I122	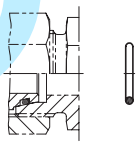 **OR** p. I123
	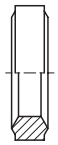 **DKI** p. I125	**KDS** p. I126	**KD** p. I127	**DKA** p. I128		

Kovaz.cz

How to order

GE-R-ED Male stud connector

Male BSPP thread – ED-seal (ISO 1179) / EO 24° cone end

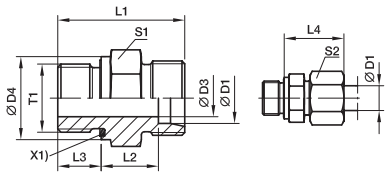

X1) Eolastic-sealing ED

Series	D1	T1	D3	D4	L1	L2	L3	L4	S1	S2	Weight g/1 piece	Order code*	PN (bar)[1] CF	71	MS
LL[2]	04	G 1/8 A	3	14	20.0	9.5	6.5	19	14	10	10	**GE04LLREDOMD**	100	100	63
	06	G 1/8 A	4	14	20.0	8.0	6.5	20	14	12	11	**GE06LLREDOMD**	100	100	63
L[3]	06	G 1/8 A	4	14	23.5	8.5	8.0	23	14	14	13	**GE06LREDOMD**	500	315	200
	06	G 1/4 A	4	19	29.0	10.0	12.0	25	19	14	28	**GE06LR1/4EDOMD**	500	315	200
	06	G 3/8 A	4	22	30.5	11.5	12.0	26	22	14	44	**GE06LR3/8EDOMD**	420	315	200
	06	G 1/2 A	4	27	33.0	12.0	14.0	27	27	14	61	**GE06LR1/2EDOMD**	400	315	200
	08	G 1/4 A	6	19	29.0	10.0	12.0	25	19	17	27	**GE08LREDOMD**	500	315	200
	08	G 1/8 A	4	14	24.5	9.5	8.0	24	14	17	16	**GE08LR1/8EDOMD**	500	315	200
	08	G 3/8 A	6	22	30.5	11.5	12.0	26	22	17	45	**GE08LR3/8EDOMD**	420	315	200
	08	G 1/2 A	6	27	33.0	12.0	14.0	27	27	17	74	**GE08LR1/2EDOMD**	400	315	200
	10	G 1/4 A	6	19	30.0	11.0	12.0	26	19	19	29	**GE10LREDOMD**	500	315	200
	10	G 1/8 A	4	14	25.5	10.5	8.0	25	17	19	21	**GE10LR1/8EDOMD**	500	315	200
	10	G 3/8 A	8	22	31.5	12.5	12.0	27	22	19	43	**GE10LR3/8EDOMD**	420	315	200
	10	G 1/2 A	8	27	34.0	13.0	14.0	28	27	19	71	**GE10LR1/2EDOMD**	400	315	200
	12	G 3/8 A	9	22	31.5	12.5	12.0	27	22	22	41	**GE12LR3/8EDOMD**	420	315	200
	12	G 1/8 A	4	14	26.5	11.5	8.0	26	19	22	26	**GE12LR1/8EDOMD**	420	315	200
	12	G 1/4 A	6	19	31.0	12.0	12.0	27	19	22	3	**GE12LR1/4EDOMD**	00	315	200
	12	G 1/2 A	10	27	34.0	13.0	14.0	28	27	22	6	**GE12LR1/2EDOMD**	0	315	200
	12	G 3/4 A	10	32	37.0	14.0	16.0	29	32	22	1	**GE12LR3/4EDOMD**	0	160	100
	15	G 1/2 A	11	27	35.0	14.0	14.0	29	27	27		**GE15LREDOMD**	0	315	200
	15	G 3/8 A	9	22	32.5	13.5	12.0	29	24	27		**GE15LR3/8EDOMD**	0	315	200
	15	G 3/4 A	12	32	38.0	15.0	16.0	30	32	27	11	**GE15LR3/4EDOMD**	0	160	100
	18	G 1/2 A	14	27	36.0	14.5	14.0	31	27	32	7	**GE18LREDOMD**	00	315	200
	18	G 3/8 A	9	22	33.5	14.0	12.0	30	27	32	66	**GE18LR3/8EDOMD**	400	315	200
	18	G 3/4 A	15	32	38.0	14.5	16.0	31	32	32	110	**GE18LR3/4EDOMD**	250	160	100
	22	G 3/4 A	18	32	40.0	16.5	16.0	33	32	36	102	**GE22LR3/4EDOMD**	250	160	100
	22	G 1/2 A	14	27	38.0	16.5	14.0	33	32	36	91	**GE22LR1/2EDOMD**	250	160	100
	22	G 1 A	19	40	43.0	17.5	18.0	34	41	36	189	**GE22LR1EDOMD**	250	160	100
	28	G 1 A	23	40	43.0	17.5	18.0	34	41	41	170	**GE28LREDOMD**	250	160	100
	28	G 3/4 A	18	32	41.0	17.5	16.0	34	41	41	159	**GE28LR3/4EDOMD**	250	160	100
	28	G 1 1/4 A	24	50	46.0	18.5	20.0	35	50	41	316	**GE28LR11/4EDOMD**	250	160	100
	35	G 1 1/4 A	30	50	48.0	17.5	20.0	39	50	50	272	**GE35LREDOMD**	250	160	100
	35	G 1 A	23	40	46.0	17.5	18.0	39	46	50	226	**GE35LR1EDOMD**	250	160	100
	35	G 1 1/2 A	30	55	52.0	19.5	22.0	41	55	50	423	**GE35LR11/2EDOMD**	250	160	100
	42	G 1 1/2 A	36	55	52.0	19.0	22.0	42	55	60	343	**GE42LREDOMD**	250	160	100
	42	G 1 A	23	40	48.0	19.0	18.0	42	55	60	324	**GE42LR1EDOMD**	250	160	100
	42	G 1 1/4 A	30	50	50.0	19.0	20.0	42	55	60	348	**GE42LR11/4EDOMD**	250	160	100

[1] Pressure shown = item deliverable
[2] LL = very light series; [3] L = light series

$\frac{PN\ (bar)}{10}$ = PN (MPa)

Delivery without nut and ring. Information on ordering complete fittings or alternative sealing materials see page I7.

*Please add the **suffixes** below according to the material/surface required.

Material		Standard sealing material (no additonal. suffix needed)
Steel, zinc plated, Cr(VI)-free	GE18LREDOMDCF	
Stainless Steel	GE18LREDOMD71	NBR
Brass	GE18LREDOMDMS	VIT
		NBR

The corresponding order variant is contained in the table printed at the bottom of every DIN chapter.

The right way to order made easy!

Step 1
Selecting order code

1.1 All fitting sizes available in our fitting program are clearly listed in the index at the front of this catalogue.

1.2 Open the catalogue at the corresponding page containing detailed information of the product of your choice.

1.3 Select the required fitting size! The basic order code is printed in bold type on the right-hand side of the table of dimensions.

Example: **GE16SREDOMD**

Step 2
Selecting material, surface and sealing-material

Now simply add the corresponding code for the surface and material variant of the product you require to the basic order code.
This code is contained in the table printed at the bottom of every page.

2.1 Alternative sealing material

Example: Cr(VI)-free steel fitting with ED-seal in FKM material.
GE16SRED+OMD+**VIT+CF**
= GE16SREDVITOMDCF

Example: Stainless steel fitting with ED-seal in NBR material (e. g. Perbunan).
GE16SRED**OMD+NBR+71**
= GE16SREDNBROMD71

Step 3
When ordering fittings complete with nuts and rings

3.1. Metal sealed cutting rings PSR/DPR/D: For these types please delete the 'OMD' or 'X' suffixes.
Example: **GE16SREDCF**

3.2. Soft sealed EO-2 functional nut: For these types please delete the 'OMD' or 'X' suffixes and add a **'Z'** before the series suffix (LL, L, S)
Example: **order with EO-2 functional nut**
GE16**(+Z)**SREDCF
= GE16ZSREDCF

Perbunan = registered trademark of Bayer

How to order EO-Fittings:

Nomenclature

Example: **GE16ZSR3/8ED CF**

Type
Code for shape or style see visual index

Tube-O.D. Dia in mm
Example:
16 16 mm Dia

PSR/DPR/EO-2 Version

(blank)	PSR/DPR/D Cutting Ring D for LL-Series and brass Progressivring DPR for stainless steel Progressive Stop Ring PSR for steel
Z	EO-2

Series

LL	Very Light
L	Light
S	Heavy

Thread type and size

Type

M…	Metric parallel
M…KEG	Metric tapered
R…	BSPP
R…KEG	BSPT
…UN/UNF	SAE straight
…NPT	Pipe thread

Size
No size: standard
Thread size

Example:
1/2 1/2″
(only shown on jump sizes)

Seal type

(blank)		Standard seal
	ISO 6149	O-ring
	M/R	Metal cutting edge
	M/R KEG	Tapered thread
	UN/UNF	O-ring
	NPT	Tapered thread
ED	M/R	Eolastic seal
KD	WH/TH	Plastic banjo seal
KDS	WH/TH	Elastomeric banjo seal

Fitting material/coating

CF	Cr(VI)-free
71	Stainless steel
MS	Brass
(blank)	Steel, black phosphated (Special)

Assembly

OMD	Without nut and ring, but including all other components such as seals
X	Body only Basic fitting body without any nut, ring, seal or other Component

Seal material

NBR	Nitrile Rubber (Omitted for steel and brass fittings)
VIT	Fluorocarbon FKM (Omitted for stainless steel fittings)

Examples

Order code	Description
GE12ZSR1/2EDCF	Straight male stud, EO-2, 20 mm tube O.D., heavy series, G 1/2 BSPP, Eolastic seal, complete with nut and ring, Cr(VI)-free steel fitting, all seals NBR
GE12LR71X	Straight male stud, 12 mm tube O.D., light series, G 3/8 BSPP, metal seal type B, stainless steel fitting, body only

Order code	Description
EVT08LOMDMS	Adjustable standpipe branch tee, 8 mm tube O.D., light series, brass fitting without nut and ring, standpipe preassembled with nut and ring.
EL38VITOMDCF	Adjustable swivel nut run tee 38 mm tube O.D., heavy series, zinc-plated steel fitting without nut and ring. Swivel nut end with FKM seal
DOZ04LL	Spare seal for EO-2 joints, 4 mm O.D., very light series, steel with nitrile rubber seal

Perbunan = registered trademark of Bayer

Codes for fittings/styles shapes

BUZ	Blanking plug for cones
D	Cutting ring – EO 24° cone end
DA	Distance piece adapter – EO 24° DKO swivel/EO 24° cone end
DKA	Sealing ring for banjo fittings WH/TH and SWVE
DKI	Sealing ring for pressure gauge connectors
DOZ	EO-2 Soft sealing ring
DPR	Progressive ring – EO 24° cone end
E	Tube/hose insert for plastic tubing
ED	Eolastic soft seal (for BSPP and metric parallel threads)
EGE-M-ED	Swivel connector – Male metric thread – ED-seal (ISO 9974)/EO 24° DKO swivel
EGE-NPT	Swivel connector – Male NPT thread (SAE J476)/EO 24° DKO swivel
EGEO	Swivel connector – Male metric thread – O-ring (ISO 6149)/EO 24° DKO swivel
EGE-R-ED	Swivel connector – Male BSPP thread – ED-seal (ISO 1179)/EO 24° DKO swivel
EL	Swivel nut run tee – EO 24° cone end/EO 24° DKO swivel
EL-M-ED	Assembled adjustable swivel run tee – EO 24° cone end/Male metric thread – ED-seal (ISO 9974)
EL-R-ED	Assembled adjustable swivel run tee – EO 24° cone end/Male BSPP thread – ED-seal (ISO 1179)
ET	Swivel nut branch tee – EO 24° cone end/EO 24° DKO swivel
ET-M-ED	Assembled adjustable swivel branch tee – EO 24° cone end/Male metric thread – ED-seal (ISO 9974)
ET-R-ED	Assembled adjustable swivel branch tee – EO 24° cone end/Male BSPP thread – ED-seal (ISO 1179)
EV	Swivel nut 45° elbow – EO 24° cone end/EO 24° DKO swivel
EVGE-M-ED	Standpipe connector – Male metric thread – ED (ISO 9974)/EO standpipe adjustable
EVGE-R-ED	Standpipe connector – Male BSPP thread – ED-seal (ISO 1179)/EO standpipe adjustable
EVL	Standpipe run tee – EO 24° cone end/EO stand pipe adjustable
EVL-M	Assembled adjustable standpipe run tee – EO 24° cone end/Male metric thread – metal sealing edge (ISO 9974)
EVL-R	Assembled adjustable standpipe run tee – EO 24° cone end/Male BSPP thread – metal sealing edge (ISO 1179)
EV-M-ED	Assembled adjustable swivel 45° elbow – EO 24° cone end/Male metric thread – ED-seal (ISO 9974)
EV-R-ED	Assembled adjustable swivel 45° elbow – EO 24° cone end/Male BSPP thread – ED-seal (ISO 1179)
EVT	Standpipe branch tee – EO 24° cone end/EO stand pipe adjustable
EVT-M	Assembled adjustable standpipe branch tee – EO 24° cone end/Male metric thread – metal sealing edge (ISO 9974)
EVT-R	Assembled adjustable standpipe branch tee – EO 24° cone end/Male BSPP thread – metal sealing edge (ISO 1179)
EVW	Standpipe elbow – EO 24° cone end/EO stand pipe adjustable
EVW-M	Assembled adjustable standpipe elbow – EO 24° cone end/Male metric thread – metal sealing edge (ISO 9974)
EVW-R	Assembled adjustable standpipe elbow – EO 24° cone end/Male BSPP thread – metal sealing edge (ISO 1179)
EW	Swivel nut elbow – EO 24° cone end/EO 24° DKO swivel
EW-M-ED	Assembled adjustable swivel elbow – EO 24° cone end/Male metric thread – ED-seal (ISO 9974)
EW-R-ED	Assembled adjustable swivel elbow – EO 24° cone end/Male BSPP thread – ED-seal (ISO 1179)
FM	EO2 Functional nut
FORM	EO2-FORM Set
G	Union – EO 24° cone end
GAI-M	Female connector – Female metric thread (ISO 9974-1)/EO 24° cone end
GAI-NPT	Female connector – Female NPT thread (SAE 476)/EO 24° cone end
GAI-R	Female connector – Female BSPP thread (ISO 1179-1)/EO 24° cone end
GE-M	Male stud connector – Male metric thread – metal sealing edge (ISO 9974)/EO 24° cone end
GE-M (KEG)	Male stud connector – Male short metric taper thread (DIN 3852-1, type C)/EO 24° cone end
GE-M-ED	Male stud connector – Male metric thread – ED (ISO 9974)/EO 24° cone end
GE-NPT	Male stud connector – Male NPT thread (SAE J476)/EO 24° cone end
GEO	Male stud connector – Male metric thread – O-ring (ISO 6149)/EO 24° cone end
GE-R	Male stud connector – Male BSPP thread – metal sealing edge (ISO 1179)/EO 24° cone end
GE-R (KEG)	Male stud connector – Male short BSP taper thread (DIN 3852-2, type C)/EO 24° cone end
GE-R-ED	Male stud connector – Male BSPP thread – ED-seal (ISO 1179)/EO 24° cone end
GE-UNF/UN	Male stud connector – Male UNF/UN thread – O-ring (ISO 11926)/EO 24° cone end
GM	Locknut for bulkheads SV and WSV
GR	Straight reducer – EO 24° cone end
GZ	Swivel union – EO 24° DKO swivel
GZR	Swivel reducer – EO 24° DKO swivel
K	Union cross – EO 24° cone end

Codes for fittings/styles shapes

KD	Soft sealing ring for banjo fittings WH/TH from stainless steel
KDS	Soft sealing ring for banjo fittings SWVE, WH and TH from steel
KOR	Tube end reducer – Steel and Brass – EO stand pipe adjustable/EO 24° cone end
LEE	Adjustable locknut run tee – EO 24° cone end/Adjustable thread
LE-M	Male stud run tee – EO 24° cone end/Male metric thread – metal sealing edge (ISO 9974)
LE-M (KEG)	Male stud run tee – EO 24° cone end/Male short metric taper thread (DIN 3852-1, Form C)
LE-R	Male stud run tee – EO 24° cone end/Male BSPP thread – metal sealing edge (ISO 1179)
LE-R (KEG)	Male stud run tee – EO 24° cone end/Male short BSP taper thread (DIN 3852-2, type C)
M	Nut- EO 24° Cone end
MAV	Pressure gauge connector – Female BSPP thread/EO 24° cone end
MAVE	Pressure gauge swivel connector – Female BSPP thread/EO 24° DKO swivel
OR	O-ring
PSR	Progressive stop ring – EO 24° cone end
RED	Tube end reducer – EO 24° DKO swivel/EO 24° cone end
RI	Thread reducer/expander – Male BSPP thread – metal sealing edge (ISO 1179)/Female BSPP thread (ISO 1179-1)
RI-ED	Thread reducer/expander – Male BSPP thread – ED-seal (ISO 1179)/Female BSPP thread (ISO 1179-1)
ROV	Blanking plug for tube ends – EO 24° cone end
S	Sleeve screw – for threaded ports according to DIN 3854
SV	Bulkhead union – EO 24° cone end
SWVE-M	Metric male stud banjo elbow – EO 24° cone end/Metric male stud with metal seal ring
SWVE-M-KDS	Metric male stud banjo elbow – EO 24° cone end/Metric male stud with soft seal ring
SWVE-R	BSPP male stud banjo elbow – EO 24° cone end/BSPP male stud with metal seal ring
SWVE-R-KDS	BSPP male stud banjo elbow – EO 24° cone end/BSPP male stud with soft seal ring
T	Union T – EO 24° cone end
TEE	Adjustable locknut branch tee – EO 24° cone end/Adjustable thread
TE-M	Male stud branch tee – EO 24° cone end/Male metric thread – metal sealing edge (ISO 9974)
TE-M (KEG)	Male stud branch tee – EO 24° cone end/Male short metric taper thread (DIN 3852-1, type C)
TE-R	Male stud branch tee – EO 24° cone end/Male BSPP thread – metal sealing edge (ISO 1179)
TE-R (KEG)	Male stud branch tee – EO 24° cone end/Male short BSP taper thread (DIN 3852-2, type C)
TH-M	High pressure banjo tee – EO 24° cone end/Male metric thread with metal sealing ring
TH-M-KDS	High pressure banjo tee – EO 24° cone end/Male metric thread with soft seal ring
TH-R	High pressure banjo tee – EO 24° cone end/Male BSPP thread with metal sealing ring
TH-R-KDS	High pressure banjo tee – EO 24° cone end/Male BSPP thread with soft seal ring
TR	Tee Reducer – EO 24° cone end
VEE	Adjustable locknut 45° elbow – EO 24° cone end/Adjustable thread
VH	Support sleeve for thin-walled metal tubing
VKA	Blanking plug for cones – EO 24° DKO swivel
VKAM	Blanking plug with nut for cone – EO 24° DKO swivel
VSTI M/R-ED	Blanking plug for ports – Male metric thread – ED-seal (ISO 9974) – Male BSPP thread – ED-seal (ISO 1179)
VSTI M-OR	Blanking plug for ports – Male metric thread – O-ring (ISO 6149)
W	Union elbow – EO 24° cone end
WEE	Adjustable locknut elbow – EO 24° cone end/Adjustable thread
WE-M	Male stud elbow – EO 24° cone end/Male metric thread – metal sealing edge (ISO 9974)
WE-M (KEG)	Male stud elbow – EO 24° cone end/Male short metric taper thread (DIN 3852-1. type C)
WE-NPT	Male stud elbow – EO 24° cone end/Male NPT thread (SAE J476)
WE-R	Male stud elbow – EO 24° cone end/Male BSPP thread – metal sealing edge (ISO 1179)
WE-R (KEG)	Male stud elbow – EO 24° cone end/Male short BSP taper thread (DIN 3852-2, type C)
WH-M	High pressure banjo elbow – EO 24° cone end/Male metric thread with metal sealing ring
WH-M-KDS	High pressure banjo elbow – EO 24° cone end/Male metric thread with soft seal ring
WH-R	High pressure banjo elbow – EO 24° cone end/Male BSPP thread with metal sealing ring
WH-R-KDS	High pressure banjo elbow – EO 24° cone end/Male BSPP thread with soft seal ring
WSV	Bulkhead elbow – EO 24° cone end

FM EO2-Functional nut

for steel tubes

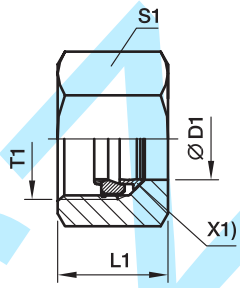

X1) Retaining ring

Series	D1	T1	L1	S1	Order code FM…CF Steel, zinc plated Cr(VI) free passiv. +Sealing Sealing NBR	PN (bar)	Order code FM…VITCF Steel, zinc plated Cr(VI) free passiv. +Sealing Sealing FKM	PN (bar)	Weight g/1 piece
LL	04	M 08×1.0	11.0	10	**FM04LLCF**	100	–	100	5
	06	M 10×1.0	11.5	12	–	–	–	–	6
L	06	M 12×1.5	14.5	14	**FM06LCF**	500	**FM06LVITCF**	500	12
	08	M 14×1.5	14.5	17	**FM08LCF**	500	**FM08LVITCF**	500	17
	10	M 16×1.5	15.5	19	**FM10LCF**	500	**FM10LVITCF**	500	22
	12	M 18×1.5	15.5	22	**FM12LCF**	400	**FM12LVITCF**	400	30
	15	M 22×1.5	17.0	27	**FM15LCF**	400	**FM15LVITCF**	400	48
	18	M 26×1.5	18.0	32	**FM18LCF**	400	**FM18LVITCF**	400	70
	22	M 30×2.0	20.0	36	**FM22LCF**	250	**FM22LVITCF**	250	94
	28	M 36×2.0	21.0	41	**FM28LCF**	250	**FM28LVITCF**	250	106
	35	M 45×2.0	24.0	50	**FM35LCF**	250	**FM35LVITCF**	250	160
	42	M 52×2.0	24.0	60	**FM42LCF**	250	**FM42LVITCF**	250	244
S	06	M 14×1.5	16.5	17	**FM06SCF**	800	**FM06SVITCF**	800	20
	08	M 16×1.5	16.5	19	**FM08SCF**	800	**FM08SVITCF**	800	23
	10	M 18×1.5	17.5	22	**FM10SCF**	800	**FM10SVITCF**	800	37
	12	M 20×1.5	17.5	24	**FM12SCF**	630	**FM12SVITCF**	630	39
	16	M 24×1.5	20.5	30	**FM16SCF**	630	**FM16SVITCF**	630	72
	20	M 30×2.0	24.0	36	**FM20SCF**	420	**FM20SVITCF**	420	121
	25	M 36×2.0	27.0	46	**FM25SCF**	420	**FM25SVITCF**	420	221
	30	M 42×2.0	29.0	50	**FM30SCF**	420	**FM30SVITCF**	420	248
	38	M 52×2.0	32.5	60	**FM38SCF**	420	**FM38SVITCF**	420	367

$\frac{\text{PN (bar)}}{10}$ = PN (MPa)

FM EO2-Functional nut

for stainless steel tubes

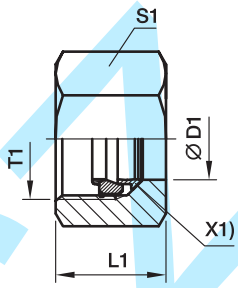

X1) Retaining ring

Series	D1	T1	L1	S1	Order code FM…71 Stainless Steel Sealing FKM	PN (bar)	FM…NBR71 Stainless Steel Sealing NBR	PN (bar)	FM…SSA Steel, zinc plated Cr(VI) free passiv. +Sealing, Retaining ring: Stainless Steel Sealing NBR	PN (bar)	FM…VITSSA Steel, zinc plated Cr(VI) free passiv. +Sealing, Retaining ring: Stainless Steel Sealing FKM	PN (bar)	Weight g/1 piece
LL	04	M 08×1.0	11.0	10	—	—	—	—	**FM04LLSSA**	100	—	—	5
	06	M 10×1.0	11.5	12	—	—	—	—	**FM06LLSSA**	100	—	—	6
L	06	M 12×1.5	14.5	14	**FM06L71**	315	**FM06LNBR71**	315	**FM06LSSA**	315	**FM06LVITSSA**	315	12
	08	M 14×1.5	14.5	17	**FM08L71**	315	**FM08LNBR71**	315	**FM08LSSA**	315	**FM08LVITSSA**	315	17
	10	M 16×1.5	15.5	19	**FM10L71**	315	**FM10LNBR71**	315	**FM10LSSA**	315	**FM10LVITSSA**	315	22
	12	M 18×1.5	15.5	22	**FM12L71**	315	**FM12LNBR71**	315	**FM12LSSA**	315	**FM12LVITSSA**	315	30
	15	M 22×1.5	17.0	27	**FM15L71**	315	**FM15LNBR71**	315	**FM15LSSA**	315	**FM15LVITSSA**	315	48
	18	M 26×1.5	18.0	32	**FM18L71**	315	**FM18LNBR71**	315	**FM18LSSA**	315	**FM18LVITSSA**	315	70
	22	M 30×2.0	20.0	36	**FM22L71**	160	**FM22LNBR71**	160	**FM22LSSA**	160	**FM22LVITSSA**	160	94
	28	M 36×2.0	21.0	41	**FM28L71**	160	**FM28LNBR71**	160	**FM28LSSA**	160	**FM28LVITSSA**	160	106
	35	M 45×2.0	24.0	50	**FM35L71**	160	**FM35LNBR71**	160	**FM35LSSA**	160	**FM35LVITSSA**	160	160
	42	M 52×2.0	24.0	60	**FM42L71**	160	**FM42LNBR71**	160	**FM42LSSA**	160	**FM42LVITSSA**	160	244
S	06	M 14×1.5	16.5	17	**FM06S71**	630	**FM06SNBR71**	630	**FM06SSSA**	630	**FM06SVITSSA**	630	20
	08	M 16×1.5	16.5	19	**FM08S71**	630	**FM08SNBR71**	630	**FM08SSSA**	630	**FM08SVITSSA**	630	23
	10	M 18×1.5	17.5	22	**FM10S71**	630	**FM10SNBR71**	630	**FM10SSSA**	630	**FM10SVITSSA**	630	37
	12	M 20×1.5	17.5	24	**FM12S71**	630	**FM12SNBR71**	630	**FM12SSSA**	630	**FM12SVITSSA**	630	39
	16	M 24×1.5	20.5	30	**FM16S71**	400	**FM16SNBR71**	400	**FM16SSSA**	400	**FM16SVITSSA**	400	72
	20	M 30×2.0	24.0	36	**FM20S71**	400	**FM20SNBR71**	400	**FM20SSSA**	400	**FM20SVITSSA**	400	121
	25	M 36×2.0	27.0	46	**FM25S71**	400	**FM25SNBR71**	400	**FM25SSSA**	400	**FM25SVITSSA**	400	221
	30	M 42×2.0	29.0	50	**FM30S71**	400	**FM30SNBR71**	400	**FM30SSSA**	400	**FM30SVITSSA**	400	248
	38	M 52×2.0	32.5	60	**FM38S71**	315	**FM38SNBR71**	315	**FM38SSSA**	315	**FM38SVITSSA**	315	367

$\frac{\text{PN (bar)}}{10}$ = PN (MPa)

EO2-FORM Set

for steel tubes

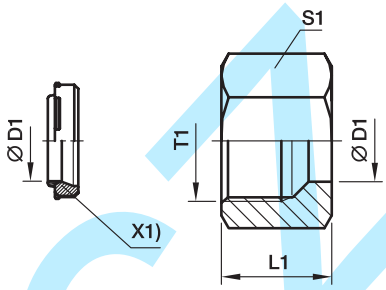

X1) Sealing (DOZ)

Series	D1	T1	L1	S1	Order code FORM…CF Steel, zinc plated Cr(VI) free +Seal NBR	Order code FORM…VITCF Steel, zinc plated Cr(VI) free +Seal FKM	PN (bar)	Weight g/1 piece
L	06	M 12×1.5	14.5	14	**FORM06LCF**	**FORM06LVITCF**	500	11
	08	M 14×1.5	14.5	17	**FORM08LCF**	**FORM08LVITCF**	500	16
	10	M 16×1.5	15.5	19	**FORM10LCF**	**FORM10LVITCF**	500	20
	12	M 18×1.5	15.5	22	**FORM12LCF**	**FORM12LVITCF**	400	27
	15	M 22×1.5	17.0	27	**FORM15LCF**	**FORM15LVITCF**	400	45
	18	M 26×1.5	18.0	32	**FORM18LCF**	**FORM18LVITCF**	400	67
	22	M 30×2.0	20.0	36	**FORM22LCF**	**FORM22LVITCF**	250	88
	28	M 36×2.0	21.0	41	**FORM28LCF**	**FORM28LVITCF**	250	99
	35	M 45×2.0	24.0	50	**FORM35LCF**	**FORM35LVITCF**	250	162
	42	M 52×2.0	24.0	60	**FORM42LCF**	**FORM42LVITCF**	250	233
S	06	M 14×1.5	16.5	17	**FORM06SCF**	**FORM06SVITCF**	800	19
	08	M 16×1.5	16.5	19	**FORM08SCF**	**FORM08SVITCF**	800	22
	10	M 18×1.5	17.5	22	**FORM10SCF**	**FORM10SVITCF**	800	34
	12	M 20×1.5	17.5	24	**FORM12SCF**	**FORM12SVITCF**	630	38
	16	M 24×1.5	20.5	30	**FORM16SCF**	**FORM16SVITCF**	630	71
	20	M 30×2.0	24.0	36	**FORM20SCF**	**FORM20SVITCF**	420	115
	25	M 36×2.0	27.0	46	**FORM25SCF**	**FORM25SVITCF**	420	216
	30	M 42×2.0	29.0	50	**FORM30SCF**	**FORM30SVITCF**	420	242
	38	M 52×2.0	32.5	60	**FORM38SCF**	**FORM38SVITCF**	420	366

KOVACI

EO2-FORM Set

for stainless steel tubes

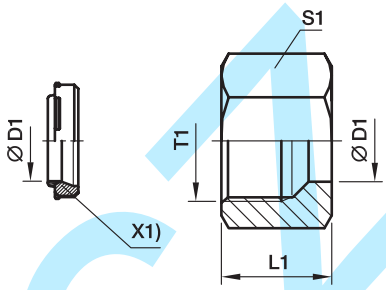

X1) Sealing (DOZ)

Series	D1	T1	L1	S1	Order code FORM…71 Stainless Steel Sealing FKM	FORM…NBR71 Stainless Steel Sealing NBR	FORM…CF Steel, zinc plated Cr(VI) free +Seal NBR	FORM…VITCF Steel, zinc Cr(VI) free +Seal FKM	PN (bar)	Weight g/1 piece
L	06	M 12×1.5	14.5	14	**FORM06L71**	**FORM06LNBR71**	**FORM06LCF**	**FORM06LVITCF**	315	11
	08	M 14×1.5	14.5	17	**FORM08L71**	**FORM08LNBR71**	**FORM08LCF**	**FORM08LVITCF**	315	16
	10	M 16×1.5	15.5	19	**FORM10L71**	**FORM10LNBR71**	**FORM10LCF**	**FORM10LVITCF**	315	21
	12	M 18×1.5	15.5	22	**FORM12L71**	**FORM12LNBR71**	**FORM12LCF**	**FORM12LVITCF**	315	27
	15	M 22×1.5	17.0	27	**FORM15L71**	**FORM15LNBR71**	**FORM15LCF**	**FORM15LVITCF**	315	46
	18	M 26×1.5	18.0	32	**FORM18L71**	**FORM18LNBR71**	**FORM18LCF**	**FORM18LVITCF**	315	68
	22	M 30×2.0	20.0	36	**FORM22L71**	**FORM22LNBR71**	**FORM22LCF**	**FORM22LVITCF**	160	89
	28	M 36×2.0	21.0	41	**FORM28L71**	**FORM28LNBR71**	**FORM28LCF**	**FORM28LVITCF**	160	101
	35	M 45×2.0	24.0	50	**FORM35L71**	**FORM35LNBR71**	**FORM35LCF**	**FORM35LVITCF**	160	165
	42	M 52×2.0	24.0	60	**FORM42L71**	**FORM42LNBR71**	**FORM42LCF**	**FORM42LVITCF**	160	237
S	06	M 14×1.5	16.5	17	**FORM06S71**	**FORM06SNBR71**	**FORM06SCF**	**FORM06SVITCF**	630	19
	08	M 16×1.5	16.5	19	**FORM08S71**	**FORM08SNBR71**	**FORM08SCF**	**FORM08SVITCF**	630	22
	10	M 18×1.5	17.5	22	**FORM10S71**	**FORM10SNBR71**	**FORM10SCF**	**FORM10SVITCF**	630	35
	12	M 20×1.5	17.5	24	**FORM12S71**	**FORM12SNBR71**	**FORM12SCF**	**FORM12SVITCF**	630	39
	16	M 24×1.5	20.5	30	**FORM16S71**	**FORM16SNBR71**	**FORM16SCF**	**FORM16SVITCF**	400	71
	20	M 30×2.0	24.0	36	**FORM20S71**	**FORM20SNBR71**	**FORM20SCF**	**FORM20SVITCF**	400	117
	25	M 36×2.0	27.0	46	**FORM25S71**	**FORM25SNBR71**	**FORM25SCF**	**FORM25SVITCF**	400	219
	30	M 42×2.0	29.0	50	**FORM30S71**	**FORM30SNBR71**	**FORM30SCF**	**FORM30SVITCF**	400	246
	38	M 52×2.0	32.5	60	**FORM38S71**	**FORM38SNBR71**	**FORM38SCF**	**FORM38SVITCF**	315	372

KOVCI

M Nut · EO 24° Cone end

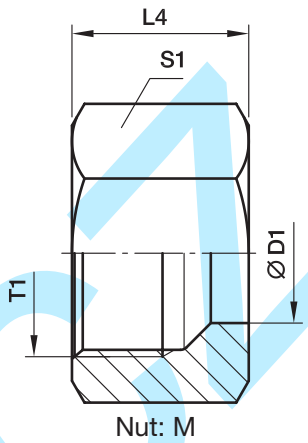

Series	D1	T1	L4	S1	Weight g/1 piece	Order code*	PN (bar)[1] CF	71	MS
LL[2])	04	M 08×1.0	11.0	10	4	**M04LL**	100	100	63
	06	M 10×1.0	11.5	12	6	**M06LL**	100	100	63
	08	M 12×1.0	12.0	14	7	**M08LL**	100	100	63
	10	M 14×1.0	12.5	17	11	**M10LL**	100	100	63
	12	M 16×1.0	13.0	19	13	**M12LL**	100	100	63
L[3])	06	M 12×1.5	14.5	14	10	**M06L**	500	315	200
	08	M 14×1.5	14.5	17	15	**M08L**	500	315	200
	10	M 16×1.5	15.5	19	18	**M10L**	500	315	200
	12	M 18×1.5	15.5	22	25	**M12L**	400	315	200
	15	M 22×1.5	17.0	27	42	**M15L**	400	315	200
	18	M 26×1.5	18.0	32	62	**M18L**	400	315	200
	22	M 30×2.0	20.0	36	82	**M22L**	250	160	100
	28	M 36×2.0	21.0	41	89	**M28L**	250	160	100
	35	M 45×2.0	24.0	50	137	**M35L**	250	160	100
	42	M 52×2.0	24.0	60	216	**M42L**	250	160	100
S[4])	06	M 14×1.5	16.5	17	17	**M06S**	800	630	400
	08	M 16×1.5	16.5	19	20	**M08S**	800	630	400
	10	M 18×1.5	17.5	22	31	**M10S**	800	630	400
	12	M 20×1.5	17.5	24	34	**M12S**	630	630	400
	16	M 24×1.5	20.5	30	66	**M16S**	630	400	250
	20	M 30×2.0	24.0	36	102	**M20S**	420	400	250
	25	M 36×2.0	27.0	46	202	**M25S**	420	400	250
	30	M 42×2.0	29.0	50	219	**M30S**	420	400	250
	38	M 52×2.0	32.5	60	339	**M38S**	420	315	200

[1]) Pressure shown = item deliverable

[2]) LL = very light series; [3]) L = light series; [4]) S = heavy series

$\frac{\text{PN (bar)}}{10}$ = PN (MPa)

*Please add the **suffixes** below according to the material/ surface required.

Order code suffixes		
Material	Suffix surface and material	Example
Steel, zinc plated, Cr(VI)-free	CFX	M16SCFX
Stainless Steel	EODURX	M16SEODURX
Brass	MSX	M16SMSX

D Cutting ring · PSR Progressive stop ring

for EO 24° cone end

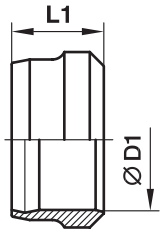

Cutting ring:
D

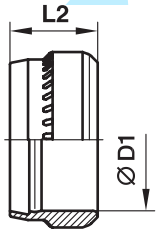

Progressive stop ring:
PSR

Series	D1	L1	Cutting ring D Order code: Steel, zinc plated Cr(VI) free	PN (bar)	Stainless Steel	PN (bar)	Brass	PN (bar)	Progressive stop ring PSR Order code: L2	Steel, zinc plated Cr(VI) free	PN (bar)	Weight g/1 pc.
LL	04	6.0	**D04LLX**	100	**D04LL71X**	100	**D04LLMSX**	63	–	–	–	0.3
	06	7.0	**D06LLX**	100	**D06LL71X**	100	**D06LLMSX**	63	–	–	–	0.8
	08	7.0	**D08LLX**	100	**D08LL71X**	100	**D08LLMSX**	63	–	–	–	1.0
	10	7.0	**D10LLX**	100	**D10LL71X**	100	**D10LLMSX**	63	–	–	–	1.3
	12	7.5	**D12LLX**	100	**D12LL71X**	100	**D12LLMSX**	63	–	–	–	1.6
L	06	9.5	–	–	–	–	**D06LMSX**	200	9.5	**PSR06LX**	500	1.7
	08	9.0	–	–	–	–	**D08LMSX**	200	9.5	**PSR08LX**	500	2.2
	10	10.0	–	–	–	–	**D10LMSX**	200	10.0	**PSR10LX**	500	3.1
	12	10.0	–	–	–	–	**D12LMSX**	200	10.0	**PSR12LX**	400	3.5
	15	10.0	–	–	–	–	**D15LMSX**	200	10.0	**PSR15LX**	400	4.5
	18	10.0	–	–	–	–	**D18LMSX**	200	10.0	**PSR18LX**	400	5.5
	22	10.5	–	–	–	–	**D22LMSX**	100	10.5	**PSR22LX**	250	7.3
	28	10.5	–	–	–	–	**D28LMSX**	100	10.5	**PSR28LX**	250	9.4
	35	13.0	–	–	–	–	**D35LMSX**	100	13.0	**PSR35LX**	250	20.0
	42	13.5	–	–	–	–	**D42LMSX**	100	13.0	**PSR42LX**	250	23.0
S	06	9.5	–	–	–	–	**D06LMSX**	400	9.5	**PSR06LX**	800	1.7
	08	9.0	–	–	–	–	**D08LMSX**	400	9.5	**PSR08LX**	800	3.2
	10	10.0	–	–	–	–	**D10LMSX**	400	10.0	**PSR10LX**	800	3.1
	12	10.0	–	–	–	–	**D12LMSX**	400	10.0	**PSR12LX**	630	3.5
	16	10.5	–	–	–	–	**D16SMSX**	250	10.0	**PSR16SX**	630	5.6
	20	12.5	–	–	–	–	**D20SMSX**	250	13.0	**PSR20SX**	420	11.4
	25	12.5	–	–	–	–	**D25SMSX**	250	13.0	**PSR25SX**	420	13.3
	30	13.0	–	–	–	–	**D30SMSX**	250	13.0	**PSR30SX**	420	19.3
	38	13.5	–	–	–	–	**D38SMSX**	200	13.0	**PSR38SX**	420	22.5

$\frac{\text{PN (bar)}}{10}$ = PN (MPa)

DPR Progressive ring

for EO 24° cone end

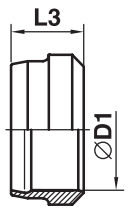

Progressive ring: DPR

Series	D1	L3	Progressive ring DPR Order code Stainless Steel	Stainless Steel SPH	PN (bar)	Weight g/1 piece
L	06	9.0	**DPR06L71X**	**DPR06LSPH71X**	315	1.7
	08	9.0	**DPR08L71X**	**DPR08LSPH71X**	315	2.2
	10	9.5	**DPR10L71X**	**DPR10LSPH71X**	315	3.1
	12	9.8	**DPR12L71X**	**DPR12LSPH71X**	315	3.5
	15	9.5	**DPR15L71X**	**DPR15LSPH71X**	315	4.5
	18	9.5	**DPR18L71X**	**DPR18LSPH71X**	315	5.5
	22	10.5	**DPR22L71X**	**DPR22LSPH71X**	160	7.3
	28	11.0	**DPR28L71X**	**DPR28LSPH71X**	160	9.4
	35	13.5	**DPR35L71X**	**DPR35LSPH71X**	160	20.0
	42	13.5	**DPR42L71X**	**DPR42LSPH71X**	160	23.0
S	06	9.0	**DPR06L71X**	**DPR06LSPH71X**	630	1.7
	08	9.0	**DPR08L71X**	**DPR08LSPH71X**	630	3.2
	10	9.5	**DPR10L71X**	**DPR10LSPH71X**	630	3.1
	12	9.8	**DPR12L71X**	**DPR12LSPH71X**	630	3.5
	16	9.5	**DPR16S71X**	**DPR16SSPH71X**	400	5.6
	20	12.5	**DPR20S71X**	**DPR20SSPH71X**	400	11.4
	25	12.5	**DPR25S71X**	**DPR25SSPH71X**	400	13.3
	30	12.5	**DPR30S71X**	**DPR30SSPH71X**	400	19.3
	38	13.0	**DPR38S71X**	**DPR38SSPH71X**	315	22.5

$\frac{\text{PN (bar)}}{10}$ = PN (MPa)

S Sleeve screw

for threaded ports according to DIN 3854

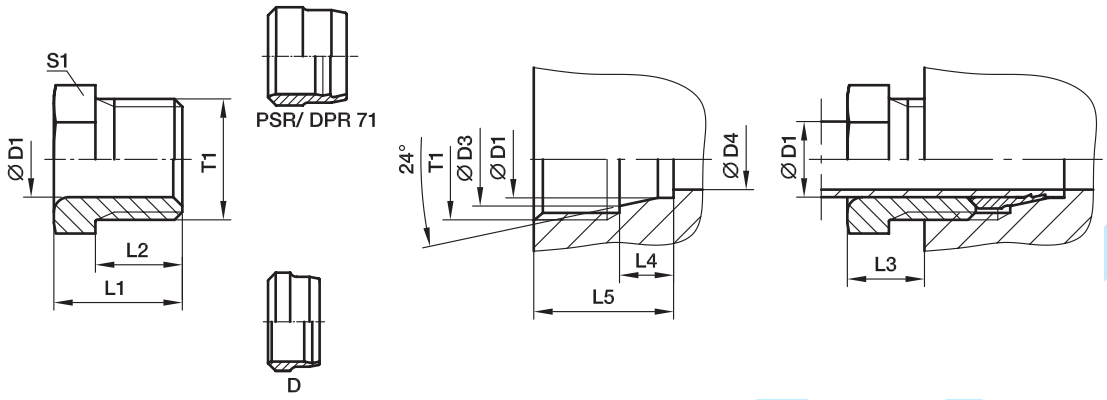

Series	D1	T1	D3	D4	L1	L2	L3	L4	L5	S1	Weight g/1 piece	Order code*	PN (bar)[1] CF	PN (bar)[1] 71
LL[2])	04	M 08×1.0	5.0	3.0	12	8.0	6	4.0	12.5	8	3	**S04LL**	100	100
	06	M 10×1.0	7.5	4.5	13	9.0	7	5.5	14.5	10	4	**S06LL**	100	100
	08	M 12×1.0	9.5	6.0	14	9.5	7	5.5	14.5	12	6	**S08LL**	100	100
L[3])	06	M 12×1.5	8.1	4.0	16	11.5	10	7.0	18.5	12	9	**S06L**	315	315
	08	M 14×1.5	10.1	6.0	16	11.5	10	7.0	18.5	14	11	**S08L**	315	315
	10	M 16×1.5	12.3	8.0	17	11.5	10	7.0	18.5	17	15	**S10L**	315	315
	12	M 18×1.5	14.3	10.0	18	12.0	10	7.0	19.0	19	19	**S12L**	315	315

[1]) Pressure shown = item deliverable

[2]) LL = very light series; [3]) L = light series

$\frac{\text{PN (bar)}}{10}$ = PN (MPa)

*Please add the **suffixes** below according to the material/ surface required.

Order code suffixes		
Material	Suffix surface and material	Example
Steel, zinc plated, Cr(VI)-free	CFX	S10LCFX
Stainless Steel	71X	S10L71X

kovaz

G Union

EO 24°cone end

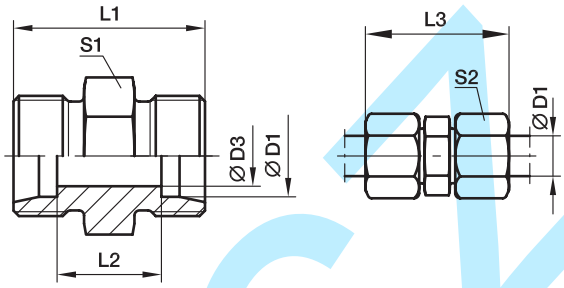

Series	D1	D3	L1	L2	L3	S1	S2	Weight g/1 piece	Order code*	PN (bar)[1] CF	71	MS
LL[2])	04	3.0	20	12	31	9	10	5	**G04LL**	100	100	63
	06	4.5	20	9	32	11	12	7	**G06LL**	100	100	63
	08	6.0	23	12	35	12	14	10	**G08LL**	100	100	63
	10	8.0	23	12	35	14	17	13	**G10LL**	100	100	63
	12	10.0	23	11	35	17	19	16	**G12LL**	100	100	63
L[3])	06	4.0	24	10	39	12	14	12	**G06L**	500	315	200
	08	6.0	25	11	40	14	17	16	**G08L**	500	315	200
	10	8.0	27	13	42	17	19	23	**G10L**	500	315	200
	12	10.0	28	14	43	19	22	28	**G12L**	400	315	200
	15	12.0	30	16	46	24	27	51	**G15L**	400	315	200
	18	15.0	31	16	48	27	32	69	**G18L**	400	315	200
	22	19.0	35	20	52	32	36	90	**G22L**	250	160	100
	28	24.0	36	21	54	41	41	137	**G28L**	250	160	100
	35	30.0	41	20	63	46	50	214	**G35L**	250	160	100
	42	36.0	43	21	66	55	60	296	**G42L**	250	160	100
S[4])	06	4.0	30	16	45	14	17	26	**G06S**	800	630	400
	08	5.0	32	18	47	17	19	37	**G08S**	800	630	400
	10	7.0	32	17	49	19	22	44	**G10S**	800	630	400
	12	8.0	34	19	51	22	24	60	**G12S**	630	630	400
	16	12.0	38	21	57	27	30	90	**G16S**	630	400	250
	20	16.0	44	23	66	32	36	143	**G20S**	420	400	250
	25	20.0	50	26	74	41	46	251	**G25S**	420	400	250
	30	25.0	54	27	80	46	50	330	**G30S**	420	400	250
	38	32.0	61	29	90	55	60	545	**G38S**	420	315	200

[1]) Pressure shown = item deliverable

[2]) LL = very light series; [3]) L = light series; [4]) S = heavy series

$\frac{\text{PN (bar)}}{10}$ = PN (MPa)

Delivery without nut and ring. Information on ordering complete fittings see page I7.

*Please add the **suffixes** below according to the material/ surface required.

Order code suffixes		
Material	Suffix surface and material	Example
Steel, zinc plated, Cr(VI)-free	CFX	G16SCFX
Stainless Steel	71X	G16S71X
Brass	MSX	G16SMSX

KOVOT.CZ

GR Straight reducer

EO 24° cone end

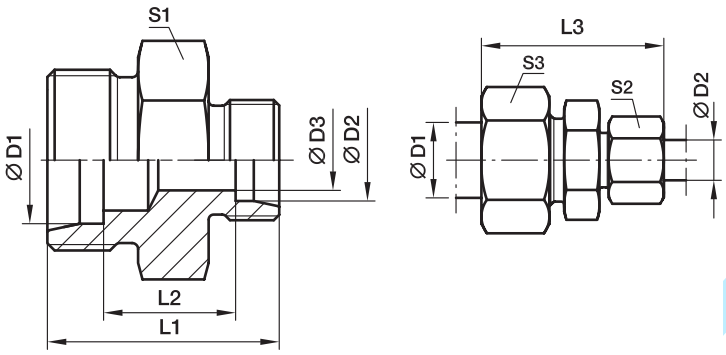

Series	D1	D2	D3	L1	L2	L3	S1	S2	S3	Weight g/1 piece	Order code*	PN (bar)[1] CF	71	MS
LL[2])	06	04	3.0	20	10.5	32	11	10	12	7	**GR06/04LL**	100	100	63
	08	04	3.0	22	12.5	34	12	10	14	9	**GR08/04LL**	100	100	63
	08	06	4.5	22	11.0	34	12	12	14	11	**GR08/06LL**	100	100	63
L[3])	08	06	4.0	25	11.0	40	14	14	17	16	**GR08/06L**	500	315	200
	10	06	4.0	26	12.0	41	17	14	19	21	**GR10/06L**	500	315	200
	10	08	6.0	26	12.0	41	17	17	19	21	**GR10/08L**	500	315	200
	12	06	4.0	27	13.0	42	19	14	22	26	**GR12/06L**	400	315	200
	12	08	6.0	27	13.0	42	19	17	22	26	**GR12/08L**	400	315	200
	12	10	8.0	28	14.0	43	19	19	22	29	**GR12/10L**	400	315	200
	15	10	8.0	29	15.0	45	24	19	27	46	**GR15/10L**	400	315	200
	15	12	10.0	29	15.0	45	24	22	27	45	**GR15/12L**	400	315	200
	18	10	8.0	30	15.5	46	27	19	32	65	**GR18/10L**	400	315	200
	18	12	10.0	30	15.5	46	27	22	32	64	**GR18/12L**	400	315	200
	18	15	12.0	31	16.5	48	27	27	32	65	**GR18/15L**	400	315	200
	22	12	10.0	32	17.5	48	32	22	36	80	**GR22/12L**	250	160	100
	22	15	12.0	33	18.5	50	32	27	36	89	**GR22/15L**	250	160	100
	22	18	15.0	33	18.0	50	32	32	36	89	**GR22/18L**	250	160	100
	28	18	15.0	34	19.0	52	41	32	41	142	**GR28/18L**	250	160	100
	28	22	19.0	36	21.0	54	41	36	41	139	**GR28/22L**	250	160	100
	35	22	19.0	39	21.0	59	46	36	50	202	**GR35/22L**	250	160	100
	35	28	24.0	39	21.0	59	46	41	50	206	**GR35/28L**	250	160	100
	42	35	30.0	43	21.5	66	55	50	60	330	**GR42/35L**	250	160	100
S[4])	08	06	4.0	32	18.0	47	17	17	19	35	**GR08/06S**	800	630	400
	10	06	4.0	32	17.5	48	19	17	22	41	**GR10/06S**	800	630	400
	10	08	5.0	32	17.5	48	19	19	22	42	**GR10/08S**	800	630	400
	12	06	4.0	34	19.5	50	22	17	24	56	**GR12/06S**	630	630	400
	12	08	5.0	34	19.5	50	22	19	24	57	**GR12/08S**	630	630	400
	12	10	7.0	34	19.0	51	22	22	24	59	**GR12/10S**	630	630	400
	16	10	7.0	36	20.0	54	27	22	30	80	**GR16/10S**	630	400	250
	16	12	8.0	36	20.0	54	27	24	30	87	**GR16/12S**	630	400	250
	16	14	10.0	36	21.5	57	27	27	30	79	**GR16/14S**	630	400	250
	20	10	7.0	40	22.0	60	32	22	36	129	**GR20/10S**	420	400	250
	20	12	8.0	40	22.0	60	32	24	36	131	**GR20/12S**	420	400	250
	20	16	12.0	42	23.0	63	32	30	36	134	**GR20/16S**	420	400	250
	25	16	12.0	46	25.5	68	41	30	46	236	**GR25/16S**	420	400	250
	25	20	16.0	48	25.5	71	41	36	46	235	**GR25/20S**	420	400	250
	30	20	16.0	50	26.0	74	46	36	50	299	**GR30/20S**	420	400	250
	30	25	20.0	52	26.5	77	46	46	50	317	**GR30/25S**	420	400	250
	38	30	25.0	59	29.5	87	55	50	60	522	**GR38/30S**	420	315	200

[1]) Pressure shown = item deliverable

[2]) LL = very light series; [3]) L = light series; [4]) S = heavy series

$\frac{\text{PN (bar)}}{10}$ = PN (MPa)

Delivery without nut and ring. Information on ordering complete fittings see page I7.

*Please add the **suffixes** below according to the material/surface required.

Order code suffixes		
Material	Suffix surface and material	Example
Steel, zinc plated, Cr(VI)-free	CFX	GR16/12SCFX
Stainless Steel	71X	GR16/12S71X
Brass	MSX	GR16/12SMSX

W Union elbow

EO 24° cone end

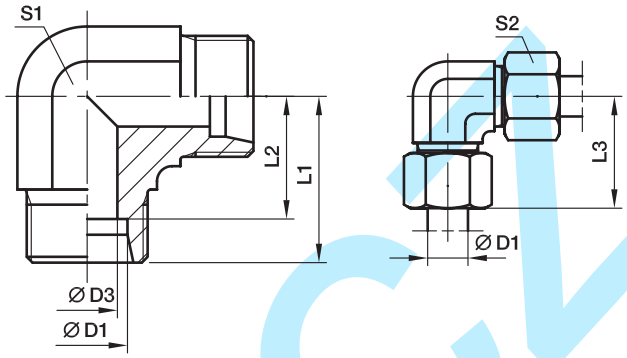

Series	D1	D3	L1	L2	L3	S1	S2	Weight g/1 piece	Order code*	PN (bar)[1] CF	71	MS
LL[2])	04	3.0	15	11.0	21	9	10	13	**W04LL**	100	100	63
	06	4.5	15	9.5	21	9	12	15	**W06LL**	100	100	63
	08	6.0	17	11.5	23	12	14	23	**W08LL**	100	100	63
	10	8.0	18	12.5	24	12	17	32	**W10LL**	100	100	63
	12	10.0	19	13.0	25	14	19	41	**W12LL**	100	100	63
L[3])	06	4.0	19	12.0	27	12	14	29	**W06L**	500	315	200
	08	6.0	21	14.0	29	12	17	43	**W08L**	500	315	200
	10	8.0	22	15.0	30	14	19	54	**W10L**	500	315	200
	12	10.0	24	17.0	32	19	22	80	**W12L**	400	315	200
	15	12.0	28	21.0	36	19	27	81	**W15L**	400	315	200
	18	15.0	31	23.5	40	24	32	140	**W18L**	400	315	200
	22	19.0	35	27.5	44	27	36	178	**W22L**	250	160	100
	28	24.0	38	30.5	47	36	41	340	**W28L**	250	160	100
	35	30.0	45	34.5	56	41	50	458	**W35L**	250	160	100
	42	36.0	51	40.0	63	50	60	776	**W42L**	250	160	100
S[4])	06	4.0	23	16.0	31	12	17	52	**W06S**	800	630	400
	08	5.0	24	17.0	32	14	19	74	**W08S**	800	630	400
	10	7.0	25	17.5	34	19	22	97	**W10S**	800	630	400
	12	8.0	29	21.5	38	19*	24	137	**W12S**	630	630	400
	16	12.0	33	24.5	43	24	30	162	**W16S**	630	400	250
	20	16.0	37	26.5	48	27	36	221	**W20S**	420	400	250
	25	20.0	42	30.0	54	36	46	424	**W25S**	420	400	250
	30	25.0	49	35.5	62	41	50	603	**W30S**	420	400	250
	38	32.0	57	41.0	72	50	60	1010	**W38S**	420	315	200

[1]) Pressure shown = item deliverable

[2]) LL = very light series; [3]) L = light series; [4]) S = heavy series

*S1 = 17 in 1.4571

$\frac{\text{PN (bar)}}{10}$ = PN (MPa)

Delivery without nut and ring. Information on ordering complete fittings see page I7.

*Please add the **suffixes** below according to the material/surface required.

Order code suffixes		
Material	Suffix surface and material	Example
Steel, zinc plated, Cr(VI)-free	CFX	W16SCFX
Stainless Steel	71X	W16S71X
Brass	MSX	W16SMSX

T Union tee

EO 24° cone end

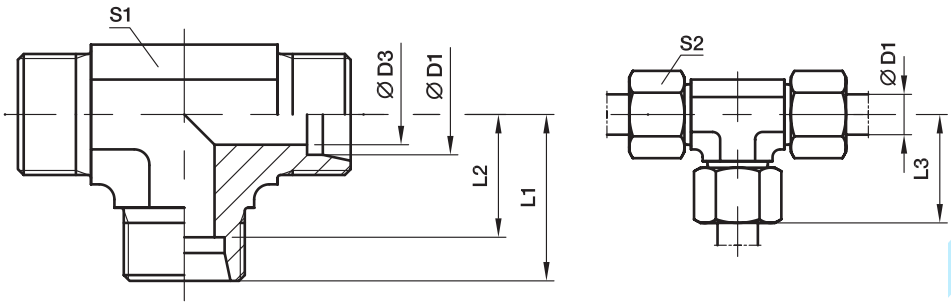

Series	D1	D3	L1	L2	L3	S1	S2	Weight g/1 piece	Order code*	PN (bar)[1] CF	71	MS
LL[2])	04	3.0	15	11.0	21	9	10	19	**T04LL**	100	100	63
	06	4.5	15	9.5	21	9	12	20	**T06LL**	100	100	63
	08	6.0	17	11.5	23	12	14	27	**T08LL**	100	100	63
	10	8.0	18	12.5	24	12	17	39	**T10LL**	100	100	63
	12	10.0	21	15.0	27	14	19	45	**T12LL**	100	100	63
L[3])	06	4.0	19	12.0	27	12	14	37	**T06L**	500	315	200
	08	6.0	21	14.0	29	12	17	53	**T08L**	500	315	200
	10	8.0	22	15.0	30	14	19	48	**T10L**	500	315	200
	12	10.0	24	17.0	32	17	22	65	**T12L**	400	315	200
	15	12.0	28	21.0	36	19	27	106	**T15L**	400	315	200
	18	15.0	31	23.5	40	24	32	179	**T18L**	400	315	200
	22	19.0	35	27.5	44	27	36	225	**T22L**	250	160	100
	28	24.0	38	30.5	47	36	41	396	**T28L**	250	160	100
	35	30.0	45	34.5	56	41	50	567	**T35L**	250	160	100
	42	36.0	51	40.0	63	50	60	905	**T42L**	250	160	100
S[4])	06	4.0	23	16.0	31	12	17	68	**T06S**	800	630	400
	08	5.0	24	17.0	32	14	19	70	**T08S**	800	630	400
	10	7.0	25	17.5	34	17	22	91	**T10S**	800	630	400
	12	8.0	29	21.5	38	19*	24	117	**T12S**	630	630	400
	16	12.0	33	24.5	43	24	30	202	**T16S**	630	400	250
	20	16.0	37	26.5	48	27	36	289	**T20S**	420	400	250
	25	20.0	42	30.0	54	36	46	545	**T25S**	420	400	250
	30	25.0	49	35.5	62	41	50	758	**T30S**	420	400	250
	38	32.0	57	41.0	72	50	60	1264	**T38S**	420	315	200

1) Pressure shown = item deliverable

2) LL = very light series; 3) L = light series; 4) S = heavy series

*S1 = 17 in 1.4571

$\frac{\text{PN (bar)}}{10}$ = PN (MPa)

Delivery without nut and ring. Information on ordering complete fittings see page I7.

*Please add the **suffixes** below according to the material/surface required.

Order code suffixes		
Material	Suffix surface and material	Example
Steel, zinc plated, Cr(VI)-free	CFX	T16SCFX
Stainless Steel	71X	T16S71X
Brass	MSX	T16SMSX

TR Tee Reducer

EO 24° cone end

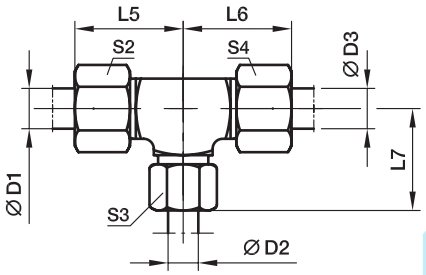

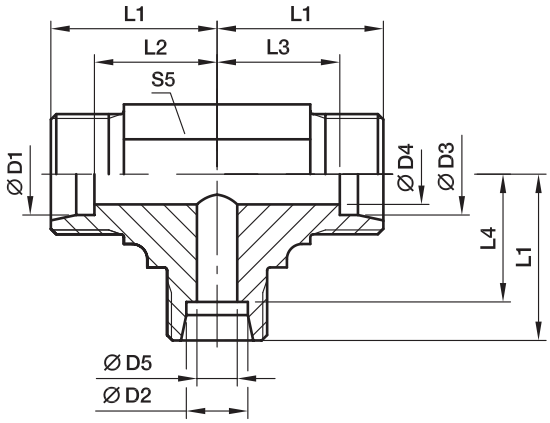

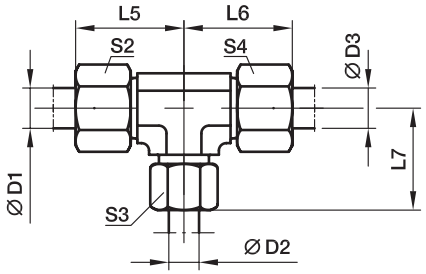

Series	D1	D2	D3	D4	D5	L1	L2	L3	L4	L5	L6	L7	S2	S3	S4	S5	Weight g/1 piece	Order code*	PN (bar)[1] CF	71	MS
LL[2]	04	08	04	3.0	6	17	13.0	13.0	11.5	23	23	23	10	14	10	12	27	**TR04/08/04LL**	100	100	63
	06	04	06	4.5	3	15	9.5	9.5	11.0	21	21	21	12	10	12	9	18	**TR06/04/06LL**	100	100	63
L[3]	06	08	06	4.0	6	21	14.0	14.0	14.0	29	29	29	14	17	14	12	54	**TR06/08/06L**	500	315	200
	08	06	08	6.0	4	21	14.0	14.0	14.0	29	29	29	17	14	17	12	53	**TR08/06/08L**	500	315	200
	06	10	06	4.0	8	22	15.0	15.0	15.0	30	30	30	14	19	14	14	53	**TR06/10/06L**	500	315	200
	08	10	08	6.0	8	22	15.0	15.0	15.0	30	30	30	17	19	17	14	50	**TR08/10/08L**	500	315	200
	10	06	10	8.0	4	22	15.0	15.0	15.0	30	30	30	19	14	19	14	46	**TR10/06/10L**	500	315	200
	10	08	10	8.0	6	22	15.0	15.0	15.0	30	30	30	19	17	19	14	43	**TR10/08/10L**	500	315	200
	10	10	06	4.0	8	22	15.0	15.0	15.0	30	30	30	19	19	14	14	49	**TR10/10/06L**	500	315	200
	08	12	08	6.0	10	24	17.0	17.0	17.0	32	32	32	17	22	17	17	67	**TR08/12/08L**	400	315	200
	12	06	12	10.0	4	24	17.0	17.0	17.0	32	32	32	22	14	22	17	66	**TR12/06/12L**	400	315	200
	12	08	08	6.0	6	24	17.0	17.0	17.0	32	32	32	22	17	17	17	66	**TR12/08/08L**	400	315	200
	12	08	12	10.0	6	24	17.0	17.0	17.0	32	32	32	22	17	22	17	68	**TR12/08/12L**	400	315	200
	12	10	10	8.0	8	24	17.0	17.0	17.0	32	32	32	22	19	19	17	67	**TR12/10/10L**	400	315	200
	12	10	12	10.0	8	24	17.0	17.0	17.0	32	32	32	22	19	22	17	67	**TR12/10/12L**	400	315	200
	12	12	10	8.0	10	24	17.0	17.0	17.0	32	32	32	22	22	19	17	64	**TR12/12/10L**	400	315	200
	10	15	10	8.0	12	28	21.0	21.0	21.0	36	36	36	19	27	19	19	105	**TR10/15/10L**	400	315	200
	12	15	12	10.0	12	28	21.0	21.0	21.0	36	36	36	22	27	22	19	102	**TR12/15/12L**	400	315	200
	15	06	15	12.0	4	28	21.0	21.0	21.0	36	36	36	27	14	27	19	107	**TR15/06/15L**	400	315	200
	15	10	15	12.0	8	28	21.0	21.0	21.0	36	36	36	27	19	27	19	105	**TR15/10/15L**	400	315	200
	15	12	12	10.0	10	28	21.0	21.0	21.0	36	36	36	27	22	22	19	101	**TR15/12/12L**	400	315	200
	15	12	15	12.0	10	28	21.0	21.0	21.0	36	36	36	27	22	27	19	105	**TR15/12/15L**	400	315	200
	15	15	12	10.0	12	28	21.0	21.0	21.0	36	36	36	27	27	22	19	103	**TR15/15/12L**	400	315	200
	12	18	12	10.0	15	31	24.0	24.0	23.5	39	39	40	22	32	22	24	177	**TR12/18/12L**	400	315	200
	18	10	10	8.0	8	31	23.5	24.0	24.0	40	39	39	32	19	19	24	173	**TR18/10/10L**	400	315	200
	18	10	18	15.0	8	31	23.5	23.5	24.0	40	40	39	32	19	32	24	182	**TR18/10/18L**	400	315	200
	18	12	18	15.0	10	31	23.5	23.5	24.0	40	40	39	32	22	32	24	174	**TR18/12/18L**	400	315	200

TR Tee Reducer

EO 24° cone end

Series	D1	D2	D3	D4	D5	L1	L2	L3	L4	L5	L6	L7	S2	S3	S4	S5	Weight g/1 piece	Order code*	PN (bar)[1] CF	71	MS
L[3]	18	15	18	15.0	12	31	23.5	23.5	24.0	40	40	39	32	27	32	24	179	**TR18/15/18L**	400	315	200
	18	18	10	8.0	15	31	23.5	24.0	23.5	40	39	40	32	32	19	24	171	**TR18/18/10L**	400	315	200
	22	10	22	19.0	8	35	27.5	27.5	28.0	44	44	43	36	19	36	27	232	**TR22/10/22L**	250	160	100
	22	12	22	19.0	10	35	27.5	27.5	28.0	44	44	43	36	22	36	27	229	**TR22/12/22L**	250	160	100
	22	15	15	12.0	12	35	27.5	28.0	28.0	44	43	43	36	27	27	27	240	**TR22/15/15L**	250	160	100
	22	15	22	19.0	12	35	27.5	27.5	28.0	44	44	43	36	27	36	27	233	**TR22/15/22L**	250	160	100
	22	18	18	15.0	15	35	27.5	27.5	27.5	44	44	44	36	32	32	27	236	**TR22/18/18L**	250	160	100
	22	18	22	19.0	15	35	27.5	27.5	27.5	44	44	44	36	32	36	27	239	**TR22/18/22L**	250	160	100
	22	22	18	15.0	19	35	27.5	27.5	27.5	44	44	44	36	36	32	27	228	**TR22/22/18L**	250	160	100
	28	10	28	24.0	8	38	30.5	30.5	31.0	47	47	46	41	19	41	36	412	**TR28/10/28L**	250	160	100
	28	12	28	24.0	10	38	30.5	30.5	31.0	47	47	46	41	22	41	36	408	**TR28/12/28L**	250	160	100
	28	15	28	24.0	12	38	30.5	30.5	31.0	47	47	46	41	27	41	36	423	**TR28/15/28L**	250	160	100
	28	18	28	24.0	15	38	30.5	30.5	30.5	47	47	47	41	32	41	36	421	**TR28/18/28L**	250	160	100
	28	22	22	19.0	19	38	30.5	30.5	30.5	47	47	47	41	36	36	36	412	**TR28/22/22L**	250	160	100
	28	22	28	24.0	19	38	30.5	30.5	30.5	47	47	47	41	36	41	36	415	**TR28/22/28L**	250	160	100
S[4]	10	06	10	7.0	4	25	17.5	17.5	18.0	34	34	33	22	17	22	17	103	**TR10/06/10S**	800	630	400
	12	08	08	5.0	5	29	21.5	22.0	22.0	38	37	37	24	19	19	19*	107	**TR12/08/08S**	630	630	400
	12	08	12	8.0	5	29	21.5	21.5	22.0	38	38	37	24	19	24	19*	105	**TR12/08/12S**	630	630	400
	12	10	12	8.0	7	29	21.5	21.5	21.5	38	38	38	24	22	24	19*	114	**TR12/10/12S**	630	630	400
	12	16	12	8.0	12	33	25.5	25.5	24.5	42	42	43	24	30	24	24	190	**TR12/16/12S**	630	400	250
	16	06	16	12.0	4	33	24.5	24.5	26.0	43	43	41	30	17	30	24	176	**TR16/06/16S**	630	400	250
	16	08	16	12.0	5	33	24.5	24.5	26.0	43	43	41	30	19	30	24	208	**TR16/08/16S**	630	400	250
	16	10	16	12.0	7	33	24.5	24.5	25.5	43	43	42	30	22	30	24	210	**TR16/10/16S**	630	400	250
	16	12	16	12.0	8	33	24.5	24.5	25.5	43	43	42	30	24	30	24	386	**TR16/12/16S**	630	400	250
	16	20	16	12.0	16	37	28.5	28.5	26.5	47	47	48	30	36	30	27	296	**TR16/20/16S**	420	400	250
	20	10	20	16.0	7	37	26.5	26.5	29.5	48	48	46	36	22	36	27	553	**TR20/10/20S**	420	400	250
	20	12	20	16.0	8	37	26.5	26.5	29.5	48	48	46	36	24	36	27	306	**TR20/12/20S**	420	400	250
	20	16	20	16.0	12	37	26.5	26.5	28.5	48	48	47	36	30	36	27	285	**TR20/16/20S**	420	400	250
	20	25	20	16.0	20	42	31.5	31.5	30.0	53	53	54	36	46	36	36	544	**TR20/25/20S**	420	400	250
	25	16	25	20.0	12	42	30.0	30.0	33.5	54	54	52	46	30	46	36	556	**TR25/16/25S**	420	400	250
	25	20	25	20.0	16	42	30.0	30.0	31.5	54	54	53	46	36	46	36	544	**TR25/20/25S**	420	400	250
	25	30	25	20.0	25	49	37.0	37.0	35.5	61	61	62	46	50	46	41	791	**TR25/30/25S**	420	400	250

[1]) Pressure shown = item deliverable

[2]) LL = very light series; [3]) L = light series; [4]) S = heavy series

*S5 = 17 in 1.4571

$\frac{\text{PN (bar)}}{10}$ = PN (MPa)

Delivery without nut and ring. Information on ordering complete fittings see page I7.

*Please add the **suffixes** below according to the material/surface required.

Order code suffixes		
Material	Suffix surface and material	Example
Steel, zinc plated, Cr(VI)-free	CFX	TR16/12/16SCFX
Stainless Steel	71X	TR16/12/16S71X
Brass	MSX	TR16/12/16SMSX

KOVOVÝ

K Union cross

EO 24° cone end

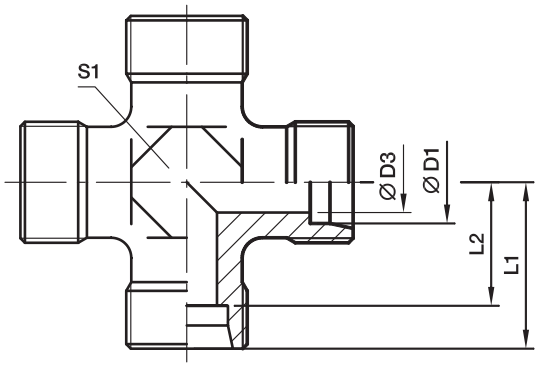

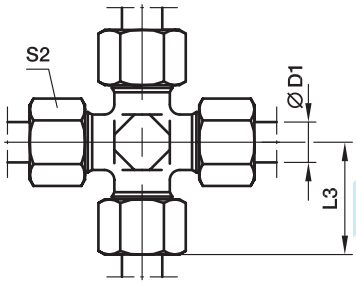

Series	D1	D3	L1	L2	L3	S1	S2	Weight g/1 piece	Order code*	PN (bar)[1] CF	71	MS
LL[2])	04	3.0	15	11.0	21	9	10	13	**K04LL**	100	100	63
	06	4.5	15	9.5	21	9	12	14	**K06LL**	100	100	63
	08	6.0	17	11.5	23	12	14	24	**K08LL**	100	100	63
L[3])	06	4.0	19	12.0	27	12	14	35	**K06L**	315	315	200
	08	6.0	21	14.0	29	12	17	40	**K08L**	315	315	200
	10	8.0	22	15.0	30	14	19	52	**K10L**	315	315	200
	12	10.0	24	17.0	32	17	22	69	**K12L**	315	315	200
	15	12.0	28	21.0	36	19	27	130	**K15L**	315	315	200
	18	15.0	31	23.5	40	24	32	188	**K18L**	315	315	200
	22	19.0	35	27.5	44	27	36	251	**K22L**	160	160	100
	28	24.0	38	30.5	47	36	41	392	**K28L**	160	160	100
	35	30.0	45	34.5	56	41	50	618	**K35L**	160	160	100
	42	36.0	51	40.0	63	50	60	905	**K42L**	160	160	100
S[4])	06	4.0	23	16.0	31	12	17	58	**K06S**	630	630	400
	08	5.0	24	17.0	32	14	19	82	**K08S**	630	630	400
	10	7.0	25	17.5	34	17	22	97	**K10S**	630	630	400
	12	8.0	29	21.5	38	17	24	146	**K12S**	630	630	400
	16	12.0	33	24.5	43	24	30	220	**K16S**	400	400	250
	20	16.0	37	26.5	48	27	36	339	**K20S**	315	315	200
	25	20.0	42	30.0	54	36	46	576	**K25S**	315	315	200
	30	25.0	49	35.5	62	41	50	843	**K30S**	315	315	200
	38	32.0	57	41.0	72	50	60	1350	**K38S**	315	315	200

[1]) Pressure shown = item deliverable

[2]) LL = very light series; [3]) L = light series; [4]) S = heavy series

$\frac{\text{PN (bar)}}{10}$ = PN (MPa)

Delivery without nut and ring. Information on ordering complete fittings see page I7.

*Please add the **suffixes** below according to the material/surface required.

Order code suffixes		
Material	Suffix surface and material	Example
Steel, zinc plated, Cr(VI)-free	CFX	K16SCFX
Stainless Steel	71X	K16S71X
Brass	MSX	K16SMSX

SV Bulkhead union

EO 24° cone end

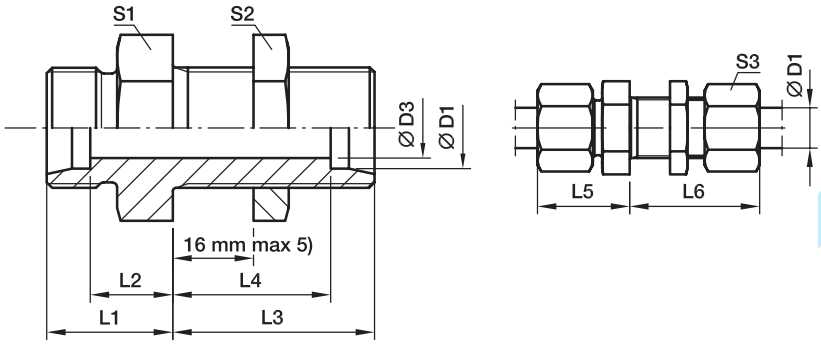

Series	D1	D3	L1	L2	L3	L4	L5	L6	S1	S2	S3	Weight g/1 piece	Order code*	PN (bar)[1] CF	71	MS
L[3])	06	4	14	7.0	34	27.0	22	42	17	17	14	39	**SV06LOMD**	500	315	200
	08	6	15	8.0	34	27.0	23	42	19	19	17	50	**SV08LOMD**	500	315	200
	10	8	17	10.0	35	28.0	25	43	22	22	19	67	**SV10LOMD**	500	315	200
	12	10	17	10.0	36	29.0	25	44	24	24	22	78	**SV12LOMD**	400	315	200
	15	12	19	12.0	38	31.0	27	46	27	30	27	128	**SV15LOMD**	400	315	200
	18	15	21	13.5	40	32.5	30	49	32	36	32	198	**SV18LOMD**	400	315	200
	22	19	24	16.5	42	34.5	33	51	36	41	36	254	**SV22LOMD**	250	160	100
	28	24	26	18.5	43	35.5	35	52	41	46	41	335	**SV28LOMD**	250	160	100
	35	30	29	18.5	47	36.5	40	58	50	55	50	546	**SV35LOMD**	250	160	160
	42	36	30	19.0	47	36.0	42	59	60	65	60	758	**SV42LOMD**	250	160	160
S[4])	06	4	19	12.0	36	29.0	27	44	19	19	17	65	**SV06SOMD**	800	630	400
	08	5	20	13.0	36	29.0	28	44	22	22	19	87	**SV08SOMD**	800	630	400
	10	7	22	14.5	37	29.5	31	46	24	24	22	112	**SV10SOMD**	800	630	400
	12	8	22	14.5	38	30.5	31	47	27	27	24	141	**SV12SOMD**	630	630	400
	16	12	25	16.5	40	31.5	35	50	32	32	30	201	**SV16SOMD**	630	400	250
	20	16	28	17.5	44	33.5	39	55	41	41	36	462	**SV20SOMD**	420	400	250
	25	20	32	20.0	47	35.0	44	59	46	46	46	492	**SV25SOMD**	420	400	250
	30	25	35	21.5	51	37.5	48	64	50	50	50	631	**SV30SOMD**	420	400	250
	38	32	38	22.0	53	37.0	53	68	65	65	60	1083	**SV38SOMD**	420	315	

[1]) Pressure shown = item deliverable

[3]) L = light series; [4]) S = heavy series

[5]) Bulkhead thickness min.
06–18 L and 06–16 S = 3 mm
22–42 L and 20–38 S = 4 mm

$\frac{\text{PN (bar)}}{10}$ = PN (MPa)

Delivery without nut and ring. Information on ordering complete fittings see page I7.

*Please add the **suffixes** below according to the material/surface required.

Order code suffixes		
Material	Suffix surface and material	Example
Steel, zinc plated, Cr(VI)-free	CF	SV16SOMDCF
Stainless Steel	71	SV16SOMD71
Brass	MS	SV16SOMDMS

WSV Bulkhead elbow

EO 24° cone end

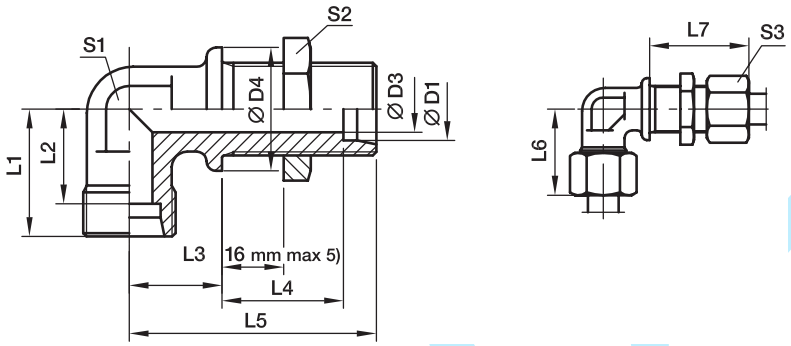

Series	D1	D3	D4	L1	L2	L3	L4	L5	L6	L7	S1	S2	S3	Weight g/1 piece	Order code*	PN (bar)[1] CF	71	MS
L[3])	06	4	17	19	12.0	14	27.0	48	27	42	12	17	14	51	**WSV06LOMD**	315	315	200
	08	6	19	21	14.0	17	27.0	51	29	42	12	19	17	61	**WSV08LOMD**	315	315	200
	10	8	22	22	15.0	18	28.0	53	30	43	14	22	19	78	**WSV10LOMD**	315	315	200
	12	10	24	24	17.0	20	29.0	56	32	44	17	24	22	85	**WSV12LOMD**	315	315	200
	15	12	27	28	21.0	23	31.0	61	36	46	19	30	27	150	**WSV15LOMD**	315	315	200
	18	15	32	31	23.5	24	32.5	64	40	49	24	36	32	238	**WSV18LOMD**	315	315	200
	22	19	36	35	27.5	30	34.5	72	44	51	27	41	36	327	**WSV22LOMD**	160	160	
	28	24	42	38	30.5	34	35.5	77	47	52	36	46	41	482	**WSV28LOMD**	160	160	
	35	30	50	45	34.5	39	36.5	86	56	58	41	55	50	729	**WSV35LOMD**	160	160	
	42	36	60	51	40.0	43	36.0	90	63	59	50	65	60	1091	**WSV42LOMD**	160	160	
S[4])	06	4	19	23	16.0	17	29.0	53	31	44	12	19	17	72	**WSV06SOMD**	630	630	
	08	5	22	24	17.0	18	29.0	54	32	44	14	22	19	99	**WSV08SOMD**	630	630	
	10	7	24	25	17.5	20	29.5	57	34	46	17	24	22	128	**WSV10SOMD**	630	630	
	12	8	27	29	21.5	21	30.5	59	38	47	17	27	24	168	**WSV12SOMD**	630	630	
	16	12	30	33	24.5	24	31.5	64	43	50	24	32	30	249	**WSV16SOMD**	400	400	
	20	16	36	37	26.5	30	33.5	74	48	55	27	41	36	390	**WSV20SOMD**	400	400	
	25	20	42	42	30.0	34	35.0	81	54	59	36	46	46	618	**WSV25SOMD**	400	400	
	30	25	50	49	35.5	39	37.5	90	62	64	41	50	50	889	**WSV30SOMD**	400	400	
	38	32	60	57	41.0	43	37.0	96	72	68	50	65	60	1337	**WSV38SOMD**	315	315	

[1]) Pressure shown = item deliverable

[3]) L = light series; [4]) S = heavy series

[5]) Bulkhead thickness min.
06-18 L and 06–16 S = 3 mm
22-42 L and 20–38 S = 4 mm

$\frac{\text{PN (bar)}}{10}$ = PN (MPa)

Delivery without nut and ring. Information on ordering complete fittings see page I7.

*Please add the **suffixes** below according to the material/surface required.

Order code suffixes		
Material	Suffix surface and material	Example
Steel, zinc plated, Cr(VI)-free	CF	WSV16SOMDCF
Stainless Steel	71	WSV16SOMD71
Brass	MS	WSV18LOMDMS

EW Swivel nut elbow

EO 24° cone end / EO 24° DKO swivel

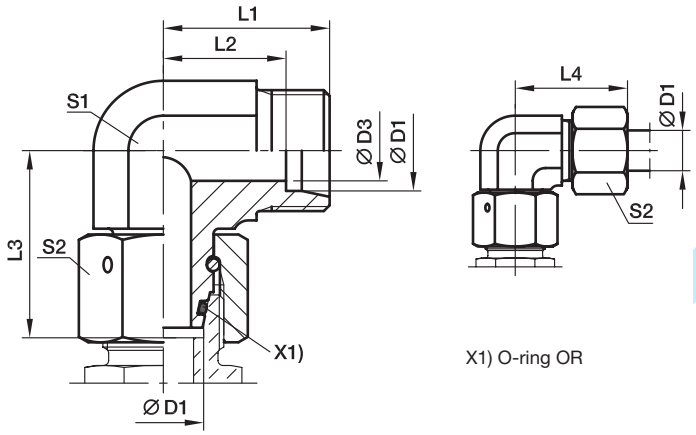

X1) O-ring OR

Series	D1	D3	L1	L2	L3	L4	S1	S2	Weight g/1 piece	Order code*	PN (bar)[1] CF	PN (bar)[1] 71
L[3])	06	4	19	12.0	26.0	27	12	14	34	**EW06LOMD**	500	315
	08	6	21	14.0	27.5	29	12	17	43	**EW08LOMD**	500	315
	10	8	22	15.0	29.0	30	14	19	58	**EW10LOMD**	500	315
	12	10	24	17.0	29.5	32	17	22	81	**EW12LOMD**	400	315
	15	12	28	21.0	32.5	36	19	27	128	**EW15LOMD**	400	315
	18	15	31	23.5	35.5	40	24	32	197	**EW18LOMD**	400	315
	22	19	35	27.5	38.5	44	27	36	258	**EW22LOMD**	250	160
	28	24	38	30.5	41.5	47	36	41	370	**EW28LOMD**	250	160
	35	30	45	34.5	51.0	56	41	50	593	**EW35LOMD**	250	160
	42	36	51	40.0	56.0	63	50	60	993	**EW42LOMD**	250	160
S[4])	06	4	23	16.0	27.0	31	12	17	48	**EW06SOMD**	800	630
	08	5	24	17.0	27.5	32	14	19	65	**EW08SOMD**	800	630
	10	6	25	17.5	30.0	34	17	22	92	**EW10SOMD**	800	630
	12	8	29	21.5	31.0	38	17	24	107	**EW12SOMD**	630	630
	16	12	33	24.5	36.5	43	24	30	212	**EW16SOMD**	630	400
	20	16	37	26.5	44.5	48	27	36	309	**EW20SOMD**	420	400
	25	20	42	30.0	50.0	54	36	46	547	**EW25SOMD**	420	400
	30	25	49	35.5	55.0	62	41	50	744	**EW30SOMD**	420	400
	38	32	57	41.0	63.0	72	50	60	1222	**EW38SOMD**	420	315

[1]) Pressure shown = item deliverable

[3]) L = light series; [4]) S = heavy series

$\frac{\text{PN (bar)}}{10}$ = PN (MPa)

Delivery without nut and ring. Information on ordering complete fittings or alternative sealing materials see page I7.

*Please add the **suffixes** below according to the material/surface required.

Order code suffixes			
Material	Suffix surface and material	Example	Standard sealing material (no additonal. suffix needed)
Steel, zinc plated, Cr(VI)-free	CF	EW16SOMDCF	NBR
Stainless Steel	71	EW16SOMD71	VIT

EV Swivel nut 45° elbow

EO 24° cone end / EO 24° DKO swivel

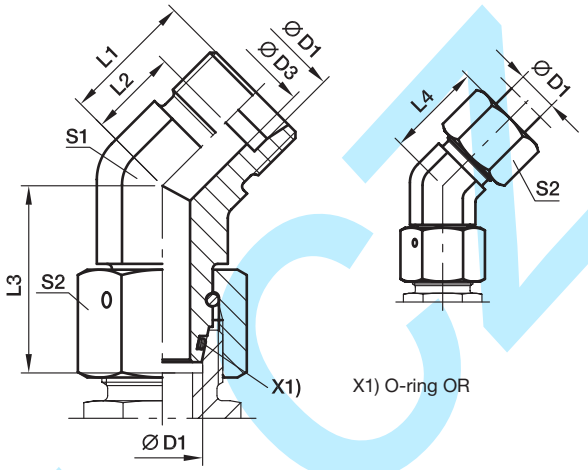

Series	D1	D3	L1	L2	L3	L4	S1	S2	Weight g/1 piece	Order code*	PN (bar)[1] CF	PN (bar)[1] 71
L[3]	06	4	16.0	9.0	26.0	24	14	14	37	**EV06LOMD**	315	315
	08	6	19.0	12.0	27.5	27	14	17	49	**EV08LOMD**	315	315
	10	8	19.0	12.0	29.0	27	19	19	77	**EV10LOMD**	315	315
	12	10	21.0	14.0	29.5	29	19	22	86	**EV12LOMD**	315	315
	15	12	24.0	17.0	32.5	32	22	27	144	**EV15LOMD**	315	315
	18	15	24.0	16.5	35.5	33	27	32	210	**EV18LOMD**	315	315
	22	19	26.0	18.5	38.5	35	30	36	270	**EV22LOMD**	160	160
	28	24	30.5	23.0	41.5	40	36	41	385	**EV28LOMD**	160	160
	35	30	37.0	26.5	51.0	48	50	50	805	**EV35LOMD**	160	160
	42	36	37.0	26.0	56.0	49	50	60	887	**EV42LOMD**	160	160
S[4]	06	4	16.0	9.0	27.0	24	14	17	50	**EV06SOMD**	630	630
	08	5	19.0	12.0	27.5	27	19	19	80	**EV08SOMD**	630	630
	10	7	21.0	13.5	30.0	30	19	22	95	**EV10SOMD**	630	630
	12	8	24.0	16.5	31.0	33	22	24	137	**EV12SOMD**	630	630
	16	12	24.0	15.5	36.5	34	27	30	217	**EV16SOMD**	400	400
	20	16	26.5	16.0	44.5	38	30	36	313	**EV20SOMD**	400	400
	25	20	30.5	18.5	50.0	43	36	46	529	**EV25SOMD**	400	400
	30	25	37.0	23.5	55.0	50	50	50	940	**EV30SOMD**	400	400
	38	32	37.0	21.0	63.0	52	50	60	1055	**EV38SOMD**	315	315

[1]) Pressure shown = item deliverable

[3]) L = light series; [4]) S = heavy series

$\frac{\text{PN (bar)}}{10}$ = PN (MPa)

Delivery without nut and ring. Information on ordering complete fittings or alternative sealing materials see page I7.

*Please add the **suffixes** below according to the material/surface required.

Order code suffixes			
Material	Suffix surface and material	Example	Standard sealing material (no additonal. suffix needed)
Steel, zinc plated, Cr(VI)-free	CF	EV16SOMDCF	NBR
Stainless Steel	71	EV16SOMD71	VIT

ET Swivel nut branch tee

EO 24° cone end / EO 24° DKO swivel

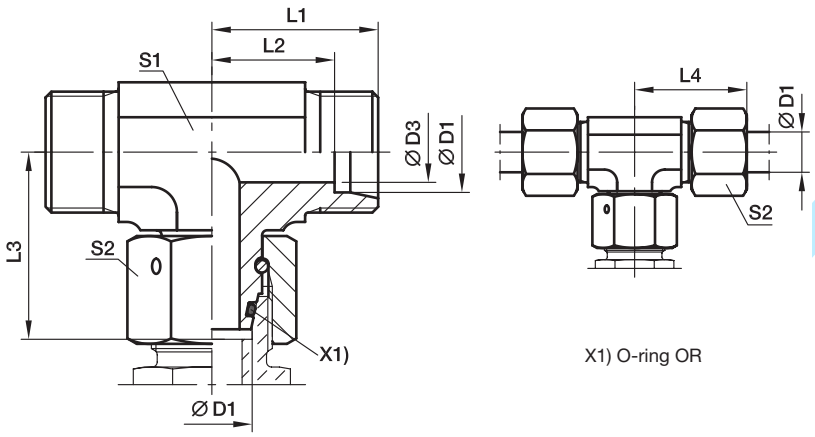

X1) O-ring OR

Series	D1	D3	L1	L2	L3	L4	S1	S2	Weight g/1 piece	Order code*	PN (bar)[1] CF	PN (bar)[1] 71
L[3]	06	4	19	12.0	26.0	27	12	14	42	**ET06LOMD**	500	315
	08	6	21	14.0	27.5	29	12	17	53	**ET08LOMD**	500	315
	10	8	22	15.0	29.0	30	14	19	71	**ET10LOMD**	500	315
	12	10	24	17.0	29.5	32	17	22	97	**ET12LOMD**	400	315
	15	12	28	21.0	32.5	36	19	27	159	**ET15LOMD**	400	315
	18	15	31	23.5	35.5	40	24	32	239	**ET18LOMD**	400	315
	22	19	35	27.5	38.5	44	27	36	308	**ET22LOMD**	250	160
	28	24	38	30.5	41.5	47	36	41	449	**ET28LOMD**	250	160
	35	30	45	34.5	51.0	56	41	50	679	**ET35LOMD**	250	160
	42	36	51	40.0	56.0	63	50	60	1131	**ET42LOMD**	250	160
S[4]	06	4	23	16.0	27.0	31	12	17	63	**ET06SOMD**	800	630
	08	5	24	17.0	27.5	32	14	19	79	**ET08SOMD**	800	630
	10	6	25	17.5	30.0	34	17	22	113	**ET10SOMD**	800	630
	12	8	29	21.5	31.0	38	17	24	136	**ET12SOMD**	630	630
	16	12	33	24.5	36.5	43	24	30	239	**ET16SOMD**	630	400
	20	16	37	26.5	44.5	48	27	36	388	**ET20SOMD**	420	400
	25	20	42	30.0	50.0	54	36	46	652	**ET25SOMD**	420	400
	30	25	49	35.5	55.0	62	41	50	905	**ET30SOMD**	420	400
	38	32	57	41.0	63.0	72	50	60	1462	**ET38SOMD**	420	315

[1]) Pressure shown = item deliverable

[3]) L = light series; [4]) S = heavy series

$\frac{\text{PN (bar)}}{10}$ = PN (MPa)

Delivery without nut and ring. Information on ordering complete fittings or alternative sealing materials see page I7.

*Please add the **suffixes** below according to the material/surface required.

Order code suffixes			
Material	Suffix surface and material	Example	Standard sealing material (no additonal. suffix needed)
Steel, zinc plated, Cr(VI)-free	CF	ET16SOMDCF	NBR
Stainless Steel	71	ET16SOMD71	VIT

EL Swivel nut run tee

EO 24° cone end / EO 24° DKO swivel

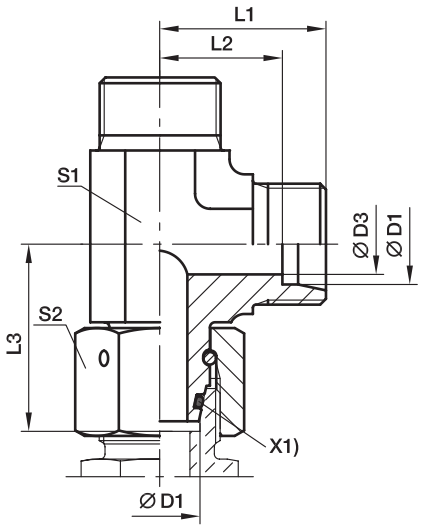

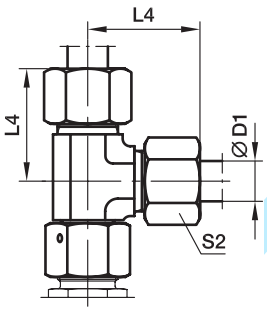

X1) O-ring OR

Series	D1	D3	L1	L2	L3	L4	S1	S2	Weight g/1 piece	Order code*	PN (bar)[1] CF	PN (bar)[1] 71
L[3])	06	4	19	12.0	26.0	27	12	14	44	**EL06LOMD**	500	315
	08	6	21	14.0	27.5	29	12	17	53	**EL08LOMD**	500	315
	10	8	22	15.0	29.0	30	14	19	68	**EL10LOMD**	500	315
	12	10	24	17.0	29.5	32	17	22	95	**EL12LOMD**	400	315
	15	12	28	21.0	32.5	36	19	27	151	**EL15LOMD**	400	315
	18	15	31	23.5	35.5	40	24	32	233	**EL18LOMD**	400	315
	22	19	35	27.5	38.5	44	27	36	309	**EL22LOMD**	250	160
	28	24	38	30.5	41.5	47	36	41	436	**EL28LOMD**	250	160
	35	30	45	34.5	51.0	56	41	50	666	**EL35LOMD**	250	160
	42	36	51	40.0	56.0	63	50	60	1163	**EL42LOMD**	250	160
S[4])	06	4	23	16.0	27.0	31	12	17	65	**EL06SOMD**	800	630
	08	5	24	17.0	27.5	32	14	19	84	**EL08SOMD**	800	630
	10	6	25	17.5	30.0	34	17	22	118	**EL10SOMD**	800	630
	12	8	29	21.5	31.0	38	17	24	136	**EL12SOMD**	630	630
	16	12	33	24.5	36.5	43	24	30	260	**EL16SOMD**	630	400
	20	16	37	26.5	44.5	48	27	36	375	**EL20SOMD**	420	400
	25	20	42	30.0	50.0	54	36	46	655	**EL25SOMD**	420	400
	30	25	49	35.5	55.0	62	41	50	906	**EL30SOMD**	420	400
	38	32	57	41.0	63.0	72	50	60	1472	**EL38SOMD**	420	315

[1]) Pressure shown = item deliverable

[3]) L = light series; [4]) S = heavy series

$\frac{\text{PN (bar)}}{10}$ = PN (MPa)

Delivery without nut and ring. Information on ordering complete fittings or alternative sealing materials see page I7.

*Please add the **suffixes** below according to the material/surface required.

Order code suffixes			
Material	Suffix surface and material	Example	Standard sealing material (no additonal. suffix needed)
Steel, zinc plated, Cr(VI)-free	CF	EL16SOMDCF	NBR
Stainless Steel	71	EL16SOMD71	VIT

EVW Standpipe elbow

EO 24° cone end / EO stand pipe adjustable

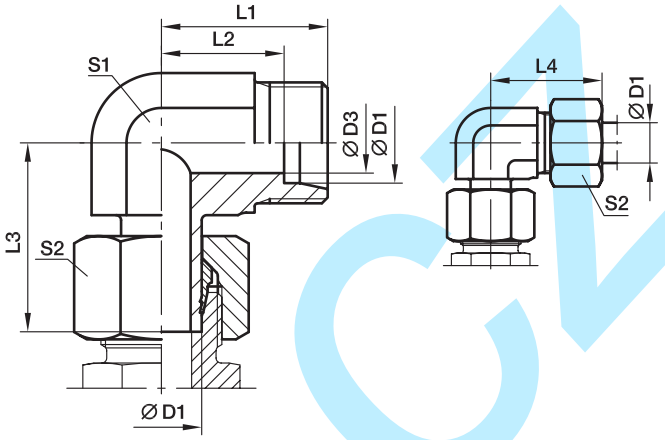

With pre-assembled nut and progressive ring for connection.
Final assembly (in appropriate body) at least 1/4 turn beyond the point of clearly perceptible resistance.

Series	D1	D3	L1	L2	L3	L4	S1	S2	Weight g/1 piece	Order code*	PN (bar)[1] CF	71	MS
L[3]	06	4	19	12.0	26.0	27	12	14	32	**EVW06LOMD**	315	315	200
	08	6	21	14.0	27.5	29	12	17	40	**EVW08LOMD**	315	315	200
	10	8	22	15.0	29.0	30	14	19	54	**EVW10LOMD**	315	315	200
	12	10	24	17.0	29.5	32	17	22	76	**EVW12LOMD**	315	315	200
	15	12	28	21.0	32.5	36	19	27	119	**EVW15LOMD**	315	315	200
	18	15	31	23.5	35.5	40	24	32	192	**EVW18LOMD**	315	315	200
	22	19	35	27.5	38.5	44	27	36	355	**EVW22LOMD**	160	160	100
	28	24	38	30.5	42.0	47	36	41	514	**EVW28LOMD**	160	160	100
	35	30	45	34.5	51.0	56	41	50	536	**EVW35LOMD**	160	160	100
	42	36	51	40.0	60.0	63	50	60	977	**EVW42LOMD**	160	160	100
S[4]	06	4	23	16.0	27.0	31	12	17	44	**EVW06SOMD**	630	630	400
	08	5	24	17.0	27.5	32	14	19	63	**EVW08SOMD**	630	630	400
	10	7	25	17.5	31.0	34	17	22	95	**EVW10SOMD**	630	630	400
	12	8	29	21.5	31.0	38	17	24	110	**EVW12SOMD**	630	630	400
	16	12	33	24.5	37.5	43	24	30	211	**EVW16SOMD**	400	400	250
	20	16	37	26.5	44.5	48	27	36	306	**EVW20SOMD**	400	400	250
	25	20	42	30.0	50.0	54	36	46	558	**EVW25SOMD**	400	400	250
	30	25	49	35.5	55.0	62	41	50	724	**EVW30SOMD**	400	400	250
	38	32	57	41.0	66.5	72	50	60	1307	**EVW38SOMD**	315	315	200

[1]) Pressure shown = item deliverable
[3]) L = light series; [4]) S = heavy series

$\frac{\text{PN (bar)}}{10}$ = PN (MPa)

The use of the swivel nut fitting EW is to be prefered (see page I27).

Delivery without nut and ring. Information on ordering complete fittings see page I7.

Order code suffixes		
Material	Suffix surface and material	Example
Steel, zinc plated, Cr(VI)-free	CF	EVW16SOMDCF
Stainless Steel	71	EVW16SOMD71
Brass	MS	EVW16SOMDMS

*Please add the **suffixes** below according to the material/surface required.

EVT Standpipe branch tee

EO 24° cone end / EO stand pipe adjustable

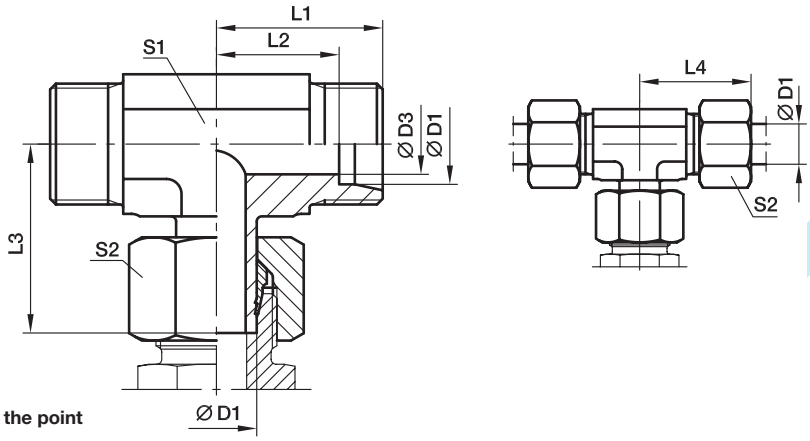

With pre-assembled nut and progressive ring for connection.
Final assembly (in appropriate body) at least 1/4 turn beyond the point of clearly perceptible resistance.

Series	D1	D3	L1	L2	L3	L4	S1	S2	Weight g/1 piece	Order code*	PN (bar)[1] CF	71	MS
L[3]	06	4	19	12.0	26.0	27	12	14	37	**EVT06LOMD**	315	315	200
	08	6	21	14.0	27.5	29	12	17	49	**EVT08LOMD**	315	315	200
	10	8	22	15.0	29.0	30	14	19	66	**EVT10LOMD**	315	315	200
	12	10	24	17.0	30.5	32	17	22	93	**EVT12LOMD**	315	315	200
	15	12	28	21.0	32.5	36	19	27	146	**EVT15LOMD**	315	315	200
	18	15	31	23.5	35.5	40	24	32	201	**EVT18LOMD**	315	315	200
	22	19	35	27.5	38.5	44	27	36	274	**EVT22LOMD**	160	160	
	28	24	38	30.5	43.5	47	36	41	441	**EVT28LOMD**	160	160	
	35	30	45	34.5	54.5	56	41	50	633	**EVT35LOMD**	160	160	
	42	36	51	40.0	60.0	63	50	60	1129	**EVT42LOMD**	160	160	
S[4]	06	4	23	16.0	27.0	31	12	17	61	**EVT06SOMD**	630	630	
	08	5	24	17.0	29.0	32	14	19	44	**EVT08SOMD**	630	630	
	10	7	25	17.5	31.0	34	17	22	84	**EVT10SOMD**	630	630	
	12	8	29	21.5	33.0	38	17	24	131	**EVT12SOMD**	630	630	
	16	12	33	24.5	37.5	43	24	30	240	**EVT16SOMD**	400	400	
	20	16	37	26.5	44.5	48	27	36	345	**EVT20SOMD**	400	400	
	25	20	42	30.0	50.5	54	36	46	647	**EVT25SOMD**	400	400	
	30	25	49	35.5	56.5	62	41	50	873	**EVT30SOMD**	400	400	
	38	32	57	41.0	66.5	72	50	60	1361	**EVT38SOMD**	315	315	

[1]) Pressure shown = item deliverable
[3]) L = light series; [4]) S = heavy series

$\frac{\text{PN (bar)}}{10}$ = PN (MPa)

The use of the swivel nut fitting ET is to be prefered (see page I29).

Delivery without nut and ring. Information on ordering complete fittings see page I7.

*Please add the **suffixes** below according to the material/surface required.

Order code suffixes		
Material	Suffix surface and material	Example
Steel, zinc plated, Cr(VI)-free	CF	EVT16SOMDCF
Stainless Steel	71	EVT16SOMD71
Brass	MS	EVT18LOMDMS

EVL standpipe run tee

EO 24° cone end / EO stand pipe adjustable

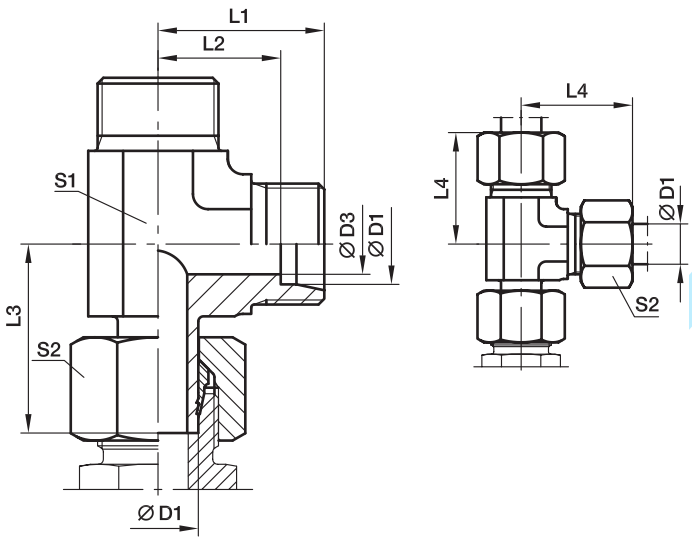

With pre-assembled nut and progressive ring for connection.
Final assembly (in appropriate body) at least 1/4 turn beyond the point of clearly perceptible resistance.

Series	D1	D3	L1	L2	L3	L4	S1	S2	Weight g/1 piece	Order code*	PN (bar)[1] CF	71	MS
L[3]	06	4	19	12.0	26.0	27	12	14	40	**EVL06LOMD**	315	315	200
	08	6	21	14.0	27.5	29	12	17	50	**EVL08LOMD**	315	315	200
	10	8	22	15.0	29.0	30	14	19	64	**EVL10LOMD**	315	315	200
	12	10	24	17.0	30.5	32	17	22	93	**EVL12LOMD**	315	315	200
	15	12	28	21.0	32.5	36	19	27	147	**EVL15LOMD**	315	315	200
	18	15	31	23.5	35.5	40	24	32	229	**EVL18LOMD**	315	315	200
	22	19	35	27.5	39.0	44	27	36	296	**EVL22LOMD**	160	160	
	28	24	38	30.5	43.5	47	36	41	416	**EVL28LOMD**	160	160	
	35	30	45	34.5	54.5	56	41	50	661	**EVL35LOMD**	160	160	
	42	36	51	40.0	60.0	63	50	60	1105	**EVL42LOMD**	160	160	
S[4]	06	4	23	16.0	27.0	31	12	17	57	**EVL06SOMD**	630	630	
	08	5	24	17.0	29.0	32	14	19	84	**EVL08SOMD**	630	630	
	10	7	25	17.5	32.0	34	17	22	116	**EVL10SOMD**	630	630	
	12	8	29	21.5	33.0	38	17	24	137	**EVL12SOMD**	630	630	
	16	12	33	24.5	37.5	43	24	30	259	**EVL16SOMD**	400	400	
	20	16	37	26.5	44.5	48	27	36	371	**EVL20SOMD**	400	400	
	25	20	42	30.0	50.5	54	36	46	647	**EVL25SOMD**	400	400	
	30	25	49	35.5	56.5	62	41	50	906	**EVL30SOMD**	400	400	
	38	32	57	41.0	66.5	72	50	60	1549	**EVL38SOMD**	315	315	

[1]) Pressure shown = item deliverable
[3]) L = light series; [4]) S = heavy series

$\frac{\text{PN (bar)}}{10}$ = PN (MPa)

The use of the swivel nut fitting EL is to be prefered (see page I30).

Delivery without nut and ring. Information on ordering complete fittings see page I7.

Order code suffixes		
Material	Suffix surface and material	Example
Steel, zinc plated, Cr(VI)-free	CF	EVL16SOMDCF
Stainless Steel	71	EVL16SOMD71
Brass	MS	EVL18LOMDMS

*Please add the **suffixes** below according to the material/surface required.

DA Distance piece adapter

EO 24° DKO swivel / EO 24° cone end

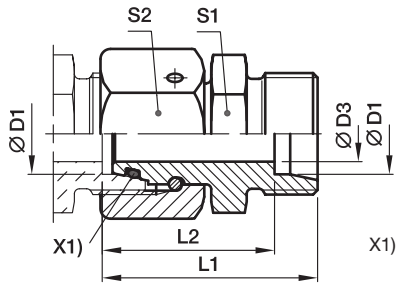

X1) O-ring OR

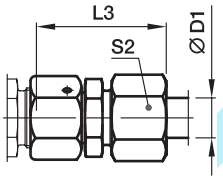

Series	D1	D3	L1	L2	L3	S1	S2	Weight g/1 piece	Order code*	PN (bar)[1] CF	71	MS
L[3]	06	2,5	43.0	36	51	12	14	33	**DA06LOMD**	500	315	200
	08	4.0	43.0	36	51	14	17	46	**DA08LOMD**	500	315	200
	10	6.0	43.0	36	51	17	19	60	**DA10LOMD**	500	315	200
	12	8.0	43.0	36	51	19	22	75	**DA12LOMD**	400	315	200
	15	10.0	43.0	36	51	24	27	118	**DA15LOMD**	400	315	200
	18	13.0	43.5	36	52	27	32	153	**DA18LOMD**	400	315	200
	22	17.0	47.5	40	56	32	36	210	**DA22LOMD**	250	160	100
	28	22.0	47.5	40	57	41	41	279	**DA28LOMD**	250	160	100
	35	28.0	60.5	50	72	46	50	468	**DA35LOMD**	250	160	100
	42	34.0	71.0	60	83	55	60	802	**DA42LOMD**	250	160	100
S[4]	06	2.5	43.0	36	51	14	17	48	**DA06SOMD**	800	630	400
	08	4.0	43.0	36	51	17	19	64	**DA08SOMD**	800	630	400
	10	6.0	43.5	36	52	19	22	81	**DA10SOMD**	800	630	400
	12	8.0	43.5	36	52	22	24	97	**DA12SOMD**	630	630	400
	16	11.0	48.5	40	58	27	30	166	**DA16SOMD**	630	400	250
	20	14.0	56.5	46	68	32	36	265	**DA20SOMD**	420	400	250
	25	18.0	62.0	50	74	41	46	466	**DA25SOMD**	420	400	250
	30	23.0	69.5	56	83	46	50	601	**DA30SOMD**	420	400	250
	38	30.0	76.0	60	91	55	60	871	**DA38SOMD**	420	315	200

[1]) Pressure shown = item deliverable

[3]) L = light series; [4]) S = heavy series

$\frac{\text{PN (bar)}}{10}$ = PN (MPa)

Delivery without nut and ring. Information on ordering complete fittings or alternative sealing materials see page I7.

Order code suffixes			
Material	Suffix surface and material	Example	Standard sealing material (no additonal. suffix needed)
Steel, zinc plated, Cr(VI)-free	CF	DA16SOMDCF	NBR
Stainless Steel	71	DA16SOMD71	VIT
Brass	MS	DA16SOMDMS	NBR

*Please add the **suffixes** below according to the material/surface required.

RED Tube end reducer

EO 24° DKO swivel / EO 24° cone end

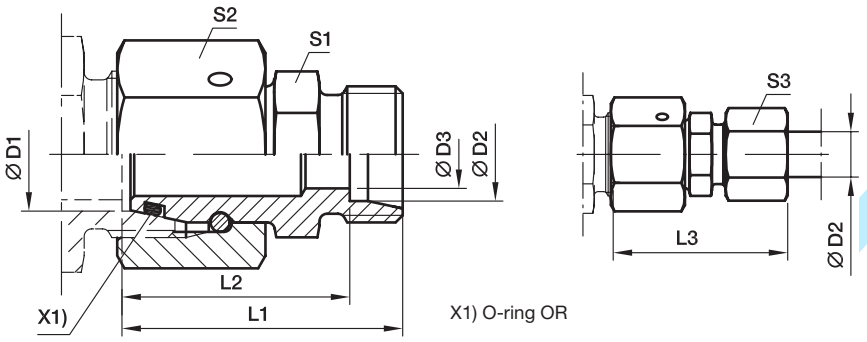

Series 2) 3) 4)	D1	D2	D3	L1	L2	L3	S1	S2	S3	Weight g/1 piece	Order code*	PN (bar)1) CF	PN (bar)1) 71
L/LL	06	04	2.5	28.5	24.5	34.0	9	14	10	17	**RED06L/04LLOMD**	100	100
L	08	06	4.0	30.5	23.5	38.0	12	17	14	29	**RED08/06LOMD**	500	315
L	10	06	4.0	32.0	25.0	40.0	14	19	14	36	**RED10/06LOMD**	500	315
L	10	08	6.0	32.0	25.0	40.0	14	19	17	38	**RED10/08LOMD**	500	315
L	12	06	4.0	32.0	25.0	40.0	17	22	14	49	**RED12/06LOMD**	400	315
L	12	08	6.0	32.0	25.0	40.0	17	22	17	49	**RED12/08LOMD**	400	315
L	12	10	8.0	33.0	26.0	41.0	17	22	19	51	**RED12/10LOMD**	400	315
L	15	06	4.0	35.5	28.5	43.0	19	27	14	81	**RED15/06LOMD**	400	315
L	15	08	6.0	35.5	28.5	43.0	19	27	17	85	**RED15/08LOMD**	400	315
L	15	10	8.0	36.5	29.5	44.0	19	27	19	83	**RED15/10LOMD**	400	315
L	15	12	10.0	36.5	29.5	44.0	19	27	22	83	**RED15/12LOMD**	400	315
L	18	06	4.0	35.0	28.0	43.0	24	32	14	109	**RED18/06LOMD**	400	315
L	18	08	6.0	35.0	28.0	43.0	24	32	17	111	**RED18/08LOMD**	400	315
L	18	10	8.0	36.0	29.0	44.0	24	32	19	110	**RED18/10LOMD**	400	315
L	18	12	10.0	36.0	29.0	44.0	24	32	22	110	**RED18/12LOMD**	400	315
L	18	15	12.0	37.0	30.0	45.0	24	32	27	115	**RED18/15LOMD**	400	315
L/S	18	16	12.0	40.0	31.5	49.5	27	32	30	138	**RED18L/16SOMD**	400	315
L	22	06	4.0	39.0	32.0	47.0	27	36	14	158	**RED22/06LOMD**	250	160
L	22	08	6.0	39.0	32.0	47.0	27	36	17	158	**RED22/08LOMD**	250	160
L	22	10	8.0	40.0	33.0	48.0	27	36	19	159	**RED22/10LOMD**	250	160
L	22	12	10.0	40.0	33.0	48.0	27	36	22	157	**RED22/12LOMD**	250	160
L	22	15	12.0	41.0	34.0	49.0	27	36	27	164	**RED22/15LOMD**	250	160
L/S	22	16	12.0	43.0	34.5	52.5	27	36	30	173	**RED22L/16SOMD**	250	160
L	22	18	15.0	41.0	33.5	50.0	27	36	32	167	**RED22/18LOMD**	250	160
L/S	22	20	16.0	45.0	34.5	56.0	32	36	36	203	**RED22L/20SOMD**	250	160
L	28	06	4.0	41.0	34.0	49.0	32	41	14	219	**RED28/06LOMD**	250	160
L	28	08	6.0	41.0	34.0	49.0	32	41	17	221	**RED28/08LOMD**	250	160
L	28	10	8.0	42.0	35.0	50.0	32	41	19	213	**RED28/10LOMD**	250	160
L	28	12	10.0	42.0	35.0	50.0	32	41	22	213	**RED28/12LOMD**	250	160
L	28	15	12.0	43.0	36.0	51.0	32	41	27	218	**RED28/15LOMD**	250	160
L/S	28	16	12.0	45.0	36.5	54.5	32	41	30	227	**RED28L/16SOMD**	250	160
L	28	18	15.0	43.0	35.5	52.0	32	41	32	220	**RED28/18LOMD**	250	160
L	28	22	19.0	45.0	37.5	54.0	32	41	36	222	**RED28/22LOMD**	250	160
L/S	28	25	20.0	50.0	38.0	62.0	41	41	46	300	**RED28L/25SOMD**	250	160
L	35	06	4.0	44.0	37.0	52.0	41	50	14	318	**RED35/06LOMD**	250	160
L	35	08	6.0	44.0	37.0	52.0	41	50	17	318	**RED35/08LOMD**	250	160
L	35	10	8.0	45.0	38.0	53.0	41	50	19	318	**RED35/10LOMD**	250	160
L	35	12	10.0	45.0	38.0	53.0	41	50	22	324	**RED35/12LOMD**	250	160
L	35	15	12.0	46.0	39.0	54.0	41	50	27	328	**RED35/15LOMD**	250	160
L	35	18	15.0	46.0	38.5	55.0	41	50	32	328	**RED35/18LOMD**	250	160
L	35	22	19.0	48.0	40.5	57.0	41	50	36	331	**RED35/22LOMD**	250	160

RED Tube end reducer

EO 24° DKO swivel / EO 24° cone end

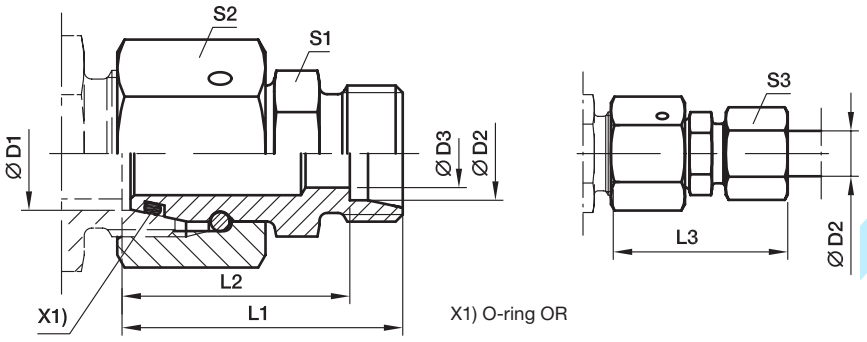

X1) O-ring OR

Series [2) 3) 4)]	D1	D2	D3	L1	L2	L3	S1	S2	S3	Weight g/1 piece	Order code*	PN (bar)[1)] CF	PN (bar)[1)] 71
L/S	35	25	20.0	52.0	40.0	64.0	41	50	46	366	**RED35L/25SOMD**	250	160
L	35	28	24.0	48.0	40.5	57.0	41	50	41	327	**RED35/28LOMD**	250	160
L/S	35	30	25.0	55.0	41.5	68.0	46	50	50	435	**RED35L/30SOMD**	250	160
L	42	10	8.0	48.5	41.5	56.0	50	60	19	537	**RED42/10LOMD**	250	160
L	42	12	10.0	48.5	41.5	56.0	50	60	22	538	**RED42/12LOMD**	250	160
L	42	15	12.0	49.5	42.5	58.0	50	60	27	534	**RED42/15LOMD**	250	160
L	42	18	15.0	49.5	42.0	58.0	50	60	32	544	**RED42/18LOMD**	250	160
L	42	22	19.0	51.5	44.0	60.0	50	60	36	543	**RED42/22LOMD**	250	160
L	42	28	24.0	51.5	44.0	61.0	50	60	41	539	**RED42/28LOMD**	250	160
L/S	42	30	25.0	57.5	44.0	70.5	50	60	50	588	**RED42L/30SOMD**	250	160
L	42	35	30.0	53.5	43.0	65.0	50	60	50	541	**RED42/35LOMD**	250	160
L/S	42	38	32.0	61.5	45.5	76.0	55	60	60	701	**RED42L/38SOMD**	250	160

[1)] Pressure shown = item deliverable

[2)] LL = very light series; [3)] L = light series; [4)] S = heavy series

$\frac{\text{PN (bar)}}{10}$ = PN (MPa)

Delivery without nut and ring. Information on ordering complete fittings or alternative sealing materials see page I7.

*Please add the **suffixes** below according to the material/surface required.

Order code suffixes			
Material	Suffix surface and material	Example	Standard sealing material (no additonal. suffix needed)
Steel, zinc plated, Cr(VI)-free	CF	RED18/15LOMDCF	NBR
Stainless Steel	71	RED18/15LOMD71	VIT

RED Tube end reducer

EO 24° DKO swivel / EO 24° cone end

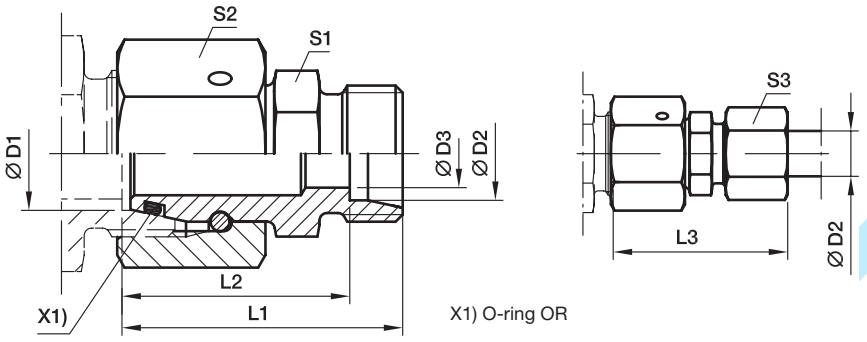

Series 3) 4)	D1	D2	D3	L1	L2	L3	S1	S2	S3	Weight g/1 piece	Order code*	PN (bar)1) CF	PN (bar)1) 71
S	08	06	4	34.0	27.0	42	14	19	17	42	**RED08/06SOMD**	800	630
S	10	06	4	34.5	27.5	42	17	22	17	55	**RED10/06SOMD**	800	630
S	10	08	5	34.5	27.5	42	17	22	19	58	**RED10/08SOMD**	800	630
S	12	06	4	36.0	29.0	44	17	24	17	66	**RED12/06SOMD**	630	630
S	12	08	5	36.0	29.0	44	17	24	19	68	**RED12/08SOMD**	630	630
S	12	10	7	37.0	29.5	46	19	24	22	75	**RED12/10SOMD**	630	630
S	16	06	4	39.0	32.0	47	22	30	17	112	**RED16/06SOMD**	630	400
S	16	08	5	39.0	32.0	47	22	30	19	114	**RED16/08SOMD**	630	400
S	16	10	7	39.0	31.5	48	22	30	22	115	**RED16/10SOMD**	630	400
S	16	12	8	39.0	31.5	48	22	30	24	118	**RED16/12SOMD**	630	400
S/L	16	15	11	39.0	32.0	47	24	30	27	120	**RED16S/15LOMD**	400	315
S	20	06	4	43.0	36.0	51	27	36	17	172	**RED20/06SOMD**	420	400
S	20	08	5	43.0	36.0	51	27	36	19	174	**RED20/08SOMD**	420	400
S	20	10	7	43.0	35.5	52	27	36	22	174	**RED20/10SOMD**	420	400
S	20	12	8	43.0	35.5	52	27	36	24	177	**RED20/12SOMD**	420	400
S/L	20	15	12	43.0	36.0	51	27	36	27	173	**RED20S/15LOMD**	400	315
S	20	16	12	45.0	36.5	55	27	36	30	182	**RED20/16SOMD**	420	400
S/L	20	18	14	43.0	35.5	51	27	36	32	178	**RED20S/18LOMD**	400	315
S	25	06	4	45.5	38.5	53	32	46	17	294	**RED25/06SOMD**	420	400
S	25	08	5	45.5	38.5	53	32	46	19	295	**RED25/08SOMD**	420	400
S	25	10	7	45.5	38.0	54	32	46	22	296	**RED25/10SOMD**	420	400
S	25	12	8	45.5	38.0	54	32	46	24	299	**RED25/12SOMD**	420	400
S	25	16	12	47.5	39.0	57	32	46	30	304	**RED25/16SOMD**	420	400
S/L	25	18	15	45.5	38.0	54	32	46	32	299	**RED25S/18LOMD**	400	315
S	25	20	16	49.5	39.0	61	32	46	36	315	**RED25/20SOMD**	420	400
S/L	25	22	18	47.5	40.0	56	32	46	36	304	**RED25S/22LOMD**	250	160
S	30	06	4	51.0	44.0	59	41	50	17	412	**RED30/06SOMD**	420	400
S	30	08	5	51.0	44.0	59	41	50	19	404	**RED30/08SOMD**	420	400
S	30	10	7	51.0	43.5	60	41	50	22	405	**RED30/10SOMD**	420	400
S	30	12	8	51.0	43.5	60	41	50	24	405	**RED30/12SOMD**	420	400
S	30	16	12	53.0	44.5	63	41	50	30	412	**RED30/16SOMD**	420	400
S	30	20	16	55.0	44.5	66	41	50	36	421	**RED30/20SOMD**	420	400
S/L	30	22	19	53.0	45.5	61	41	50	36	406	**RED30S/22LOMD**	250	160
S	30	25	20	57.0	45.0	69	41	50	46	439	**RED30/25SOMD**	420	400
S/L	30	28	23	53.0	45.5	62	41	50	41	406	**RED30S/28LOMD**	250	160
S	38	06	4	54.5	47.5	62	50	60	17	556	**RED38/06SOMD**	420	315
S	38	08	5	54.5	47.5	62	50	60	19	581	**RED38/08SOMD**	420	315
S	38	10	7	54.5	47.0	63	50	60	22	579	**RED38/10SOMD**	420	315
S	38	12	8	54.5	47.0	63	50	60	24	577	**RED38/12SOMD**	420	315
S	38	16	12	56.5	48.0	66	50	60	30	580	**RED38/16SOMD**	420	315

RED Tube end reducer

EO 24° DKO swivel / EO 24° cone end

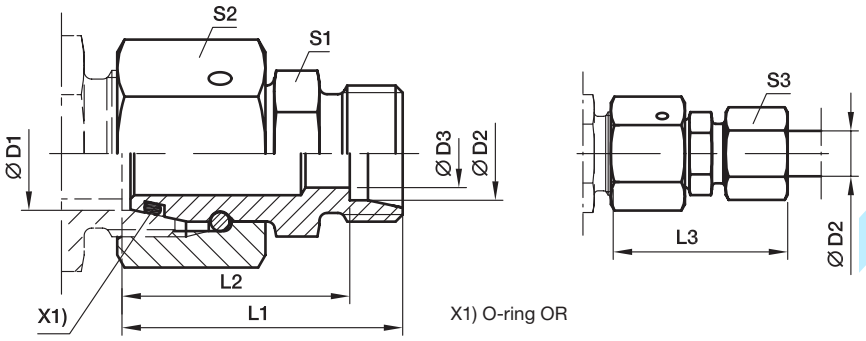

Series 3) 4)	D1	D2	D3	L1	L2	L3	S1	S2	S3	Weight g/1 piece	Order code*	PN (bar)1) CF	PN (bar)1) 71
S	38	20	16	58.5	48.0	70	50	60	36	601	**RED38/20SOMD**	420	315
S	38	25	20	60.5	48.5	73	50	60	46	615	**RED38/25SOMD**	420	315
S/L	38	28	24	56.5	49.0	65	50	60	41	573	**RED38S/28LOMD**	250	160
S	38	30	25	62.5	49.0	76	50	60	50	625	**RED38/30SOMD**	420	315
S/L	38	35	30	58.5	48.0	69	50	60	50	588	**RED38S/35LOMD**	250	160

1) Pressure shown = item deliverable

3) L = light series; 4) S = heavy series

$\frac{\text{PN (bar)}}{10}$ = PN (MPa)

Delivery without nut and ring. Information on ordering complete fittings or alternative sealing materials see page I7.

*Please add the **suffixes** below according to the material/surface required.

Order code suffixes			
Material	Suffix surface and material	Example	Standard sealing material (no additonal. suffix needed)
Steel, zinc plated, Cr(VI)-free	CF	RED16/12SOMDCF	NBR
Stainless Steel	71	RED16/12SOMD71	VIT

kovaz

KOR Tube end reducer – Steel and Brass

EO stand pipe adjustable / EO 24° cone end

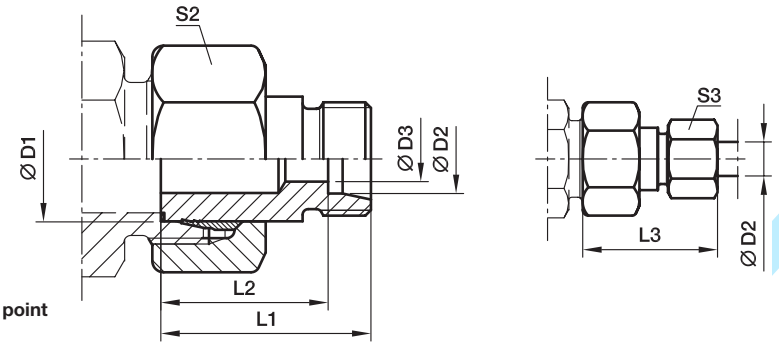

With pre-assembled nut and progressive ring for connection.
Final assembly (in appropriate body) at least 1/4 turn beyond the point of clearly perceptible resistance.

Series [2) 3)]	D1	D2	D3	L1	L2	L3	S2	S3	Weight g/1 piece	Order code*	PN (bar)[1)] CF	PN (bar)[1)] MS
LL	06	04	3.0	28.5	24.5	34	12	10	16	**KOR06/04LLOMD**	100	
LL	08	04	3.0	28.5	24.5	34	14	10	16	**KOR08/04LLOMD**	100	
LL	08	06	4.5	23.0	17.5	29	14	12	14	**KOR08/06LLOMD**	100	
L/LL	06	04	3.0	28.5	24.5	34	14	10	16	**KOR06L/04LLOMD**	100	
L/LL	08	04	3.0	28.5	24.5	34	17	10	16	**KOR08L/04LLOMD**	100	
L	08	06	4.0	30.5	23.5	38	17	14	27	**KOR08/06LOMD**	315	200
L/LL	10	04	3.0	28.5	24.5	34	19	10	32	**KOR10L/04LLOMD**	100	
L	10	06	4.0	30.5	23.5	38	19	14	34	**KOR10/06LOMD**	315	200
L	10	08	6.0	30.5	23.5	38	19	17	35	**KOR10/08LOMD**	315	200
L/LL	12	04	3.0	28.5	24.5	34	22	10	41	**KOR12L/04LLOMD**	100	
L	12	06	4.0	30.5	23.5	38	22	14	45	**KOR12/06LOMD**	315	200
L	12	08	6.0	30.5	23.5	38	22	17	45	**KOR12/08LOMD**	315	200
L	12	10	8.0	31.5	24.5	39	22	19	46	**KOR12/10LOMD**	315	200
L	15	06	4.0	30.5	23.5	38	27	14	68	**KOR15/06LOMD**	315	200
L	15	08	6.0	30.5	23.5	38	27	17	69	**KOR15/08LOMD**	315	200
L	15	10	8.0	31.5	24.5	39	27	19	70	**KOR15/10LOMD**	315	200
L	15	12	10.0	31.5	24.5	39	27	22	70	**KOR15/12LOMD**	315	200
L	18	06	4.0	31.5	24.5	39	32	14	100	**KOR18/06LOMD**	315	200
L	18	08	6.0	31.5	24.5	39	32	17	102	**KOR18/08LOMD**	315	200
L	18	10	8.0	32.5	25.5	40	32	19	102	**KOR18/10LOMD**	315	200
L	18	12	10.0	32.5	25.5	40	32	22	101	**KOR18/12LOMD**	315	200
L	18	15	12.0	33.5	26.5	42	32	27	106	**KOR18/15LOMD**	315	200
L	22	06	4.0	32.5	25.5	40	36	14	137	**KOR22/06LOMD**	160	100
L	22	08	6.0	32.5	25.5	40	36	17	136	**KOR22/08LOMD**	160	100
L	22	10	8.0	33.5	26.5	41	36	19	138	**KOR22/10LOMD**	160	100
L	22	12	10.0	33.5	26.5	41	36	22	138	**KOR22/12LOMD**	160	100
L	22	15	12.0	34.5	27.5	43	36	27	143	**KOR22/15LOMD**	160	100
L	22	18	15.0	34.5	27.0	43	36	32	143	**KOR22/18LOMD**	160	100
L	28	06	4.0	33.5	26.5	41	41	14	177	**KOR28/06LOMD**	160	100
L	28	08	6.0	33.5	26.5	41	41	17	179	**KOR28/08LOMD**	160	100
L	28	10	8.0	34.5	27.5	42	41	19	180	**KOR28/10LOMD**	160	100
L	28	12	10.0	34.5	27.5	42	41	22	180	**KOR28/12LOMD**	160	100
L	28	15	12.0	35.5	28.5	44	41	27	185	**KOR28/15LOMD**	160	100
L	28	18	15.0	35.5	28.0	44	41	32	184	**KOR28/18LOMD**	160	100
L	28	22	19.0	37.5	30.0	46	41	36	188	**KOR28/22LOMD**	160	100
L	35	06	4.0	38.5	31.5	46	50	14	302	**KOR35/06LOMD**	160	
L	35	08	6.0	38.5	31.5	46	50	17	306	**KOR35/08LOMD**	160	
L	35	10	8.0	39.5	32.5	47	50	19	305	**KOR35/10LOMD**	160	100
L	35	12	10.0	39.5	32.5	47	50	22	304	**KOR35/12LOMD**	160	100
L	35	15	12.0	40.5	33.5	49	50	27	308	**KOR35/15LOMD**	160	100
L	35	18	15.0	40.5	33.0	49	50	32	316	**KOR35/18LOMD**	160	100
L	35	22	19.0	42.5	35.0	51	50	36	310	**KOR35/22LOMD**	160	100
L	35	28	24.0	42.5	35.0	52	50	41	305	**KOR35/28LOMD**	160	100

KOR Tube end reducer – Steel and Brass

EO stand pipe adjustable / EO 24° cone end

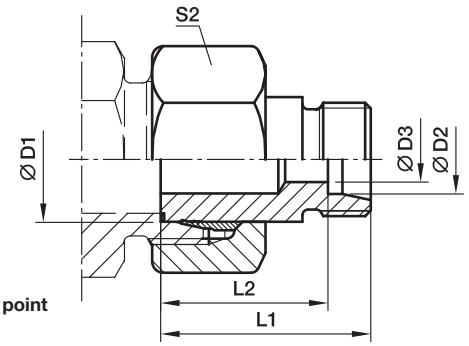

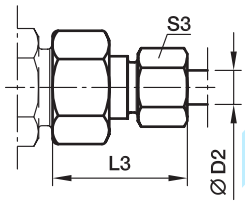

With pre-assembled nut and progressive ring for connection. Final assembly (in appropriate body) at least 1/4 turn beyond the point of clearly perceptible resistance.

Series [2] [3]	D1	D2	D3	L1	L2	L3	S2	S3	Weight g/1 piece	Order code*	PN (bar)[1] CF	PN (bar)[1] MS
L	42	10	8.0	40.5	33.5	48	60	19	455	**KOR42/10LOMD**	160	
L	42	12	10.0	40.5	33.5	48	60	22	438	**KOR42/12LOMD**	160	
L	42	15	12.0	41.5	34.5	50	60	27	438	**KOR42/15LOMD**	160	100
L	42	18	15.0	41.5	34.0	50	60	32	449	**KOR42/18LOMD**	160	100
L	42	22	19.0	43.5	36.0	52	60	36	461	**KOR42/22LOMD**	160	100
L	42	28	24.0	43.5	36.0	53	60	41	443	**KOR42/28LOMD**	160	100
L	42	35	30.0	45.5	35.0	57	60	50	444	**KOR42/35LOMD**	160	100

[1]) Pressure shown = item deliverable

[2]) LL = very light series; [3]) L = light series

$\frac{\text{PN (bar)}}{10}$ = PN (MPa)

The use of the swivel nut fitting RED is to be prefered (see page I35).

Delivery without nut and ring. Information on ordering complete fittings see page I7.

*Please add the **suffixes** below according to the material/surface required.

Order code suffixes		
Material	Suffix surface and material	Example
Steel, zinc plated, Cr(VI)-free	CF	KOR18/15LOMDCF
Brass	MS	KOR18/15LOMDMS

KOR Tube end reducer – Steel and Brass

EO stand pipe adjustable / EO 24° cone end

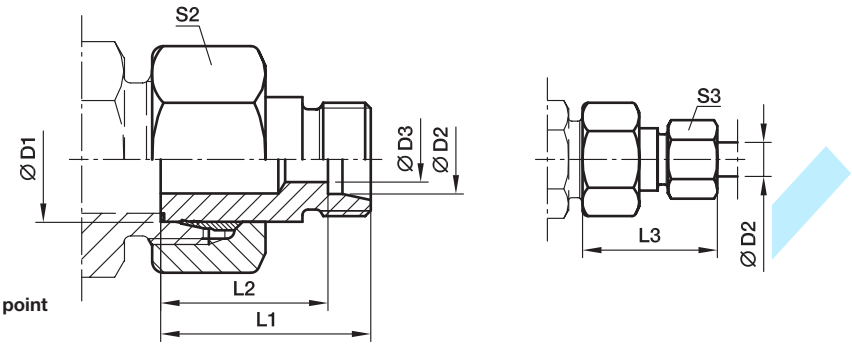

With pre-assembled nut and progressive ring for connection.
Final assembly (in appropriate body) at least 1/4 turn beyond the point of clearly perceptible resistance.

Series	D1	D2	D3	L1	L2	L3	S2	S3	Weight g/1 piece	Order code*	PN (bar)[1] CF	PN (bar)[1] MS
S[4])	08	06	4	32	25.0	40	19	17	37	**KOR08/06SOMD**	630	400
	10	06	4	33	26.0	41	22	17	53	**KOR10/06SOMD**	630	400
	10	08	5	33	26.0	41	22	19	55	**KOR10/08SOMD**	630	400
	12	06	4	34	27.0	42	24	17	61	**KOR12/06SOMD**	630	400
	12	08	5	34	27.0	42	24	19	63	**KOR12/08SOMD**	630	400
	12	10	7	34	26.5	43	24	22	64	**KOR12/10SOMD**	630	400
	16	06	4	36	29.0	44	30	17	106	**KOR16/06SOMD**	400	250
	16	08	5	36	29.0	44	30	19	108	**KOR16/08SOMD**	400	250
	16	10	7	36	28.5	45	30	22	114	**KOR16/10SOMD**	400	250
	16	12	8	36	28.5	45	30	24	115	**KOR16/12SOMD**	400	250
	20	06	4	41	34.0	49	36	17	175	**KOR20/06SOMD**	400	250
	20	08	5	41	34.0	49	36	19	177	**KOR20/08SOMD**	400	250
	20	10	7	41	33.5	50	36	22	178	**KOR20/10SOMD**	400	250
	20	12	8	41	33.5	50	36	24	180	**KOR20/12SOMD**	400	250
	20	16	12	43	34.5	53	36	30	182	**KOR20/16SOMD**	400	250
	25	06	4	44	37.0	52	46	17	306	**KOR25/06SOMD**	400	
	25	08	5	44	37.0	52	46	19	311	**KOR25/08SOMD**	400	250
	25	10	7	44	36.5	53	46	22	313	**KOR25/10SOMD**	400	250
	25	12	8	44	36.5	53	46	24	317	**KOR25/12SOMD**	400	250
	25	16	12	45	36.5	55	46	30	315	**KOR25/16SOMD**	400	250
	25	20	16	48	37.5	59	46	36	328	**KOR25/20SOMD**	400	250
	30	06	4	46	39.0	54	50	17	373	**KOR30/06SOMD**	400	
	30	08	5	46	39.0	54	50	19	376	**KOR30/08SOMD**	400	
	30	10	7	46	38.5	55	50	22	376	**KOR30/10SOMD**	400	250
	30	12	8	46	38.5	55	50	24	377	**KOR30/12SOMD**	400	250
	30	16	12	48	39.5	58	50	30	381	**KOR30/16SOMD**	400	250
	30	20	16	50	39.5	61	50	36	386	**KOR30/20SOMD**	400	250
	30	25	20	52	40.0	64	50	46	406	**KOR30/25SOMD**	400	250
	38	06	4	50	43.0	58	60	17	571	**KOR38/06SOMD**	315	
	38	08	5	50	43.0	58	60	19	567	**KOR38/08SOMD**	315	
	38	10	7	50	42.5	59	60	22	571	**KOR38/10SOMD**	315	200
	38	12	8	50	42.5	59	60	24	571	**KOR38/12SOMD**	315	200
	38	16	12	52	43.5	62	60	30	580	**KOR38/16SOMD**	315	200
	38	20	16	54	43.5	65	60	36	593	**KOR38/20SOMD**	315	200
	38	25	20	56	44.0	68	60	46	605	**KOR38/25SOMD**	315	200
	38	30	25	58	44.5	71	60	50	614	**KOR38/30SOMD**	315	200

[1]) Pressure shown = item deliverable
[4]) S = heavy series

$\frac{\text{PN (bar)}}{10}$ = PN (MPa)

The use of the swivel nut fitting RED is to be prefered (see page I35).

Delivery without nut and ring. Information on ordering complete fittings see page I7.

*Please add the **suffixes** below according to the material/surface required.

Order code suffixes		
Material	Suffix surface and material	Example
Steel, zinc plated, Cr(VI)-free	CF	KOR16/10SOMDCF
Brass	MS	KOR16/10SOMDMS

KOR Tube end reducer – Stainless steel

EO stand pipe adjustable / EO 24° cone end

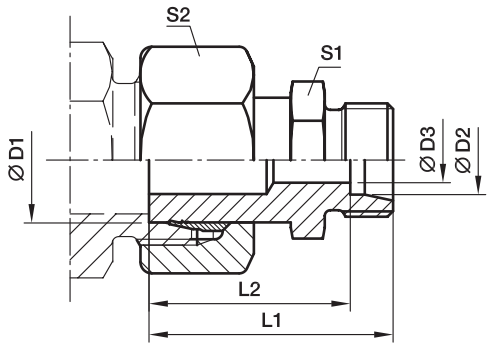

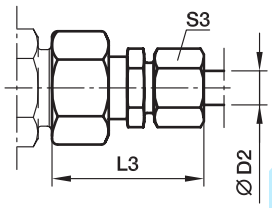

With pre-assembled nut and progressive ring for connection.
Final assembly (in appropriate body) at least 1/4 turn beyond the point of clearly perceptible resistance.

Series	D1	D2	D3	L1	L2	L3	S1	S2	S3	Weight g/1 piece	Order code*	PN (bar)[1] 71
L[3]	08	06	4	33.5	26.5	41	12	17	14	32	**KOR08/06LOMD71**	315
	10	06	4	34.5	27.5	42	12	19	14	39	**KOR10/06LOMD71**	315
	10	08	6	35.5	28.5	43	14	19	17	40	**KOR10/08LOMD71**	315
	12	06	4	36.5	29.5	44	14	22	14	49	**KOR12/06LOMD71**	315
	12	08	6	36.5	29.5	44	14	22	17	53	**KOR12/08LOMD71**	315
	12	10	8	37.5	30.5	45	17	22	19	55	**KOR12/10LOMD71**	315
	15	06	4	37.0	30.0	45	17	27	14	79	**KOR15/06LOMD71**	315
	15	08	6	37.0	30.0	45	17	27	17	78	**KOR15/08LOMD71**	315
	15	10	8	38.0	31.0	46	17	27	19	85	**KOR15/10LOMD71**	315
	15	12	10	39.0	32.0	47	19	27	22	84	**KOR15/12LOMD71**	315
	18	06	4	37.5	30.5	45	19	32	14	112	**KOR18/06LOMD71**	315
	18	08	6	37.5	30.5	45	19	32	17	113	**KOR18/08LOMD71**	315
	18	10	8	38.5	31.5	46	19	32	19	113	**KOR18/10LOMD71**	315
	18	12	10	38.5	31.5	46	19	32	22	122	**KOR18/12LOMD71**	315
	18	15	12	39.5	32.5	48	24	32	27	131	**KOR18/15LOMD71**	315
	22	06	4	38.5	31.5	46	24	36	14	154	**KOR22/06LOMD71**	160
	22	08	6	38.5	31.5	46	24	36	17	155	**KOR22/08LOMD71**	160
	22	10	8	39.5	32.5	47	24	36	19	156	**KOR22/10LOMD71**	160
	22	12	10	39.5	32.5	47	24	36	22	157	**KOR22/12LOMD71**	160
	22	15	12	40.5	33.5	49	24	36	27	160	**KOR22/15LOMD71**	160
	22	18	15	41.5	34.0	50	27	36	32	173	**KOR22/18LOMD71**	160
	28	06	4	41.0	34.0	49	30	41	14	220	**KOR28/06LOMD71**	160
	28	08	6	41.0	34.0	49	30	41	17	217	**KOR28/08LOMD71**	160
	28	10	8	42.0	35.0	50	30	41	19	211	**KOR28/10LOMD71**	160
	28	12	10	42.0	35.0	50	30	41	22	219	**KOR28/12LOMD71**	160
	28	15	12	43.0	36.0	51	30	41	27	188	**KOR28/15LOMD71**	160
	28	18	15	43.0	35.5	52	30	41	32	218	**KOR28/18LOMD71**	160
	28	22	19	45.0	37.5	54	32	41	36	228	**KOR28/22LOMD71**	160
	35	06	4	48.5	41.5	56	36	50	14	307	**KOR35/06LOMD71**	160
	35	08	6	48.5	41.5	56	36	50	17	313	**KOR35/08LOMD71**	160
	35	10	8	49.5	42.5	57	36	50	19	370	**KOR35/10LOMD71**	160
	35	12	10	49.5	42.5	57	36	50	22	371	**KOR35/12LOMD71**	160
	35	15	12	50.5	43.5	59	36	50	27	380	**KOR35/15LOMD71**	160
	35	18	15	50.5	43.0	59	36	50	32	382	**KOR35/18LOMD71**	160
	35	22	19	52.5	45.0	61	36	50	36	380	**KOR35/22LOMD71**	160
	35	28	24	52.5	45.0	62	41	50	41	400	**KOR35/28LOMD71**	160
	42	10	8	52.5	45.5	60	46	60	19	551	**KOR42/10LOMD71**	160
	42	12	10	52.5	45.5	60	46	60	22	551	**KOR42/12LOMD71**	160
	42	15	12	53.5	46.5	62	46	60	27	687	**KOR42/15LOMD71**	160
	42	18	15	53.5	46.0	62	46	60	32	555	**KOR42/18LOMD71**	160
	42	22	19	55.5	48.0	64	46	60	36	568	**KOR42/22LOMD71**	160
	42	28	24	55.5	48.0	65	46	60	41	559	**KOR42/28LOMD71**	160
	42	35	30	57.5	47.0	69	46	60	50	588	**KOR42/35LOMD71**	160

[1]) Pressure shown = item deliverable

[3]) L = light series

$\frac{\text{PN (bar)}}{10}$ = PN (MPa)

The use of the swivel nut fitting RED is to be prefered (see page I35).

Delivery without nut and ring. Information on ordering complete fittings see page I7.

KOR Tube end reducer – Stainless steel

EO stand pipe adjustable / EO 24° cone end

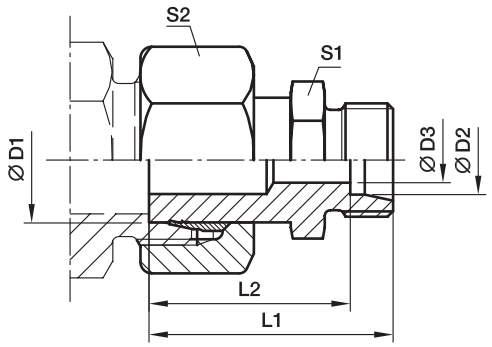

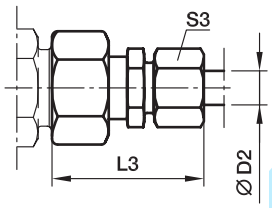

With pre-assembled nut and progressive ring for connection.
Final assembly (in appropriate body) at least 1/4 turn beyond the point of clearly perceptible resistance.

Series	D1	D2	D3	L1	L2	L3	S1	S2	S3	Weight g/1 piece	Order code*	PN (bar)[1] 71
S[4]	08	06	4	36.5	29.5	44	14	19	17	16	**KOR08/06SOMD71**	630
	10	06	4	38.5	31.5	46	14	22	17	16	**KOR10/06SOMD71**	630
	10	08	5	38.5	31.5	46	17	22	19	14	**KOR10/08SOMD71**	630
	12	06	4	38.5	31.5	46	14	24	17	16	**KOR12/06SOMD71**	630
	12	08	5	38.5	31.5	46	17	24	19	16	**KOR12/08SOMD71**	630
	12	10	7	39.5	32.0	48	19	24	22	27	**KOR12/10SOMD71**	630
	16	06	4	41.0	34.0	49	17	30	17	44	**KOR16/06SOMD71**	400
	16	08	5	41.0	34.0	49	17	30	19	45	**KOR16/08SOMD71**	400
	16	10	7	42.0	34.5	51	19	30	22	46	**KOR16/10SOMD71**	400
	16	12	8	42.0	34.5	51	22	30	24	68	**KOR16/12SOMD71**	400
	20	06	4	46.0	39.0	54	22	36	17	70	**KOR20/06SOMD71**	400
	20	08	5	46.0	39.0	54	22	36	19	70	**KOR20/08SOMD71**	400
	20	10	7	46.0	38.5	55	22	36	22	100	**KOR20/10SOMD71**	400
	20	12	8	46.0	38.5	55	22	36	24	101	**KOR20/12SOMD71**	400
	20	16	12	49.0	40.5	59	27	36	30	101	**KOR20/16SOMD71**	400
	25	06	4	50.5	43.5	58	27	46	17	106	**KOR25/06SOMD71**	400
	25	08	5	50.5	43.5	58	27	46	19	136	**KOR25/08SOMD71**	400
	25	10	7	50.5	43.0	59	27	46	22	136	**KOR25/10SOMD71**	400
	25	12	8	50.5	43.0	59	27	46	24	138	**KOR25/12SOMD71**	400
	25	16	12	52.5	44.0	62	27	46	30	143	**KOR25/16SOMD71**	400
	25	20	16	54.5	44.0	66	32	46	36	143	**KOR25/20SOMD71**	400
	30	06	4	53.0	46.0	61	32	50	17	177	**KOR30/06SOMD71**	400
	30	08	5	53.0	46.0	61	32	50	19	179	**KOR30/08SOMD71**	400
	30	10	7	53.0	45.5	62	32	50	22	180	**KOR30/10SOMD71**	400
	30	12	8	53.0	45.5	62	32	50	24	180	**KOR30/12SOMD71**	400
	30	16	12	55.0	46.5	65	32	50	30	184	**KOR30/16SOMD71**	400
	30	20	16	57.0	46.5	68	32	50	36	188	**KOR30/20SOMD71**	400
	30	25	20	60.0	48.0	72	41	50	46	302	**KOR30/25SOMD71**	400
	38	06	4	60.0	53.0	68	41	60	17	306	**KOR38/06SOMD71**	315
	38	08	5	60.0	53.0	68	41	60	19	305	**KOR38/08SOMD71**	315
	38	10	7	60.0	52.5	69	41	60	22	304	**KOR38/10SOMD71**	315
	38	12	8	60.0	52.5	69	41	60	24	308	**KOR38/12SOMD71**	315
	38	16	12	62.0	53.5	72	41	60	30	310	**KOR38/16SOMD71**	315
	38	20	16	64.0	53.5	75	41	60	36	305	**KOR38/20SOMD71**	315
	38	25	20	66.0	54.0	78	41	60	46	455	**KOR38/25SOMD71**	315
	38	30	25	69.0	55.5	82	46	60	50	438	**KOR38/30SOMD71**	315

[1]) Pressure shown = item deliverable
[4]) S = heavy series

$\frac{\text{PN (bar)}}{10}$ = PN (MPa)

The use of the swivel nut fitting RED is to be prefered (see page I35).

Delivery without nut and ring. Information on ordering complete fittings see page I7.

GZ Swivel union

EO 24° DKO swivel

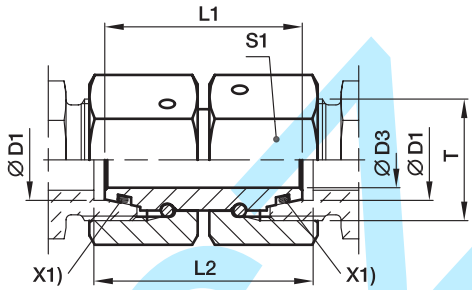

X1) O-ring OR

Series	D1	T	D3	L1	L2	S1	Weight g/1 piece	Order code*	PN (bar)[1] CF	PN (bar)[1] 71
L[3])	06	M 12×1.5	2.5	33	33	14	28	**GZ06L**	500	315
	08	M 14×1.5	4.0	33	33	17	41	**GZ08L**	500	315
	10	M 16×1.5	6.0	34	34	19	53	**GZ10L**	500	315
	12	M 18×1.5	8.0	34	34	22	71	**GZ12L**	400	315
	15	M 22×1.5	10.0	39	39	27	129	**GZ15L**	400	315
	18	M 26×1.5	13.0	36	38	32	165	**GZ18L**	400	315
	22	M 30×2.0	17.0	42	44	36	243	**GZ22L**	250	160
	28	M 36×2.0	22.0	46	48	41	319	**GZ28L**	250	160
	35	M 45×2.0	28.0	48	52	50	449	**GZ35L**	250	160
	42	M 52×2.0	34.0	52	57	60	737	**GZ42L**	250	160
S[4])	06	M 14×1.5	2.5	32	33	17	41	**GZ06S**	800	630
	08	M 16×1.5	4.0	33	34	19	54	**GZ08S**	800	630
	10	M 18×1.5	6.0	33	35	22	74	**GZ10S**	800	630
	12	M 20×1.5	8.0	36	38	24	95	**GZ12S**	630	630
	16	M 24×1.5	11.0	39	42	30	172	**GZ16S**	630	400
	20	M 30×2.0	14.0	44	48	36	261	**GZ20S**	420	400
	25	M 36×2.0	18.0	46	53	46	477	**GZ25S**	420	400
	30	M 42×2.0	23.0	52	62	50	605	**GZ30S**	420	400
	38	M 52×2.0	30.0	52	67	60	826	**GZ38S**	420	315

[1]) Pressure shown = item deliverable

[3]) L = light series; [4]) S = heavy series

$\frac{\text{PN (bar)}}{10}$ = PN (MPa)

Information on ordering complete fittings or alternative sealing materials see page I7.

*Please add the **suffixes** below according to the material/surface required.

Order code suffixes			
Material	Suffix surface and material	Example	Standard sealing material (no additonal. suffix needed)
Steel, zinc plated, Cr(VI)-free	CF	GZ16SCF	NBR
Stainless Steel	71	GZ16S71	VIT

GZR Swivel reducer

EO 24° DKO swivel

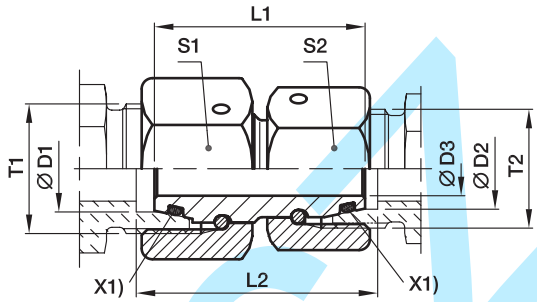

X1) O-ring OR

Series 3) 4)	D1	D2	T1	T2	D3	L1	L2	S1	S2	Weight g/1 piece	Order code*	PN (bar)1) CF	PN (bar)1) 71
L/S	06	06	M 14×1.5	M 12×1.5	2.5	32.5	33.0	17	14	34	**GZR06L/06S**	500	500
L	08	06	M 14×1.5	M 12×1.5	2.5	33.0	33.0	17	14	36	**GZR08/06L**	500	500
L/S	08	08	M 16×1.5	M 14×1.5	4.0	32.5	34.0	19	17	48	**GZR08L/08S**	500	500
L	10	06	M 16×1.5	M 12×1.5	2.5	34.0	34.0	19	14	44	**GZR10/06L**	500	500
L	10	08	M 16×1.5	M 14×1.5	4.0	34.0	34.0	19	17	50	**GZR10/08L**	500	500
L/S	10	10	M 18×1.5	M 16×1.5	6.0	34.0	34.5	22	19	63	**GZR10L/10S**	500	500
L	12	06	M 18×1.5	M 12×1.5	2.5	34.0	34.0	22	14	56	**GZR12/06L**	400	400
L	12	08	M 18×1.5	M 14×1.5	4.0	34.0	34.0	22	17	62	**GZR12/08L**	400	400
L	12	10	M 18×1.5	M 16×1.5	6.0	34.0	34.0	22	19	65	**GZR12/10L**	400	400
L/S	12	12	M 20×1.5	M 18×1.5	8.0	36.5	37.5	24	22	85	**GZR12L/12S**	400	400
L	15	08	M 22×1.5	M 14×1.5	4.0	39.0	39.0	27	17	98	**GZR15/08L**	400	400
L	15	10	M 22×1.5	M 16×1.5	6.0	39.0	39.0	27	19	101	**GZR15/10L**	400	400
L	15	12	M 22×1.5	M 18×1.5	8.0	39.0	39.0	27	22	108	**GZR15/12L**	400	400
L	18	10	M 26×1.5	M 16×1.5	6.0	37.0	37.5	32	19	125	**GZR18/10L**	400	400
L	18	12	M 26×1.5	M 18×1.5	8.0	36.5	37.5	32	22	132	**GZR18/12L**	400	400
L	18	15	M 26×1.5	M 22×1.5	10.0	38.5	38.5	32	27	155	**GZR18/15L**	400	400
L/S	18	16	M 26×1.5	M 24×1.5	11.0	39.0	39.0	32	30	177	**GZR18L/16S**	400	400
L	22	12	M 30×2.0	M 18×1.5	8.0	42.5	43.5	36	22	195	**GZR22/12L**	250	250
L	22	15	M 30×2.0	M 22×1.5	10.0	42.5	43.5	36	27	215	**GZR22/15L**	250	250
L	22	18	M 30×2.0	M 26×1.5	13.0	42.0	44.0	36	32	228	**GZR22/18L**	250	250
L/S	22	20	M 30×2.0	M 30×2.0	14.0	44.0	47.0	36	36	266	**GZR22L/20S**	250	250
L	28	15	M 36×2.0	M 22×1.5	10.0	46.5	47.5	41	27	143	**GZR28/15L**	250	250
L	28	18	M 36×2.0	M 26×1.5	13.0	39.5	48.0	41	32	311	**GZR28/18L**	250	250
L	28	22	M 36×2.0	M 30×2.0	17.0	46.0	46.0	41	36	309	**GZR28/22L**	250	250
L/S	28	25	M 36×2.0	M 36×2.0	18.0	46.0	50.5	41	46	419	**GZR28L/25S**	250	250
L	35	18	M 45×2.0	M 26×1.5	13.0	48.0	51.0	50	32	430	**GZR35/18L**	250	250
L	35	22	M 45×2.0	M 30×2.0	17.0	48.0	51.0	50	36	429	**GZR35/22L**	250	250
L	35	28	M 45×2.0	M 36×2.0	22.0	48.0	51.0	50	41	415	**GZR35/28L**	250	250
L/S	35	30	M 45×2.0	M 42×2.0	23.0	52.0	59.0	50	50	577	**GZR35L/30S**	250	250
L	42	22	M 52×2.0	M 30×2.0	17.0	52.0	55.5	60	36	653	**GZR42/22L**	250	250
L	42	28	M 52×2.0	M 36×2.0	22.0	52.0	55.5	60	41	648	**GZR42/28L**	250	250
L	42	35	M 52×2.0	M 45×2.0	28.0	52.0	56.5	60	50	662	**GZR42/35L**	250	250
L/S	42	38	M 52×2.0	M 52×2.0	30.0	52.0	62.0	60	60	822	**GZR42L/38S**	250	250
S	08	06	M 16×1.5	M 14×1.5	2.5	33.0	34.0	19	17	49	**GZR08/06S**	800	800
S	10	06	M 18×1.5	M 14×1.5	2.5	33.0	34.5	22	17	60	**GZR10/06S**	800	800
S	10	08	M 18×1.5	M 16×1.5	4.0	33.0	34.5	22	19	66	**GZR10/08S**	800	800
S	12	06	M 20×1.5	M 14×1.5	2.5	36.0	37.5	24	17	77	**GZR12/06S**	630	630
S	12	08	M 20×1.5	M 16×1.5	4.0	36.0	37.5	24	19	82	**GZR12/08S**	630	630
S	12	10	M 20×1.5	M 18×1.5	6.0	36.0	38.0	24	22	89	**GZR12/10S**	630	630
S	16	10	M 24×1.5	M 18×1.5	6.0	39.0	41.5	30	22	138	**GZR16/10S**	630	630
S	16	12	M 24×1.5	M 20×1.5	8.0	39.0	41.5	30	24	143	**GZR16/12S**	630	630
S/L	16	15	M 24×1.5	M 22×1.5	10.0	39.5	41.5	30	27	153	**GZR16S/15L**	400	400
S	20	12	M 30×2.0	M 20×1.5	8.0	44.0	47.0	36	24	204	**GZR20/12S**	420	420

GZR Swivel reducer

EO 24° DKO swivel

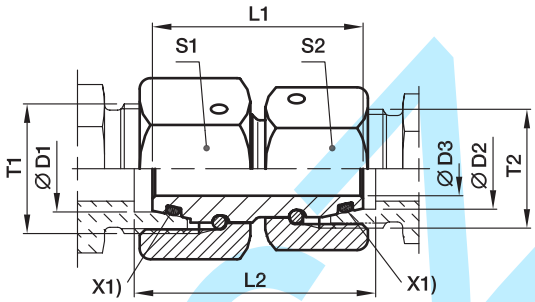

X1) O-ring OR

Series 3) 4)	D1	D2	T1	T2	D3	L1	L2	S1	S2	Weight g/1 piece	Order code*	PN (bar)1) CF	PN (bar)1) 71
S	20	16	M 30×2.0	M 24×1.5	11.0	44	47.5	36	30	232	**GZR20/16S**	420	420
S/L	20	18	M 30×2.0	M 26×1.5	13.0	44	47.0	36	32	224	**GZR20S/18L**	400	400
S	25	16	M 36×2.0	M 24×1.5	11.0	46	51.0	46	30	224	**GZR25/16S**	420	420
S	25	20	M 36×2.0	M 30×2.0	14.0	46	51.5	46	36	364	**GZR25/20S**	420	420
S/L	25	22	M 36×2.0	M 30×2.0	17.0	46	50.5	46	36	475	**GZR25S/22L**	250	250
S	30	16	M 42×2.0	M 24×1.5	11.0	52	58.5	50	30	475	**GZR30/16S**	420	420
S	30	20	M 42×2.0	M 30×2.0	14.0	52	59.0	50	36	500	**GZR30/20S**	420	420
S	30	25	M 42×2.0	M 36×2.0	18.0	52	60.5	50	46	589	**GZR30/25S**	420	420
S/L	30	28	M 42×2.0	M 36×2.0	22.0	52	58.0	50	41	476	**GZR30S/28L**	250	250
S	38	20	M 52×2.0	M 30×2.0	14.0	52	61.5	60	36	671	**GZR38/20S**	420	420
S	38	25	M 52×2.0	M 36×2.0	18.0	52	63.0	60	46	759	**GZR38/25S**	420	420
S	38	30	M 52×2.0	M 42×2.0	23.0	52	64.5	60	50	767	**GZR38/30S**	420	420
S/L	38	35	M 52×2.0	M 45×2.0	28.0	52	61.5	60	50	662	**GZR38S/35L**	250	250

1) Pressure shown = item deliverable

3) L = light series; 4) S = heavy series

$\frac{\text{PN (bar)}}{10}$ = PN (MPa)

Information on ordering complete fittings or alternative sealing materials see page I7.

*Please add the **suffixes** below according to the material/surface required.

Order code suffixes			
Material	Suffix surface and material	Example	Standard sealing material (no additonal. suffix needed)
Steel, zinc plated, Cr(VI)-free	CF	GZR16/12SCF	NBR
Stainless steel	71	GZR16/12S71	VIT

Kovar.cz

GEO Male stud connector

Male metric thread – O-ring (ISO 6149) / EO 24° cone end

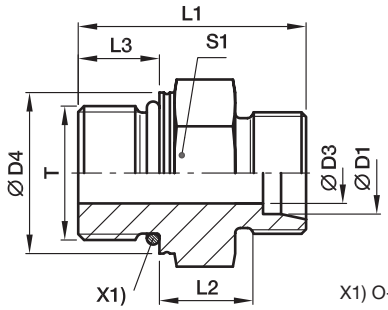

X1) O-ring OR

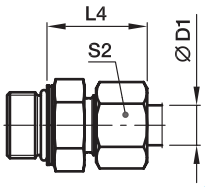

Series	D1	T	D3	D4	L1	L2	L3	L4	S1	S2	Weight g/1 piece	Order code*	PN (bar)[1] CF	PN (bar)[1] 71
LL[2])	04	M 08×1.0	3.0	10.8	20.0	9.5	6.5	19.0	11*	10	8	**GEO04LLMOMD**	100	100
	04	M 10×1.0	3.0	12.8	20.0	9.5	6.5	19.0	13	10	11	**GEO04LLM10X1OMD**	100	
	06	M 10×1.0	4.5	12.8	20.0	8.0	6.5	19.5	13	12	10	**GEO06LLMOMD**	100	
L[3])	06	M 10×1.0	4.5	14.0	25.0	8.5	8.5	23.0	14	14	15	**GEO06LMOMD**	500	315
	08	M 12×1.5	6.0	17.0	28.0	10.0	11.0	25.0	17	17	23	**GEO08LMOMD**	500	315
	10	M 14×1.5	7.5	19.0	29.0	11.0	11.0	26.0	19	19	28	**GEO10LMOMD**	500	315
	12	M 16×1.5	9.0	22.0	31.0	12.5	11.5	27.0	22	22	40	**GEO12LMOMD**	400	315
	15	M 18×1.5	11.0	24.0	33.0	13.5	12.5	29.0	24	27	56	**GEO15LMOMD**	400	315
	18	M 22×1.5	14.0	27.0	35.0	14.5	13.0	31.0	27	32	80	**GEO18LMOMD**	400	315
	22	M 27×2.0	18.0	32.0	40.0	16.5	16.0	33.0	32	36	104	**GEO22LM27X2OMD**	250	160
	28	M 33×2.0	23.0	41.0	41.0	17.5	16.0	34.0	41	41	171	**GEO28LMOMD**	250	160
	35	M 42×2.0	30.0	50.0	44.0	17.5	16.0	39.0	50	50	278	**GEO35LMOMD**	250	160
	42	M 48×2.0	36.0	55.0	47.5	19.0	17.5	42.0	55	60	340	**GEO42LMOMD**	250	160
S[4])	06	M 12×1.5	4.0	17.0	31.0	13.0	11.0	28.0	17	17	29	**GEO06SMOMD**	800	630
	08	M 14×1.5	6.0	19.0	33.0	15.0	11.0	30.0	19	19	41	**GEO08SMOMD**	800	630
	10	M 16×1.5	7.0	22.0	35.0	15.0	12.5	31.0	22	22	55	**GEO10SMOMD**	800	630
	12	M 18×1.5	9.0	24.0	38.5	17.0	14.0	33.0	24	24	73	**GEO12SMOMD**	630	630
	16	M 22×1.5	12.0	27.0	42.0	18.5	15.0	37.0	27	30	102	**GEO16SMOMD**	630	400
	20	M 27×2.0	15.0	32.0	49.5	20.5	18.5	42.0	32	36	169	**GEO20SMOMD**	420	400
	25	M 33×2.0	20.0	41.0	53.5	23.0	18.5	47.0	41	46	274	**GEO25SMOMD**	420	400
	30	M 42×2.0	26.0	50.0	56.0	23.5	19.0	50.0	50	50	412	**GEO30SMOMD**	420	400
	38	M 48×2.0	32.0	55.0	63.5	26.0	21.5	57.0	55	60	580	**GEO38SMOMD**	420	315

[1]) Pressure shown = item deliverable

[2]) LL = very light series; [3]) L = light series; [4]) S = heavy series

$\frac{\text{PN (bar)}}{10}$ = PN (MPa)

Delivery without nut and ring. Information on ordering complete fittings see page I7.

***S1=SW12 in 1.4571**

*Please add the **suffixes** below according to the material/surface required.

Order code suffixes			
Material	Suffix surface and material	Example	Standard sealing material (no additonal. suffix needed)
Steel, zinc plated, Cr(VI)-free	CF	GEO16SMOMDCF	NBR
Stainless Steel	71	GEO16SMOMD71	VIT

GE-M-ED Male stud connector

Male metric thread – ED (ISO 9974) / EO 24° cone end

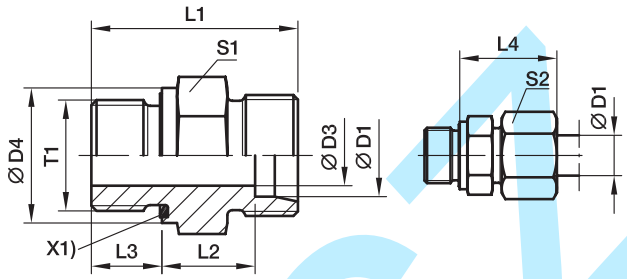

X1) Eolastic-sealing ED

Series	D1	T1	D3	D4	L1	L2	L3	L4	S1	S2	Weight g/1 piece	Order code*	PN (bar)[1] CF	PN (bar)[1] 71
L[3]	06	M 10×1.0	4	14	23.5	8.5	8	23	14	14	13	**GE06LMEDOMD**	500	315
	08	M 12×1.5	6	17	29.0	10.0	12	25	17	17	22	**GE08LMEDOMD**	500	315
	10	M 14×1.5	7	19	30.0	11.0	12	26	19	19	29	**GE10LMEDOMD**	500	315
	10	M 12×1.5	6	17	30.0	11.0	12	26	17	19	23	**GE10LM12X1.5EDOMD**	315	315
	10	M 16×1.5	8	22	31.5	12.5	12	27	22	19	40	**GE10LM16X1.5EDOMD**	420	315
	10	M 18×1.5	8	24	31.5	12.5	12	27	24	19	50	**GE10LM18X1.5EDOMD**	400	315
	10	M 22×1.5	8	27	35.0	14.0	14	29	27	19	80	**GE10LM22X1.5EDOMD**	400	315
	12	M 16×1.5	9	22	31.5	12.5	12	27	22	22	40	**GE12LMEDOMD**	400	315
	12	M 14×1.5	7	19	30.0	11.0	12	26	19	22	30	**GE12LM14X1.5EDOMD**	400	315
	12	M 18×1.5	10	24	31.5	12.5	12	27	24	22	47	**GE12LM18X1.5EDOMD**	400	315
	12	M 22×1.5	10	27	35.0	14.0	14	29	27	22	75	**GE12LM22X1.5EDOMD**	400	315
	15	M 18×1.5	11	24	32.5	13.5	12	29	24	27	51	**GE15LMEDOMD**	400	315
	15	M 16×1.5	9	22	32.0	13.0	12	28	24	27	64	**GE15LM16X1.5EDOMD**	400	315
	15	M 22×1.5	12	27	36.0	15.0	14	30	27	27	77	**GE15LM22X1.5EDOMD**	400	315
	18	M 22×1.5	14	27	36.0	14.5	14	31	27	32	74	**GE18LMEDOMD**	400	315
	18	M 18×1.5	11	24	33.5	14.0	12	30	27	32	68	**GE18LM18X1.5EDOMD**	400	315
	22	M 26×1.5	18	32	40.0	16.5	16	33	32	36	103	**GE22LMEDOMD**	250	160
	22	M 22×1.5	14	32	38.0	16.5	14	33	32	36	97	**GE22LM22X1.5EDOMD**	250	160
	28	M 33×2.0	23	40	43.0	17.5	18	34	41	41	168	**GE28LMEDOMD**	250	160
	35	M 42×2.0	30	50	48.0	17.5	20	39	50	50	281	**GE35LMEDOMD**	250	160
	42	M 48×2.0	36	55	52.0	19.0	22	42	55	60	356	**GE42LMEDOMD**	250	160
S[4]	06	M 12×1.5	4	17	32.0	13.0	12	28	17	17	30	**GE06SMEDOMD**	800	630
	08	M 14×1.5	5	19	34.0	15.0	12	30	19	19	42	**GE08SMEDOMD**	800	630
	10	M 16×1.5	7	22	34.5	15.0	12	31	22	22	54	**GE10SMEDOMD**	800	630
	12	M 18×1.5	8	24	36.5	17.0	12	33	24	24	71	**GE12SMEDOMD**	630	630
	12	M 14×1.5	5	19	36.0	16.5	12	33	22	24	60	**GE12SM14X1.5EDOMD**	630	630
	12	M 22×1.5	8	27	39.0	17.5	14	34	27	24	102	**GE12SM22X1.5EDOMD**	630	400
	16	M 22×1.5	12	27	41.0	18.5	14	37	27	30	95	**GE16SMEDOMD**	630	400
	16	M 18×1.5	8	24	38.5	18.0	12	36	27	30	88	**GE16SM18X1.5EDOMD**	630	400
	20	M 27×2.0	16	32	47.0	20.5	16	42	32	36	150	**GE20SMEDOMD**	420	400
	25	M 33×2.0	20	40	53.0	23.0	18	47	41	46	264	**GE25SMEDOMD**	420	400
	30	M 42×2.0	25	50	57.0	23.5	20	50	50	50	422	**GE30SMEDOMD**	420	400
	38	M 48×2.0	32	55	64.0	26.0	22	57	55	60	569	**GE38SMEDOMD**	420	315

[1]) Pressure shown = item deliverable

[3]) L = light series; [4]) S = heavy series

$\frac{\text{PN (bar)}}{10}$ = PN (MPa)

Delivery without nut and ring. Information on ordering complete fittings or alternative sealing materials see page I7.

*Please add the below according to the material/surface required.

Order code suffixes			
Material	Suffix surface and material	Example	Standard sealing material (no additonal. suffix needed)
Steel, zinc plated, Cr(VI)-free	CF	GE16SMEDOMDCF	NBR
Stainless Steel	71	GE16SMEDOMD71	VIT

GE-R-ED Male stud connector

Male BSPP thread – ED-seal (ISO 1179) / EO 24° cone end

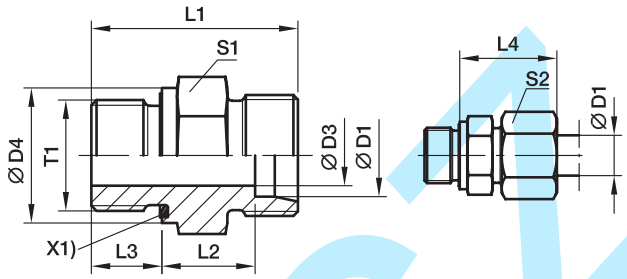

X1) Eolastic-sealing ED

Series	D1	T1	D3	D4	L1	L2	L3	L4	S1	S2	Weight g/1 piece	Order code*	PN (bar)[1] CF	71	MS
LL[2]	04	G 1/8 A	3	14	20.0	9.5	6.5	19	14	10	10	**GE04LLREDOMD**	100	100	63
	06	G 1/8 A	4	14	20.0	8.0	6.5	20	14	12	11	**GE06LLREDOMD**	100	100	63
L[3]	06	G 1/8 A	4	14	23.5	8.5	8.0	23	14	14	13	**GE06LREDOMD**	500	315	200
	06	G 1/4 A	4	19	29.0	10.0	12.0	25	19	14	28	**GE06LR1/4EDOMD**	500	315	200
	06	G 3/8 A	4	22	30.5	11.5	12.0	26	22	14	44	**GE06LR3/8EDOMD**	420	315	200
	06	G 1/2 A	4	27	33.0	12.0	14.0	27	27	14	61	**GE06LR1/2EDOMD**	400	315	200
	08	G 1/4 A	6	19	29.0	10.0	12.0	25	19	17	27	**GE08LREDOMD**	500	315	200
	08	G 1/8 A	4	14	24.5	9.5	8.0	24	14	17	16	**GE08LR1/8EDOMD**	500	315	200
	08	G 3/8 A	6	22	30.5	11.5	12.0	26	22	17	45	**GE08LR3/8EDOMD**	420	315	200
	08	G 1/2 A	6	27	33.0	12.0	14.0	27	27	17	74	**GE08LR1/2EDOMD**	400	315	200
	10	G 1/4 A	6	19	30.0	11.0	12.0	26	19	19	29	**GE10LREDOMD**	500	315	200
	10	G 1/8 A	4	14	25.5	10.5	8.0	25	17	19	21	**GE10LR1/8EDOMD**	500	315	200
	10	G 3/8 A	8	22	31.5	12.5	12.0	27	22	19	43	**GE10LR3/8EDOMD**	420	315	200
	10	G 1/2 A	8	27	34.0	13.0	14.0	28	27	19	71	**GE10LR1/2EDOMD**	400	315	200
	12	G 3/8 A	9	22	31.5	12.5	12.0	27	22	22	41	**GE12LREDOMD**	420	315	200
	12	G 1/8 A	4	14	26.5	11.5	8.0	26	19	22	26	**GE12LR1/8EDOMD**	420	315	200
	12	G 1/4 A	6	19	31.0	12.0	12.0	27	19	22	31	**GE12LR1/4EDOMD**	400	315	200
	12	G 1/2 A	10	27	34.0	13.0	14.0	28	27	22	67	**GE12LR1/2EDOMD**	400	315	200
	12	G 3/4 A	10	32	37.0	14.0	16.0	29	32	22	118	**GE12LR3/4EDOMD**	250	160	100
	15	G 1/2 A	11	27	35.0	14.0	14.0	29	27	27	72	**GE15LREDOMD**	400	315	200
	15	G 3/8 A	9	22	32.5	13.5	12.0	29	24	27	54	**GE15LR3/8EDOMD**	400	315	200
	15	G 3/4 A	12	32	38.0	15.0	16.0	30	32	27	116	**GE15LR3/4EDOMD**	250	160	100
	18	G 1/2 A	14	27	36.0	14.5	14.0	31	27	32	71	**GE18LREDOMD**	400	315	200
	18	G 3/8 A	9	22	33.5	14.0	12.0	30	27	32	66	**GE18LR3/8EDOMD**	400	315	200
	18	G 3/4 A	15	32	38.0	14.5	16.0	31	32	32	110	**GE18LR3/4EDOMD**	250	160	100
	22	G 3/4 A	18	32	40.0	16.5	16.0	33	32	36	102	**GE22LREDOMD**	250	160	100
	22	G 1/2 A	14	27	38.0	16.5	14.0	33	32	36	91	**GE22LR1/2EDOMD**	250	160	100
	22	G 1 A	19	40	43.0	17.5	18.0	34	41	36	189	**GE22LR1EDOMD**	250	160	100
	28	G 1 A	23	40	43.0	17.5	18.0	34	41	41	170	**GE28LREDOMD**	250	160	100
	28	G 3/4 A	18	32	41.0	17.5	16.0	34	41	41	159	**GE28LR3/4EDOMD**	250	160	100
	28	G 1 1/4 A	24	50	46.0	18.5	20.0	35	50	41	316	**GE28LR11/4EDOMD**	250	160	100
	35	G 1 1/4 A	30	50	48.0	17.5	20.0	39	50	50	272	**GE35LREDOMD**	250	160	100
	35	G 1 A	23	40	46.0	17.5	18.0	39	46	50	226	**GE35LR1EDOMD**	250	160	100
	35	G 1 1/2 A	30	55	52.0	19.5	22.0	41	55	50	423	**GE35LR11/2EDOMD**	250	160	100
	42	G 1 1/2 A	36	55	52.0	19.0	22.0	42	55	60	343	**GE42LREDOMD**	250	160	100
	42	G 1 A	23	40	48.0	19.0	18.0	42	55	60	324	**GE42LR1EDOMD**	250	160	100
	42	G 1 1/4 A	30	50	50.0	19.0	20.0	42	55	60	348	**GE42LR11/4EDOMD**	250	160	100

[1]) Pressure shown = item deliverable

[2]) LL = very light series; [3]) L = light series

$\frac{\text{PN (bar)}}{10}$ = PN (MPa)

Delivery without nut and ring. Information on ordering complete fittings or alternative sealing materials see page I7.

*Please add the **suffixes** below according to the material/surface required.

Order code suffixes			
Material	Suffix surface and material	Example	Standard sealing material (no additonal. suffix needed)
Steel, zinc plated, Cr(VI)-free	CF	GE18LREDOMDCF	NBR
Stainless Steel	71	GE18LREDOMD71	VIT
Brass	MS	GE18LREDOMDMS	NBR

GE-R-ED Male stud connector

Male BSPP thread – ED-seal (ISO 1179) / EO 24° cone end

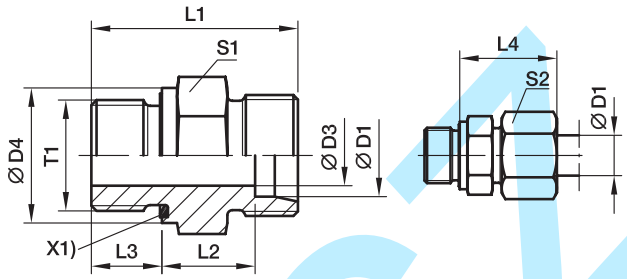

X1) Eolastic-sealing ED

Series	D1	T1	D3	D4	L1	L2	L3	L4	S1	S2	Weight g/1 piece	Order code*	PN (bar)[1] CF	71	MS
S[4]	06	G 1/4 A	4	19	32.0	13.0	12	28	19	17	35	**GE06SREDOMD**	800	630	400
	06	G 1/8 A	4	14	27.5	12.5	8	27	14	17	21	**GE06SR1/8EDOMD**	500	315	
	06	G 3/8 A	4	22	34.5	15.5	12	30	22	17	52	**GE06SR3/8EDOMD**	630	630	
	06	G 1/2 A	4	27	39.0	18.0	14	33	27	17	83	**GE06SR1/2EDOMD**	630	400	
	08	G 1/4 A	5	19	34.0	15.0	12	30	19	19	41	**GE08SREDOMD**	800	630	400
	08	G 3/8 A	5	22	34.5	15.5	12	30	22	19	57	**GE08SR3/8EDOMD**	800	630	
	08	G 1/2 A	5	27	39.0	18.0	14	33	27	19	89	**GE08SR1/2EDOMD**	630	400	
	10	G 3/8 A	7	22	34.5	15.0	12	31	22	22	55	**GE10SREDOMD**	800	630	400
	10	G 1/4 A	5	19	34.0	14.5	12	31	19	22	42	**GE10SR1/4EDOMD**	800	630	
	10	G 1/2 A	7	27	39.0	17.5	14	34	27	22	97	**GE10SR1/2EDOMD**	630	630	
	12	G 3/8 A	8	22	36.5	17.0	12	33	22	24	62	**GE12SREDOMD**	630	630	400
	12	G 1/4 A	5	19	36.0	16.5	12	33	22	24	61	**GE12SR1/4EDOMD**	630	630	
	12	G 1/2 A	8	27	39.0	17.5	14	34	27	24	99	**GE12SR1/2EDOMD**	630	630	
	16	G 1/2 A	12	27	41.0	18.5	14	37	27	30	91	**GE16SREDOMD**	630	400	250
	16	G 3/8 A	8	22	38.5	18.0	12	36	27	30	83	**GE16SR3/8EDOMD**	630	400	
	16	G 3/4 A	12	32	45.0	20.5	16	39	32	30	152	**GE16SR3/4EDOMD**	420	400	
	20	G 3/4 A	16	32	47.0	20.5	16	42	32	36	149	**GE20SREDOMD**	420	400	250
	20	G 1/2 A	12	27	45.0	20.5	14	42	32	36	142	**GE20SR1/2EDOMD**	420	400	
	20	G 1 A	16	40	51.0	22.5	18	44	41	36	265	**GE20SR1EDOMD**	420	400	
	20	G 1 1/4 A	16	50	53.0	22.5	20	44	50	36	404	**GE20SR11/4EDOMD**	420	400	
	25	G 1 A	20	40	53.0	23.0	18	47	41	46	266	**GE25SREDOMD**	420	400	250
	25	G 1/2 A	12	27	49.0	23.0	14	47	41	46	228	**GE25SR1/2EDOMD**	420	400	
	25	G 3/4 A	16	32	51.0	23.0	16	47	41	46	255	**GE25SR3/4EDOMD**	420	400	
	25	G 1 1/4 A	20	50	55.0	23.0	20	47	50	46	411	**GE25SR11/4EDOMD**	420	400	
	25	G 1 1/2 A	20	55	60.0	26.0	22	50	55	46	549	**GE25SR11/2EDOMD**	315	315	
	30	G 1 1/4 A	25	50	57.0	23.5	20	50	50	50	418	**GE30SREDOMD**	420	400	250
	30	G 1 A	20	40	55.0	23.5	18	50	46	50	344	**GE30SR1EDOMD**	420	400	
	30	G 1 1/2 A	25	55	62.0	26.5	22	53	55	50	530	**GE30SR11/2EDOMD**	315	315	
	38	G 1 1/2 A	32	55	64.0	26.0	22	57	55	60	563	**GE38SREDOMD**	420	315	200
	38	G 1 1/4 A	25	50	62.0	26.0	20	57	55	60	575	**GE38SR11/4EDOMD**	420	315	

[1]) Pressure shown = item deliverable

[4]) S = heavy series

$\frac{\text{PN (bar)}}{10}$ = PN (MPa)

Delivery without nut and ring. Information on ordering complete fittings or alternative sealing materials see page I7.

*Please add the **suffixes** below according to the material/surface required

Order code suffixes			
Material	Suffix surface and material	Example	Standard sealing material (no additonal. suffix needed)
Steel, zinc plated, Cr(VI)-free	CF	GE16SREDOMDCF	NBR
Stainless Steel	71	GE16SREDOMD71	VIT
Brass	MS	GE16SREDOMDMS	NBR

GE-R Male stud connector

Male BSPP thread – metal sealing edge (ISO 1179) / EO 24° cone end

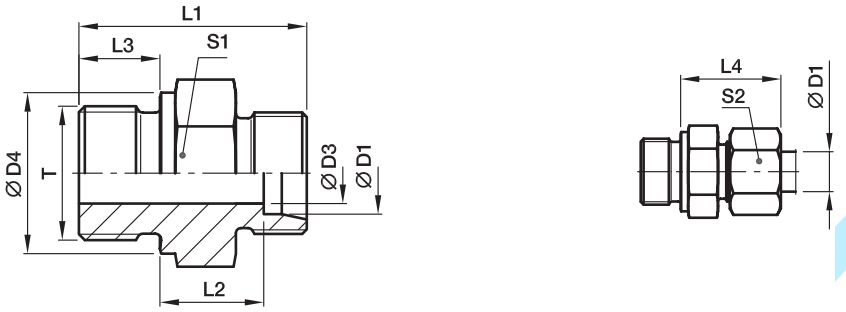

Series	D1	T	D3	D4	L1	L2	L3	L4	S1	S2	Weight g/1 piece	Order code*	PN (bar)[1] CF	71	MS
L[3]	06	G 1/8 A	4	14	23.5	8.5	8	23.0	14	14	14	**GE06LR**	315	315	200
	06	G 1/4 A	4	18	29.0	10.0	12	25.0	19	14	60	**GE06LR1/4**	315	315	200
	06	G 3/8 A	4	22	30.5	11.5	12	26.0	22	14	45	**GE06LR3/8**	315	315	200
	06	G 1/2 A	4	26	33.0	12.0	14	27.0	27	14	60	**GE06LR1/2**	315	315	
	08	G 1/4 A	6	18	29.0	10.0	12	25.0	19	17	26	**GE08LR**	315	315	200
	08	G 1/8 A	4	14	24.5	8.5	8	23.0	14	17	16	**GE08LR1/8**	315	315	
	08	G 3/8 A	6	22	30.5	11.5	12	26.0	22	17	44	**GE08LR3/8**	315	315	200
	08	G 1/2 A	6	26	33.0	12.0	14	27.0	27	17	74	**GE08LR1/2**	315	315	200
	10	G 1/4 A	6	18	30.0	11.0	12	26.0	19	19	31	**GE10LR**	315	315	200
	10	G 1/8 A	4	14	25.5	10.5	8	25.0	17	19	21	**GE10LR1/8**	315	315	
	10	G 3/8 A	8	22	31.5	12.5	12	27.0	22	19	44	**GE10LR3/8**	315	315	200
	10	G 1/2 A	8	26	34.0	13.0	14	28.0	27	19	72	**GE10LR1/2**	315	315	200
	12	G 3/8 A	9	22	31.5	12.5	12	27.0	22	22	43	**GE12LR**	315	315	200
	12	G 1/8 A	4	14	26.5	11.5	8	26.0	19	22	27	**GE12LR1/8**	315	315	
	12	G 1/4 A	6	18	31.0	12.0	12	27.0	19	22	32	**GE12LR1/4**	315	315	200
	12	G 1/2 A	10	26	34.0	13.0	14	28.0	27	22	67	**GE12LR1/2**	315	315	200
	12	G 3/4 A	10	32	37.0	14.0	16	29.0	32	22	120	**GE12LR3/4**	315	315	
	15	G 1/2 A	11	26	35.0	14.0	14	29.0	27	27	72	**GE15LR**	250	250	160
	15	G 3/8 A	9	22	32.5	13.5	12	29.0	24	27	56	**GE15LR3/8**	250	250	160
	15	G 3/4 A	12	32	38.0	15.0	16	30.0	32	27	118	**GE15LR3/4**	250	250	
	18	G 1/2 A	14	26	36.0	14.5	14	31.0	27	32	72	**GE18LR**	250	250	160
	18	G 3/8 A	9	22	33.5	14.0	12	29.5	27	32	69	**GE18LR3/8**	250	250	
	18	G 3/4 A	15	32	38.0	14.5	16	30.0	32	32	112	**GE18LR3/4**	250	250	
	22	G 3/4 A	18	32	40.0	16.5	16	33.0	32	36	103	**GE22LR**	160	160	100
	22	G 1/2 A	14	26	38.0	16.5	14	33.0	32	36	91	**GE22LR1/2**	160	160	100
	22	G 1 A	19	39	43.0	17.5	18	33.5	41	36	184	**GE22LR1**	160	160	
	28	G 1 A	23	39	43.0	17.5	18	34.0	41	41	168	**GE28LR**	160	160	100
	28	G 1/2 A	14	26	39.0	17.5	14	34.0	41	41	141	**GE28LR1/2**	160	160	
	28	G 3/4 A	18	32	41.0	17.5	16	34.0	41	41	156	**GE28LR3/4**	160	160	
	28	G 1 1/4 A	24	50	46.0	18.3	20	35.0	50	41	314	**GE28LR11/4**	160	160	
	35	G 1 1/4 A	30	49	48.0	17.5	20	39.0	50	50	276	**GE35LR**	160	160	100
	35	G 1/2 A	14	26	42.0	17.5	14	39.0	46	50	194	**GE35LR1/2**	160	160	
	35	G 3/4 A	18	32	44.0	17.5	16	39.0	46	50	202	**GE35LR3/4**	160	160	
	35	G 1 A	23	39	46.0	17.5	18	39.0	46	50	234	**GE35LR1**	160	160	
	35	G 1 1/2 A	30	55	52.0	19.5	22	41.0	55	50	355	**GE35LR11/2**	160	160	
	42	G 1 1/2 A	36	55	52.0	19.0	22	42.0	55	60	349	**GE42LR**	160	160	100
	42	G 1 A	23	39	48.0	19.0	18	42.0	55	60	327	**GE42LR1**	160	160	
	42	G 1 1/4 A	30	49	50.0	19.0	20	42.0	55	60	336	**GE42LR11/4**	160	160	

[1]) Pressure shown = item deliverable

[3]) L = light series

$\frac{PN\ (bar)}{10}$ = PN (MPa)

Delivery without nut and ring. Information on ordering complete fittings see page I7.

*Please add the **suffixes** below according to the material/surface required.

Order code suffixes		
Material	Suffix surface and material	Example
Steel, zinc plated, Cr(VI)-free	CFX	GE18LRCFX
Stainless Steel	71X	GE18LR71X
Brass	MSX	GE18LRMSX

GE-R Male stud connector

Male BSPP thread – metal sealing edge (ISO 1179) / EO 24° cone end

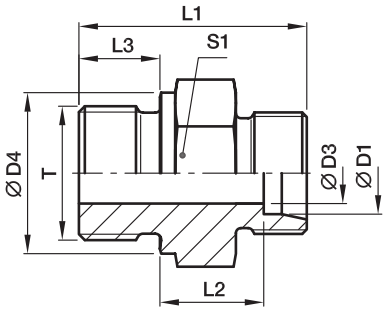

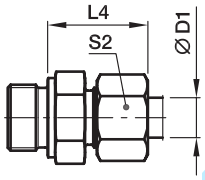

Series	D1	T	D3	D4	L1	L2	L3	L4	S1	S2	Weight g/1 piece	Order code*	PN (bar)[1] CF	71	MS
S[4])	06	G 1/4 A	4	18	32.0	13.0	12	28	19	17	35	**GE06SR**	400	400	250
	06	G 1/8 A	3	14	27.5	12.5	8	27	14	17	22	**GE06SR1/8**	400	400	
	06	G 3/8 A	4	22	34.5	15.5	12	30	22	17	57	**GE06SR3/8**	400	400	
	06	G 1/2 A	4	26	39.0	18.0	14	33	27	17	83	**GE06SR1/2**	400	400	
	08	G 1/4 A	5	18	34.0	15.0	12	30	19	19	41	**GE08SR**	400	400	250
	08	G 3/8 A	5	22	34.5	15.5	12	30	22	19	59	**GE08SR3/8**	400	400	
	08	G 1/2 A	5	26	39.0	18.0	14	33	27	19	100	**GE08SR1/2**	400	400	
	10	G 3/8 A	7	22	34.5	15.0	12	31	22	22	56	**GE10SR**	400	400	250
	10	G 1/4 A	5	18	34.0	14.5	12	31	19	22	43	**GE10SR1/4**	400	400	
	10	G 1/2 A	7	26	39.0	17.5	14	34	27	22	97	**GE10SR1/2**	400	400	
	12	G 3/8 A	8	22	36.5	17.0	12	33	22	24	62	**GE12SR**	400	400	250
	12	G 1/4 A	5	18	36.0	16.5	12	33	22	24	57	**GE12SR1/4**	400	400	
	12	G 1/2 A	8	26	39.0	17.5	14	34	27	24	57	**GE12SR1/2**	400	400	
	16	G 1/2 A	12	26	41.0	18.5	14	37	27	30	92	**GE16SR**	400	400	250
	16	G 3/8 A	8	22	38.5	18.0	12	36	27	30	83	**GE16SR3/8**	400	400	
	16	G 3/4 A	12	32	45.0	20.5	16	39	32	30	157	**GE16SR3/4**	400	400	
	20	G 3/4 A	16	32	47.0	20.5	16	42	32	36	151	**GE20SR**	400	400	250
	20	G 1/2 A	12	26	45.0	20.5	14	42	32	36	142	**GE20SR1/2**	400	400	
	20	G 1 A	16	39	51.0	22.5	18	44	41	36	273	**GE20SR1**	250	250	
	20	G 1 1/4 A	16	49	53.0	22.5	20	44	50	36	387	**GE20SR11/4**	160	160	
	25	G 1 A	20	39	53.0	23.0	18	47	41	46	267	**GE25SR**	250	250	160
	25	G 3/4 A	16	32	51.0	23.0	16	47	41	46	245	**GE25SR3/4**	250	250	
	25	G 1 1/4 A	20	49	55.0	23.0	20	47	50	46	422	**GE25SR11/4**	160	160	
	30	G 1 1/4 A	25	49	57.0	23.5	20	50	50	50	422	**GE30SR**	160	160	100
	30	G 1 A	20	39	55.0	23.5	18	50	46	50	337	**GE30SR1**	160	160	
	38	G 1 1/2 A	32	55	64.0	26.0	22	57	55	60	560	**GE38SR**	160	160	100
	38	G 1 1/4 A	25	49	62.0	26.0	20	57	55	60	578	**GE38SR11/4**	160	160	

[1]) Pressure shown = item deliverable

[4]) S = heavy series

$\frac{\text{PN (bar)}}{10}$ = PN (MPa)

Delivery without nut and ring. Information on ordering complete fittings see page I7.

*Please add the **suffixes** below according to the material/surface required.

Order code suffixes		
Material	Suffix surface and material	Example
Steel, zinc plated, Cr(VI)-free	CFX	GE16SRCFX
Stainless Steel	71X	GE16SR71X
Brass	MSX	GE16SRMSX

GE-R(KEG) Male stud connector

Male short BSPT taper thread (DIN 3852-2, type C) / EO 24° cone end

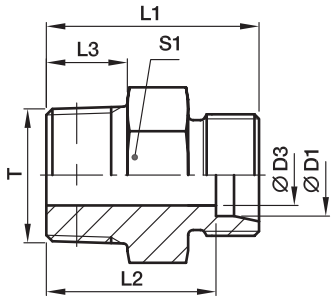

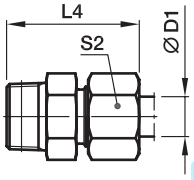

Series	D1	T	D3	L1	L2	L3	L4	S1	S2	Weight g/1 piece	Order code*	PN (bar)[1] CF	71	MS
LL[2])	04	R 1/8 tap.	3.0	20	16.0	8	26	11*	10	8	**GE04LLR**	100	100	63
	06	R 1/8 tap.	4.5	20	14.5	8	26	11*	12	8	**GE06LLR**	100	100	63
	08	R 1/8 tap.	6.0	22	16.5	8	28	12	14	10	**GE08LLR**	100	100	63
	08	R 1/4 tap.	6.0	26	20.5	12	32	14	14	18	**GE08LLR1/4**	100	100	63
	10	R 1/4 tap.	8.0	26	20.5	12	32	14	17	15	**GE10LLR**	100		63
	12	R 1/4 tap.	8.0	26	20.0	12	32	17	19	18	**GE12LLR**	100		63
	12	R 3/8 tap.	10.0	26	20.0	12	32	17	19	23	**GE12LLR3/8**	100		63
L[3])	06	R 1/8 tap.	4.0	22	15.0	8	30	12	14	11	**GE06LR1/8KEG**	315	315	
	06	R 1/4 tap.	4.0	27	20.0	12	35	17	14	24	**GE06LR1/4KEG**	315	315	200
	08	R 1/8 tap.	4.0	23	16.0	8	31	14	17	15	**GE08LR1/8KEG**	315	315	200
	08	R 1/4 tap.	6.0	27	20.0	12	35	17	17	22	**GE08LR1/4KEG**	315	315	
	10	R 1/4 tap.	7.0	28	21.0	12	36	17	19	24	**GE10LR1/4KEG**	315	315	
	12	R 1/4 tap.	7.0	29	22.0	12	37	19	22	53	**GE12LR1/4KEG**	315	315	200
	12	R 3/8 tap.	9.0	29	22.0	12	37	19	22	33	**GE12LR3/8KEG**	315	315	
	12	R 1/2 tap.	10.0	31	24.0	14	39	24	22	53	**GE12LR1/2KEG**	315	315	200
	15	R 3/8 tap.	9.0	30	23.0	12	38	24	27	49	**GE15LR3/8KEG**	315	315	200
	15	R 1/2 tap.	11.0	32	25.0	14	40	24	27	59	**GE15LR1/2KEG**	315	315	
	18	R 1/2 tap.	14.0	33	25.5	14	42	27	32	64	**GE18LR1/2KEG**	315	315	
	22	R 3/4 tap.	17.0	37	29.5	16	46	32	36	99	**GE22LR3/4KEG**	160	160	
	28	R 1 tap.	23.0	40	32.5	18	49	41	41	154	**GE28LR1KEG**	160	160	
	35	R 1 1/4 tap.	30.0	45	34.5	20	56	46	50	238	**GE35LR11/4KEG**	160	160	
	42	R 1 1/2 tap.	36.0	49	38.0	22	61	55	60	335	**GE42LR11/2KEG**	160	160	

[1]) Pressure shown = item deliverable

[2]) LL = very light series; [3]) L = light series

$\frac{\text{PN (bar)}}{10}$ = PN (MPa)

Delivery without nut and ring. Information on ordering complete fittings see page I7.

*) S1 = 12 for 1.4571

*Please add the **suffixes** below according to the material/surface required.

Order code suffixes		
Material	Suffix surface and material	Example
Steel, zinc plated, Cr(VI)-free	CFX	GE06LR1/4KEGCFX
Stainless Steel	71X	GE06LR1/4KEG71X
Brass	MSX	GE06LR1/4KEGMSX

GE-M Male stud connector

Male metric thread – metal sealing edge (ISO 9974) / EO 24° cone end

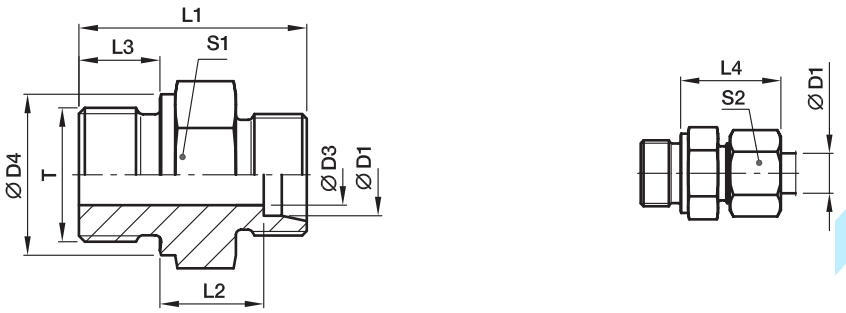

Series	D1	T	D3	D4	L1	L2	L3	L4	S1	S2	Weight g/1 piece	Order code*	PN (bar)[1] CF	71	MS
L[3])	06	M 10×1.0	4	14	23.5	8.5	8	23	14	14	13	**GE06LM**	315	315	200
	08	M 12×1.5	6	17	29.0	10.0	12	25	17	17	22	**GE08LM**	315	315	200
	10	M 14×1.5	7	19	30.0	11.0	12	26	19	19	31	**GE10LM**	315	315	200
	10	M 10×1.0	4	14	25.5	10.5	8	25	17	19	20	**GE10LM10X1**	315	315	
	10	M 12×1.5	6	17	30.0	11.0	12	26	17	19	25	**GE10LM12X1.5**	315	315	
	10	M 16×1.5	8	21	31.5	12.0	12	27	22	19	41	**GE10LM16X1.5**	315	315	
	10	M 18×1.5	8	23	31.5	12.5	12	27	24	19	50	**GE10LM18X1.5**	315	315	
	10	M 22×1.5	8	27	35.0	14.0	14	29	27	19	72	**GE10LM22X1.5**	315	315	
	12	M 14×1.5	7	19	30.0	11.0	12	26	19	22	30	**GE12LM14X1.5**	315	315	
	12	M 16×1.5	9	21	31.5	12.5	12	27	22	22	40	**GE12LM**	315	315	
	12	M 18×1.5	10	23	31.5	12.5	12	27	24	22	47	**GE12LM18X1.5**	315	315	
	12	M 22×1.5	10	27	35.0	14.0	14	29	27	22	76	**GE12LM22X1.5**	315	315	
	15	M 16×1.5	9	21	32.0	13.0	12	28	24	27	50	**GE15LM16X1.5**	250	250	
	15	M 18×1.5	11	23	32.5	13.5	12	29	24	27	52	**GE15LM**	250	250	160
	15	M 22×1.5	12	27	36.0	15.0	14	30	27	27	77	**GE15LM22X1.5**	250	250	
	18	M 18×1.5	11	23	33.5	14.0	12	30	27	32	68	**GE18LM18X1.5**	250	250	
	18	M 22×1.5	14	27	36.0	14.5	14	31	27	32	77	**GE18LM**	250	250	160
	22	M 22×1.5	14	27	38.0	16.5	14	33	32	36	92	**GE22LM22X1.5**	160	160	
	22	M 26×1.5	18	31	40.0	16.5	16	33	32	36	102	**GE22LM**	160	160	100
	28	M 33×2.0	23	39	43.0	17.5	18	34	41	41	168	**GE28LM**	160	160	100
	35	M 42×2.0	30	49	48.0	17.5	20	39	50	50	280	**GE35LM**	160	160	100
	42	M 48×2.0	36	55	52.0	19.0	22	42	55	60	354	**GE42LM**	160	160	100
S[4])	06	M 12×1.5	4	17	32.0	13.0	12	28	17	17	30	**GE06SM**	400	400	250
	06	M 14×1.5	4	19	34.0	15.0	12	30	19	17	42	**GE06SM14X1.5**	400	400	
	08	M 14×1.5	5	19	34.0	15.0	12	30	19	19	43	**GE08SM**	400	400	250
	10	M 16×1.5	7	21	34.5	15.0	12	31	22	22	54	**GE10SM**	400	400	250
	12	M 18×1.5	8	23	36.5	17.0	12	33	24	24	72	**GE12SM**	400	400	250
	12	M 14×1.5	5	19	36.0	16.5	12	33	22	24	60	**GE12SM14X1.5**	400	400	
	12	M 22×1.5	8	27	39.0	17.5	14	34	27	24	103	**GE12SM22X1.5**	400	400	
	16	M 18×1.5	8	23	38.5	18.0	12	36	27	30	88	**GE16SM18X1.5**	400	400	
	16	M 22×1.5	12	27	41.0	18.5	14	37	27	30	97	**GE16SM**	400	400	250
	20	M 27×2.0	16	32	47.0	20.5	16	42	32	36	155	**GE20SM**	400	400	250
	25	M 33×2.0	20	39	53.0	23.0	18	47	41	46	268	**GE25SM**	250	250	160
	30	M 42×2.0	25	49	57.0	23.5	20	50	50	50	421	**GE30SM**	160	160	100
	38	M 48×2.0	32	55	64.0	26.0	22	57	55	60	568	**GE38SM**	160	160	100

[1]) Pressure shown = item deliverable

[3]) L = light series; [4]) S = heavy series

$\frac{\text{PN (bar)}}{10}$ = PN (MPa)

Delivery without nut and ring. Information on ordering complete fittings see page I7.

*Please add the **suffixes** below according to the material/surface required.

Order code suffixes		
Material	Suffix surface and material	Example
Steel, zinc plated, Cr(VI)-free	CFX	GE16SMCFX
Stainless Steel	71X	GE16SM71X
Brass	MSX	GE16SMMSX

GE-M(KEG) Male stud connector

Male short metric taper thread (DIN 3852-1, type C) / EO 24° cone end

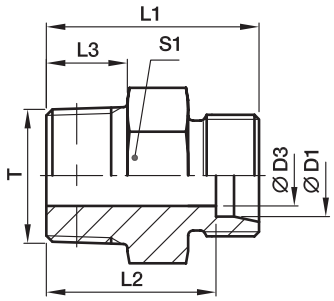

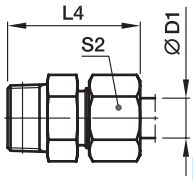

Series	D1	T	D3	L1	L2	L3	L4	S1	S2	Weight g/1 piece	Order code*	PN (bar)[1] CF	71	MS
LL[2])	04	M 06×1.0 tap.	2.0	20	16.0	8	26	9*	10	5	**GE04LLM6X1KEG**	100		
	04	M 08×1.0 tap.	3.0	20	16.0	8	26	10*	10	7	**GE04LLM**	100	100	63
	06	M 10×1.0 tap.	4.5	20	14.5	8	26	11*	12	9	**GE06LLM**	100	100	63
	06	M 08×1.0 tap.	3.5	20	14.5	8	26	11*	12	9	**GE06LLM8X1KEG**	100		
	08	M 10×1.0 tap.	6.0	22	16.5	8	28	12*	14	10	**GE08LLM**	100	100	63

[1]) Pressure shown = item deliverable

[2]) LL = very light series

$\frac{\text{PN (bar)}}{10}$ = PN (MPa)

Delivery without nut and ring. Information on ordering complete fittings see page I7.

***S1=SW12 in 1.4571**

*Please add the **suffixes** below according to the material/surface required.

Order code suffixes		
Material	Suffix surface and material	Example
Steel, zinc plated, Cr(VI)-free	CFX	GE06LLMCFX
Stainless Steel	71X	GE06LLM71X
Brass	MSX	GE06LLMMSX

kovaz.si

GE-UNF/UN Male stud connector

Male UNF/UN thread – O-ring (ISO 11926) / EO 24° cone end

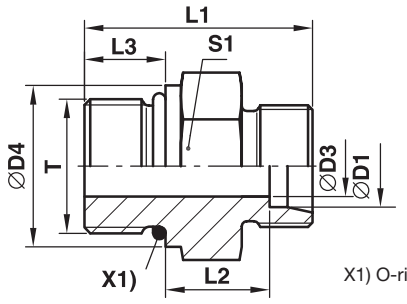

X1) O-ring OR

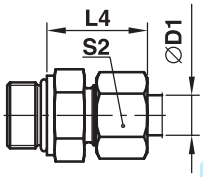

Series	D1	T	D3	D4	L1	L2	L3	L4	S1	S2	Weight g/1 piece	Order code*	PN (bar)[1] CF	PN (bar)[1] 71
L[3]	08	7/16-20UNF-2A	5.0	–	26	10.0	9.0	25	17	17	21	**GE08L7/16UNFOMD**	315	315
	10	7/16-20UNF-2A	5.0	–	27	11.0	9.0	26	17	19	23	**GE10L7/16UNFOMD**	315	315
	12	9/16-18UNF-2A	7.0	–	28	11.0	10.0	26	19	22	32	**GE12L9/16UNFOMD**	315	315
	12	3/4-16UNF-2A	10.0	–	31	13.0	11.0	28	24	22	52	**GE12L3/4UNFOMD**	315	315
	12	7/8-14UNF-2A	10.0	–	34	14.3	12.7	29	27	22	77	**GE12L7/8UNFOMD**	315	315
	15	3/4-16UNF-2A	11.0	–	32	14.0	11.0	29	24	27	57	**GE15L3/4UNFOMD**	315	315
	15	7/8-14UNF-2A	12.0	–	35	15.3	12.7	30	27	27	81	**GE15L7/8UNFOMD**	315	315
	18	3/4-16UNF-2A	11.0	23.9	33	14.5	11.0	31	27	32	68	**GE18L3/4UNFOMD**	315	315
	18	7/8-14UNF-2A	14.0	–	35	14.8	12.7	31	27	32	72	**GE18L7/8UNFOMD**	315	315
	22	7/8-14UNF-2A	14.0	26.9	37	16.8	12.7	33	32	36	94	**GE22L7/8UNFOMD**	160	160
	22	1 1/16-12UN-2A	18.0	–	39	16.5	15.0	33	32	36	103	**GE22L11/16UNOMD**	160	160
	22	1 5/16-12UN-2A	19.0	–	40	17.5	15.0	34	41	36	163	**GE22L15/16UNOMD**	160	160
	28	1 1/16-12UN-2A	18.0	33.3	40	17.5	15.0	34	41	41	152	**GE28L11/16UNOMD**	160	160
	28	1 5/16-12UN-2A	23.0	–	40	17.5	15.0	34	41	41	163	**GE28L15/16UNOMD**	160	160
	35	1 5/16-12UN-2A	23.0	39.6	43	17.5	15.0	39	46	50	222	**GE35L15/16UNOMD**	160	160
	35	1 5/8-12UN-2A	29.0	–	43	17.5	15.0	39	50	50	257	**GE35L15/8UNOMD**	160	160
	42	1 5/8-12UN-2A	29.0	47.7	45	19.0	15.0	42	55	60	339	**GE42L15/8UNOMD**	160	160
S[4]	08	7/16-20UNF-2A	4.0	–	31	13.0	11.0	30	17	19	33	**GE08S7/16UNFOMD**	630	630
	10	9/16-18UNF-2A	6.0	–	32	12.5	12.0	31	19	22	42	**GE10S9/16UNFOMD**	630	630
	12	9/16-18UNF-2A	6.0	19.0	32	12.5	12.0	31	22	24	50	**GE12S9/16UNFOMD**	630	630
	12	3/4-16UNF-2A	8.0	–	36	14.5	14.0	34	24	24	73	**GE12S3/4UNFOMD**	630	630
	16	3/4-16UNF-2A	10.0	–	35	12.5	14.0	34	24	30	90	**GE16S3/4UNFOMD**	400	400
	16	7/8-14UNF-2A	12.0	–	40	15.5	16.0	37	27	30	95	**GE16S7/8UNFOMD**	400	400
	20	3/4-16UNF-2A	10.0	23.9	42	17.5	14.0	42	32	36	132	**GE20S3/4UNFOMD**	400	400
	20	7/8-14UNF-2A	12.0	26.9	44	17.5	16.0	42	32	36	141	**GE20S7/8UNFOMD**	400	400
	20	1 1/16-12UN-2A	16.0	–	46	17.0	18.5	42	32	36	163	**GE20S11/16UNOMD**	400	400
	25	1 1/16-12UN-2A	16.0	33.3	50	19.5	18.5	47	36	46	206	**GE25S11/16UNOMD**	400	400
	25	1 5/16-12UN-2A	20.0	–	50	19.5	18.5	47	41	46	258	**GE25S15/16UNOMD**	400	400
	30	1 5/16-12UN-2A	20.0	39.6	52	20.0	18.5	50	46	50	327	**GE30S15/16UNOMD**	400	400
	30	1 5/8-12UN-2A	24.0	–	52	20.0	18.5	50	50	50	422	**GE30S15/8UNOMD**	400	400
	38	1 5/8-12UN-2A	24.0	47.7	57	22.5	18.5	57	55	60	554	**GE38S15/8UNOMD**	315	315

[1]) Pressure shown = item deliverable

[3]) L = light series; [4]) S = heavy series

$\frac{\text{PN (bar)}}{10}$ = PN (MPa)

Delivery without nut and ring. Information on ordering complete fittings or alternative sealing materials see page I7.

*Please add the **suffixes** below according to the material/surface required.

Order code suffixes			
Material	Suffix surface and material	Example	Standard sealing material (no additonal. suffix needed)
Steel, zinc plated, Cr(VI)-free	CF	GE16S3/4UNFOMDCF	NBR
Stainless Steel	71	GE16S3/4UNFOMD71	VIT

GE-NPT Male stud connector

Male NPT thread (SAE J476) / EO 24° cone end

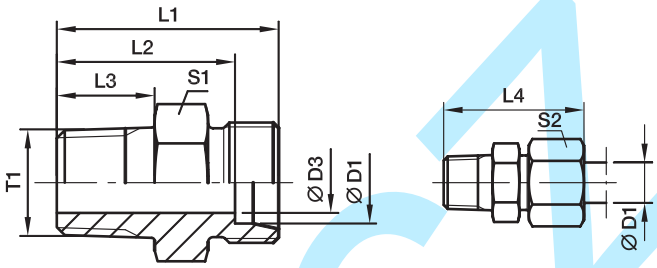

Series	D1	T1	D3	L1	L2	L3	L4	S1	S2	Weight g/1 piece	Order code*	PN (bar)[1] CF	71	MS
LL[2])	04	1/8-27 NPT	3.0	22.0	18.0	10.0	28	11*	10	9	**GE04LL1/8NPT**	100	100	
	06	1/8-27 NPT	4.5	22.0	16.5	10.0	28	11*	12	9	**GE06LL1/8NPT**	100	100	63
	08	1/8-27 NPT	5.0	24.0	18.5	10.0	30	12	14	11	**GE08LL1/8NPT**	100	100	63
L[3])	06	1/8-27 NPT	4.0	24.0	17.0	10.0	32	12	14	12	**GE06L1/8NPT**	315	315	200
	06	1/4-18 NPT	4.0	30.0	23.0	14.5	38	17	14	27	**GE06L1/4NPT**	315	315	200
	06	3/8-18 NPT	4.0	30.0	23.0	14.5	38	19	14	32	**GE06L3/8NPT**	315	315	
	06	1/2-14 NPT	4.0	36.0	29.0	19.5	44	22	14	53	**GE06L1/2NPT**	315	315	
	08	1/8-27 NPT	4.0	25.0	18.0	10.0	33	14	17	16	**GE08L1/8NPT**	315	315	
	08	1/4-18 NPT	6.0	30.0	23.0	14.5	38	17	17	25	**GE08L1/4NPT**	315	315	200
	08	3/8-18 NPT	6.0	30.0	23.0	14.5	38	19	17	34	**GE08L3/8NPT**	315	315	
	08	1/2-14 NPT	6.0	36.0	29.0	19.5	44	22	17	54	**GE08L1/2NPT**	315	315	
	10	1/8-27 NPT	4.0	25.0	18.0	10.0	33	17	19	19	**GE10L1/8NPT**	315	315	
	10	1/4-18 NPT	7.0	31.0	24.0	14.5	39	17	19	25	**GE10L1/4NPT**	315	315	200
	10	3/8-18 NPT	7.0	32.0	25.0	14.5	40	19	19	40	**GE10L3/8NPT**	315	315	
	10	1/2-14 NPT	8.0	37.0	30.0	19.5	45	22	19	54	**GE10L1/2NPT**	315	315	
	10	3/4-14 NPT	8.0	38.0	31.0	19.5	46	30	19	93	**GE10L3/4NPT**	315	315	
	12	1/8-27 NPT	4.0	26.0	19.0	10.0	34	19	22	52	**GE12L1/8NPT**	315	315	
	12	1/4-18 NPT	7.0	32.0	25.0	14.5	40	19	22	31	**GE12L1/4NPT**	315	315	200
	12	3/8-18 NPT	8.0	32.0	25.0	14.5	40	19	22	37	**GE12L3/8NPT**	315	315	200
	12	1/2-14 NPT	10.0	37.0	30.0	19.5	45	22	22	62	**GE12L1/2NPT**	315	315	200
	15	3/8-18 NPT	8.0	33.0	26.0	14.5	41	24	27	53	**GE15L3/8NPT**	315	315	
	15	1/2-14 NPT	12.0	38.0	31.0	19.5	46	24	27	63	**GE15L1/2NPT**	315	315	200
	15	3/4-14 NPT	12.0	39.0	32.0	19.5	47	30	27	112	**GE15L3/4NPT**	315	315	
	15	1-11.5 NPT	12.0	45.0	38.0	24.5	53	36	27	158	**GE15L1NPT**	315	315	
	18	3/8-18 NPT	8.0	34.0	26.5	14.5	43	27	32	69	**GE18L3/8NPT**	315	315	
	18	1/2-14 NPT	12.0	39.0	31.5	19.5	48	27	32	79	**GE18L1/2NPT**	315	315	200
	18	3/4-14 NPT	15.0	39.0	31.5	19.5	48	30	32	104	**GE18L3/4NPT**	315	315	
	18	1-11.5 NPT	15.0	45.0	37.5	24.5	54	36	32	159	**GE18L1NPT**	315	315	
	22	3/8-18 NPT	8.0	36.5	29.0	14.5	45	32	36	91	**GE22L3/8NPT**	160	160	
	22	1/2-14 NPT	12.0	41.0	33.5	19.5	50	32	36	96	**GE22L1/2NPT**	160	160	
	22	3/4-14 NPT	16.0	41.0	33.5	19.5	50	32	36	108	**GE22L3/4NPT**	160	160	100
	22	1-11.5 NPT	19.0	47.0	39.5	24.5	56	36	36	174	**GE22L1NPT**	160	160	
	28	3/4-14 NPT	16.0	42.0	34.5	19.5	51	41	41	157	**GE28L3/4NPT**	160	160	
	28	1-11.5 NPT	21.0	47.0	39.5	24.5	56	41	41	197	**GE28L1NPT**	160	160	100
	28	1 1/4-11.5 NPT	24.0	49.0	41.5	25.0	58	46	41	266	**GE28L11/4NPT**	160	160	
	35	1-11.5 NPT	22.0	50.0	39.5	24.5	61	46	50	280	**GE35L1NPT**	160	160	
	35	1 1/4-11.5 NPT	28.0	51.0	40.5	25.0	62	46	50	285	**GE35L11/4NPT**	160	160	
	42	1 1/4-11.5 NPT	28.0	53.0	42.0	25.0	65	55	60	382	**GE42L11/4NPT**	160	160	
	42	1 1/2-11.5 NPT	36.0	53.0	42.0	26.0	65	55	60	377	**GE42L11/2NPT**	160	160	

[1]) Pressure shown = item deliverable

[2]) LL = very light series; [3]) L = light series

$\frac{\text{PN (bar)}}{10}$ = PN (MPa)

Delivery without nut and ring. Information on ordering complete fittings see page I7.

***S1=SW12 in 1.4571**

*Please add the **suffixes** below according to the material/surface required.

Order code suffixes		
Material	Suffix surface and material	Example
Steel, zinc plated, Cr(VI)-free	CFX	GE18L1/2NPTCFX
Stainless Steel	71X	GE18L1/2NPT71X
Brass	MSX	GE18L1/2NPTMSX

GE-NPT Male stud connector

Male NPT thread (SAE J476) / EO 24° cone end

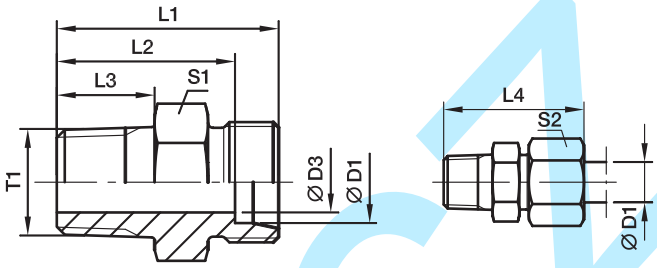

Series	D1	T1	D3	L1	L2	L3	L4	S1	S2	Weight g/1 piece	Order code*	PN (bar)[1] CF	71	MS
S[4])	06	1/8-27 NPT	4	28	21.0	10.0	36	14	17	21	**GE06S1/8NPT**	630	630	
	06	1/4-18 NPT	4	35	28.0	14.5	43	17	17	37	**GE06S1/4NPT**	630	630	400
	06	3/8-18 NPT	4	33	26.0	14.5	41	19	17	40	**GE06S3/8NPT**	630	630	
	06	1/2-14 NPT	4	42	35.0	19.5	50	22	17	71	**GE06S1/2NPT**	630	630	
	08	1/4-18 NPT	5	35	28.0	14.5	43	17	19	38	**GE08S1/4NPT**	630	630	400
	08	3/8-18 NPT	5	35	28.0	14.5	43	19	19	46	**GE08S3/8NPT**	630	630	
	08	1/2-14 NPT	5	42	35.0	19.5	50	22	19	73	**GE08S1/2NPT**	630	630	400
	10	1/4-18 NPT	5	35	27.5	14.5	44	19	22	45	**GE10S1/4NPT**	630	630	
	10	3/8-18 NPT	7	35	27.5	14.5	44	19	22	49	**GE10S3/8NPT**	630	630	400
	10	1/2-14 NPT	7	42	34.5	19.5	51	22	22	73	**GE10S1/2NPT**	630	630	400
	10	3/4-14 NPT	7	44	36.5	19.5	53	30	22	125	**GE10S3/4NPT**	630	630	
	12	1/4-18 NPT	5	37	29.5	14.5	46	22	24	57	**GE12S1/4NPT**	630	630	
	12	3/8-18 NPT	8	37	29.5	14.5	46	22	24	62	**GE12S3/8NPT**	630	630	400
	12	1/2-14 NPT	8	42	34.5	19.5	51	22	24	83	**GE12S1/2NPT**	630	630	400
	12	3/4-14 NPT	8	44	36.5	19.5	53	30	24	126	**GE12S3/4NPT**	630	630	
	16	3/8-18 NPT	8	39	30.5	14.5	49	27	30	84	**GE16S3/8NPT**	400	400	
	16	1/2-14 NPT	12	44	39.5	19.5	58	27	30	97	**GE16S1/2NPT**	400	400	250
	16	3/4-14 NPT	12	46	37.5	19.5	56	30	30	130	**GE16S3/4NPT**	400	400	
	16	1-11.5 NPT	12	51	42.5	24.5	61	36	30	178	**GE16S1NPT**	400	400	
	20	1/2-14 NPT	12	48	37.5	19.5	59	32	36	144	**GE20S1/2NPT**	400	400	
	20	3/4-14 NPT	16	48	37.5	19.5	59	32	36	149	**GE20S3/4NPT**	400	400	250
	20	1-11.5 NPT	16	55	44.5	24.5	66	36	36	243	**GE20S1NPT**	400	400	
	25	3/4-14 NPT	16	52	40.0	19.5	64	41	46	240	**GE25S3/4NPT**	400	400	
	25	1-11.5 NPT	20	57	45.0	24.5	69	41	46	278	**GE25S1NPT**	400	400	
	25	1 1/4-11.5 NPT	20	58	46.0	25.0	70	46	46	396	**GE25S11/4NPT**	400	400	
	25	1 1/2-11.5 NPT	20	61	49.0	26.0	73	50	46	469	**GE25S11/2NPT**	400	400	
	30	3/4-14 NPT	16	54	40.5	19.5	67	46	50	307	**GE30S3/4NPT**	400	400	
	30	1-11.5 NPT	20	59	45.5	24.5	72	46	50	343	**GE30S1NPT**	400	400	100
	30	1 1/4-11.5 NPT	25	60	46.5	25.0	73	46	50	397	**GE30S11/4NPT**	400	400	
	30	1 1/2-11.5 NPT	25	60	46.5	26.0	73	50	50	440	**GE30S11/2NPT**	400	400	
	38	1-11.5 NPT	22	64	48.0	24.5	79	55	60	510	**GE38S1NPT**	315	315	
	38	1 1/4-11.5 NPT	25	65	49.0	25.0	80	55	60	535	**GE38S11/4NPT**	315	315	
	38	1 1/2-11.5 NPT	32	65	49.0	26.0	80	55	60	571	**GE38S11/2NPT**	315	315	

[1]) Pressure shown = item deliverable

[4]) S = heavy series

$\frac{\text{PN (bar)}}{10}$ = PN (MPa)

Delivery without nut and ring. Information on ordering complete fittings see page I7.

*Please add the **suffixes** below according to the material/surface required.

Order code suffixes		
Material	Suffix surface and material	Example
Steel, zinc plated, Cr(VI)-free	CFX	GE16S1/2NPTCFX
Stainless Steel	71X	GE16S1/2NPT71X
Brass	MSX	GE16S1/2NPTMSX

EGEO Swivel connector

Male metric thread – O-ring (ISO 6149) / EO 24° DKO swivel

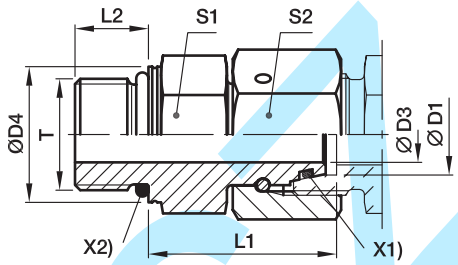

X2) O-ring OR X1) O-ring OR

Series	D1	T	D3	D4	L1	L2	S1	S2	Weight g/1 piece	Order code*	PN (bar)[1] CF
L[3])	06	M 10×1.0	2.5	13.8	24.5	8.5	14	14	29	**EGEO06LM**	500
	08	M 12×1.5	4.0	16.8	26.5	11.0	17	17	43	**EGEO08LM**	500
	10	M 14×1.5	6.0	18.8	27.5	11.0	19	19	57	**EGEO10LM**	500
	12	M 16×1.5	8.0	21.8	30.5	11.5	22	22	85	**EGEO12LM**	400
	15	M 18×1.5	10.0	23.8	31.5	12.5	24	27	115	**EGEO15LM**	400
	18	M 22×1.5	13.0	26.8	31.5	13.0	27	32	152	**EGEO18LM**	400
	22	M 27×2.0	17.0	31.8	32.5	16.0	32	36	207	**EGEO22LM27X2**	250
	28	M 33×2.0	22.0	40.8	35.0	16.0	41	41	294	**EGEO28LM**	250
	35	M 42×2.0	28.0	49.8	42.5	16.0	50	50	516	**EGEO35LM**	250
	42	M 48×2.0	34.0	54.8	46.5	17.5	55	60	718	**EGEO42LM**	250
S[4])	06	M 12×1.5	2.5	16.8	27.0	11.0	17	17	49	**EGEO06SM**	800
	08	M 14×1.5	4.0	18.8	29.5	11.0	19	19	69	**EGEO08SM**	800
	10	M 16×1.5	6.0	21.8	32.0	12.5	22	22	96	**EGEO10SM**	800
	12	M 18×1.5	8.0	23.8	34.0	14.0	24	24	116	**EGEO12SM**	630
	16	M 22×1.5	11.0	26.8	37.0	15.0	27	30	179	**EGEO16SM**	630
	20	M 27×2.0	14.0	31.8	43.0	18.5	32	36	280	**EGEO20SM**	420
	25	M 33×2.0	18.0	40.8	48.0	18.5	41	46	502	**EGEO25SM**	420
	30	M 42×2.0	23.0	49.8	51.0	19.0	50	50	697	**EGEO30SM**	420
	38	M 48×2.0	30.0	54.8	60.0	21.5	55	60	965	**EGEO38SM**	420

[1]) Pressure shown = item deliverable

[3]) L = light series; [4]) S = heavy series

$\frac{PN\ (bar)}{10}$ = PN (MPa)

Information on ordering alternative sealing materials see page I7.

*Please add the **suffixes** below according to the material/surface required.

Order code suffixes			
Material	Suffix surface and material	Example	Standard sealing material (no additonal. suffix needed)
Steel, zinc plated, Cr(VI)-free	CF	EGEO16SMCF	NBR

EGE-M-ED Swivel connector

Male metric thread – ED-seal (ISO 9974) / EO 24° DKO swivel

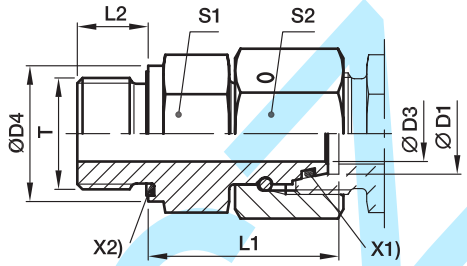

X2) Eolastic-sealing ED X1) O-ring OR

Series	D1	T	D3	D4	L1	L2	S1	S2	Weight g/1 piece	Order code*	PN (bar)[1] CF	PN (bar)[1] 71
L[3])	06	M 10×1.0	2.5	14	24.5	8	14	14	27	**EGE06LMED**	500	315
	08	M 12×1.5	4.0	17	26.5	12	17	17	45	**EGE08LMED**	500	315
	10	M 14×1.5	6.0	19	27.5	12	19	19	57	**EGE10LMED**	500	315
	12	M 16×1.5	8.0	22	30.5	12	22	22	82	**EGE12LMED**	400	315
	12	M 22×1.5	8.0	27	27.0	14	27	22	92	**EGE12LM22X1.5ED**	400	315
	15	M 18×1.5	10.0	24	31.5	12	24	27	113	**EGE15LMED**	400	315
	15	M 22×1.5	10.0	27	32.0	14	27	27	142	**EGE15LM22X1.5ED**	400	315
	18	M 22×1.5	13.0	27	31.5	14	27	32	148	**EGE18LMED**	400	315
	22	M 26×1.5	17.0	32	32.5	16	32	36	203	**EGE22LMED**	250	160
	28	M 33×2.0	22.0	40	35.0	18	41	41	289	**EGE28LMED**	250	160
	35	M 42×2.0	28.0	50	42.5	20	50	50	511	**EGE35LMED**	250	160
	42	M 48×2.0	34.0	55	46.5	22	55	60	711	**EGE42LMED**	250	160
S[4])	06	M 12×1.5	2.5	17	27.0	12	17	17	47	**EGE06SMED**	800	630
	08	M 14×1.5	4.0	19	29.5	12	19	19	65	**EGE08SMED**	800	630
	10	M 16×1.5	6.0	22	32.0	12	22	22	91	**EGE10SMED**	800	630
	12	M 18×1.5	8.0	24	34.0	12	24	24	112	**EGE12SMED**	630	630
	16	M 22×1.5	11.0	27	37.0	14	27	30	174	**EGE16SMED**	630	400
	20	M 27×2.0	14.0	32	43.0	16	32	36	274	**EGE20SMED**	420	400
	25	M 33×2.0	18.0	40	48.0	18	41	46	497	**EGE25SMED**	420	400
	30	M 42×2.0	23.0	50	51.0	20	50	50	691	**EGE30SMED**	420	400
	38	M 48×2.0	30.0	55	60.0	22	55	60	957	**EGE38SMED**	420	315

[1]) Pressure shown = item deliverable

[3]) L = light series; [4]) S = heavy series

$\frac{\text{PN (bar)}}{10}$ = PN (MPa)

Information on ordering alternative sealing materials see page I7.

*Please add the **suffixes** below according to the material/surface required

Order code suffixes			
Material	Suffix surface and material	Example	Standard sealing material (no additonal. suffix needed)
Steel, zinc plated, Cr(VI)-free	CF	EGE16SMEDCF	NBR
Stainless Steel	71	EGE16SMED71	VIT

EGE-R-ED Swivel connector

Male BSPP thread – ED-seal (ISO 1179) / EO 24° DKO swivel

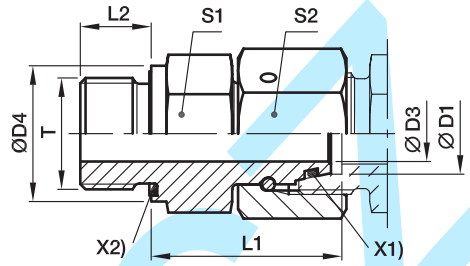

X2) Eolastic-sealing ED X1) O-ring OR

Series	D1	T	D3	D4	L1	L2	S1	S2	Weight g/1 piece	Order code*	PN (bar)[1] CF	PN (bar)[1] 71
L[3]	06	G 1/8 A	2.5	14	24.5	8	14	14	27	**EGE06LRED**	500	315
	08	G 1/4 A	4.0	19	29.5	12	19	17	28	**EGE08LRED**	500	315
	10	G 1/4 A	6.0	19	27.5	12	19	19	54	**EGE10LRED**	500	315
	10	G 3/8 A	6.0	22	29.0	12	22	19	70	**EGE10LR3/8ED**	400	315
	12	G 3/8 A	8.0	22	34.0	12	22	22	95	**EGE12LRED**	400	315
	12	G 1/4 A	6.0	19	27.5	12	19	22	65	**EGE12LR1/4ED**	400	315
	12	G 1/2 A	8.0	27	29.5	14	27	22	114	**EGE12LR1/2ED**	400	315
	15	G 1/2 A	10.0	27	32.0	14	27	27	137	**EGE15LRED**	400	315
	18	G 1/2 A	13.0	27	31.5	14	27	32	143	**EGE18LRED**	400	315
	18	G 3/4 A	13.0	32	29.5	16	32	32	182	**EGE18LR3/4ED**	250	160
	22	G 3/4 A	17.0	32	32.5	16	32	36	200	**EGE22LRED**	250	160
	28	G 1 A	22.0	40	35.0	18	41	41	289	**EGE28LRED**	250	160
	35	G 1 1/4 A	28.0	50	42.5	20	50	50	500	**EGE35LRED**	250	160
	42	G 1 1/2 A	34.0	55	46.5	22	55	60	718	**EGE42LRED**	250	160
S[4]	06	G 1/4 A	2.5	19	27.0	12	19	17	53	**EGE06SRED**	800	630
	08	G 1/4 A	4.0	19	29.5	12	19	19	64	**EGE08SRED**	800	630
	10	G 3/8 A	6.0	22	32.0	12	22	22	93	**EGE10SRED**	800	630
	12	G 3/8 A	8.0	22	34.0	12	22	24	100	**EGE12SRED**	630	630
	12	G 1/4 A	5.0	19	31.5	12	19	24	140	**EGE12SR1/4ED**	630	630
	12	G 1/2 A	8.0	27	35.0	14	27	24	140	**EGE12SR1/2ED**	630	630
	16	G 1/2 A	11.0	27	37.0	14	27	30	170	**EGE16SRED**	630	400
	20	G 3/4 A	14.0	32	43.0	16	32	36	273	**EGE20SRED**	420	400
	25	G 1 A	18.0	40	48.0	18	41	46	493	**EGE25SRED**	420	400
	30	G 1 1/4 A	23.0	50	51.0	20	50	50	691	**EGE30SRED**	420	400
	38	G 1 1/2 A	30.0	55	60.0	22	55	60	934	**EGE38SRED**	420	315

[1]) Pressure shown = item deliverable

[3]) L = light series; [4]) S = heavy series

$\frac{\text{PN (bar)}}{10}$ = PN (MPa)

Information on ordering alternative sealing materials see page I7.

*Please add the **suffixes** below according to the material/surface required.

Order code suffixes			
Material	Suffix surface and material	Example	Standard sealing material (no additonal. suffix needed)
Steel, zinc plated, Cr(VI)-free	CF	EGE16SREDCF	NBR
Stainless Steel	71	EGE16SRED71	VIT

EVGE-M-ED Standpipe connector

Male metric thread – ED (ISO 9974) / EO standpipe adjustable

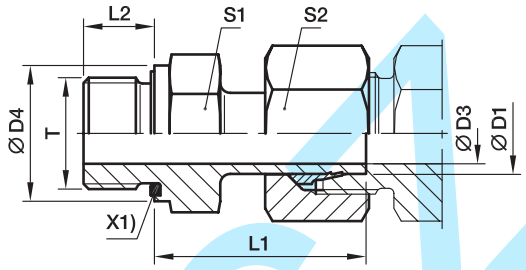

X1) Eolastic-sealing ED

Pre-assembled nut and ring.
Final assembly (in appropriate body) at least 1/4 turn beyond the point of clearly perceptible resistance.

Series	D1	T	D3	D4	L1	L2	S1	S2	Weight g/1 piece	Order code*	PN (bar)[1] CF	PN (bar)[1] 71
L[3])	06	M 10×1.0	3.5	14	24.5	8	14	14	24	**EVGE06LMED**	315	315
	08	M 12×1.5	5.5	17	26.5	12	17	17	38	**EVGE08LMED**	315	315
	10	M 14×1.5	7.0	19	27.5	12	19	19	49	**EVGE10LMED**	315	315
	12	M 16×1.5	9.0	22	30.0	12	22	22	67	**EVGE12LMED**	315	315
	15	M 18×1.5	11.0	24	30.5	12	24	27	95	**EVGE15LMED**	315	315
	18	M 22×1.5	14.0	27	31.5	14	27	32	137	**EVGE18LMED**	315	315
	22	M 26×1.5	18.0	32	32.5	16	32	36	183	**EVGE22LMED**	160	160
	28	M 33×2.0	23.0	40	35.0	18	41	41	264	**EVGE28LMED**	160	160
	35	M 42×2.0	29.5	50	42.5	20	50	50	444	**EVGE35LMED**	160	160
	42	M 48×2.0	35.5	55	46.5	22	55	60	614	**EVGE42LMED**	160	160
S[4])	06	M 12×1.5	3.5	17	27.0	12	17	17	43	**EVGE06SMED**	630	630
	08	M 14×1.5	4.5	19	29.5	12	19	19	59	**EVGE08SMED**	630	630
	10	M 16×1.5	6.5	22	32.0	12	22	22	82	**EVGE10SMED**	630	630
	12	M 18×1.5	7.5	24	34.0	12	24	24	104	**EVGE12SMED**	630	630
	16	M 22×1.5	11.5	27	37.0	14	27	30	162	**EVGE16SMED**	400	400
	20	M 27×2.0	15.5	32	43.0	16	32	36	254	**EVGE20SMED**	400	400
	25	M 33×2.0	18.0	40	48.0	18	41	46	493	**EVGE25SMED**	400	400
	30	M 42×2.0	23.5	50	51.0	20	50	50	654	**EVGE30SMED**	400	400
	38	M 48×2.0	29.0	55	60.0	22	55	60	962	**EVGE38SMED**	315	315

[1]) Pressure shown = item deliverable

[3]) L = light series; [4]) S = heavy series

$\frac{PN\ (bar)}{10} = PN\ (MPa)$

The use of the swivel nut fitting EGE is to be prefered (see page I60).

Information on ordering alternative sealing materials see page I7.

*Please add the **suffixes** below according to the material/surface required.

Order code suffixes			
Material	Suffix surface and material	Example	Standard sealing material (no additonal. suffix needed)
Steel, zinc plated, Cr(VI)-free	CF	EVGE16SMEDCF	NBR
Stainless Steel	71	EVGE16SMED71	VIT

Kovalcz

EVGE-R-ED Standpipe connector

Male BSPP thread – ED-seal (ISO 1179) / EO standpipe adjustable

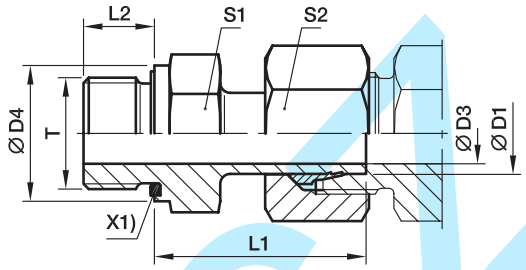

X1) Eolastic-sealing ED

Pre-assembled nut and ring.
Final assembly (in appropriate body) at least 1/4 turn beyond the point of clearly perceptible resistance.

Series	D1	T	D3	D4	L1	L2	S1	S2	Weight g/1 piece	Order code*	PN (bar)[1] CF	71	MS
L[3])	06	G 1/8 A	3.5	14	24.5	8	14	14	24	**EVGE06LRED**	315	315	200
	08	G 1/4 A	4.5	19	29.5	12	19	17	52	**EVGE08LRED**	315	315	200
	10	G 1/4 A	7.0	19	27.5	12	19	19	47	**EVGE10LRED**	315	315	200
	12	G 3/8 A	7.5	22	34.0	12	22	22	87	**EVGE12LRED**	315	315	200
	12	G 1/4 A	7.0	19	28.5	12	19	22	61	**EVGE12LR1/4ED**	315		
	12	G 1/2 A	7.5	27	34.5	14	27	22	121	**EVGE12LR1/2ED**	315	315	
	15	G 1/2 A	11.0	27	31.0	14	27	27	114	**EVGE15LRED**	315	315	200
	18	G 1/2 A	14.0	27	31.5	14	27	32	132	**EVGE18LRED**	315	315	200
	22	G 3/4 A	18.0	32	32.5	16	32	36	183	**EVGE22LRED**	160	160	100
	28	G 1 A	23.0	40	35.0	18	41	41	262	**EVGE28LRED**	160	160	
	35	G 1 1/4 A	29.5	50	42.5	20	50	50	436	**EVGE35LRED**	160	160	
	42	G 1 1/2 A	35.5	55	46.5	22	55	60	615	**EVGE42LRED**	160	160	
S[4])	06	G 1/4 A	3.5	19	27.0	12	19	17	48	**EVGE06SRED**	630	630	
	08	G 1/4 A	4.5	19	29.5	12	19	19	57	**EVGE08SRED**	630	630	
	10	G 3/8 A	6.5	22	32.0	12	22	22	84	**EVGE10SRED**	630	630	
	12	G 3/8 A	7.5	22	34.0	12	22	24	95	**EVGE12SRED**	630	630	
	12	G 1/2 A	7.5	27	34.5	14	27	24	130	**EVGE12SR1/2ED**	630	630	
	16	G 1/2 A	11.5	27	37.0	14	27	30	158	**EVGE16SRED**	400	400	
	16	G 3/4 A	11.5	32	39.0	16	32	30	222	**EVGE16SR3/4ED**	400		
	20	G 3/4 A	15.5	32	43.0	16	32	36	254	**EVGE20SRED**	400	400	
	25	G 1 A	18.0	40	48.0	18	41	46	485	**EVGE25SRED**	400	400	
	30	G 1 1/4 A	23.5	50	51.0	20	50	50	661	**EVGE30SRED**	400	400	
	38	G 1 1/2 A	29.0	55	60.0	22	55	60	962	**EVGE38SRED**	315	315	

[1]) Pressure shown = item deliverable
[3]) L = light series; [4]) S = heavy series

$\frac{\text{PN (bar)}}{10}$ = PN (MPa)

The use of the swivel nut fitting EGE is to be prefered (see page I61).

Information on ordering alternative sealing materials see page I7.

*Please add the **suffixes** below according to the material/surface required.

Order code suffixes			
Material	Suffix surface and material	Example	Standard sealing material (no additonal. suffix needed)
Steel, zinc plated, Cr(VI)-free	CF	EVGE16SREDCF	NBR
Stainless Steel	71	EVGE16SRED71	VIT
Brass	MS	EVGE16SREDMS	NBR

EGE-NPT Swivel connector

Male NPT thread (SAE J476) / EO 24° DKO swivel

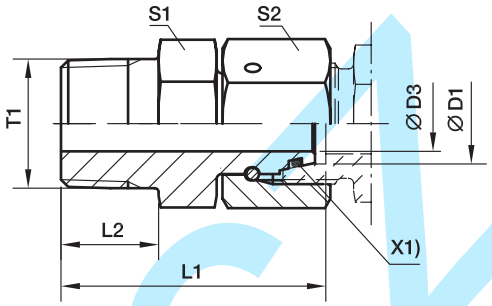

X1) O-ring OR

Series	D1	T1	D3	L1	L2	S1	S2	Weight g/1 piece	Order code*	PN (bar)[1] CF
L[3]	06	1/8-27 NPT	2.5	31.5	10.0	11	14	23	**EGE06L1/8NPT**	315
	08	1/4-18 NPT	4.0	37.5	14.5	14	17	41	**EGE08L1/4NPT**	315
	10	1/4-18 NPT	6.0	38.0	14.5	14	19	44	**EGE10L1/4NPT**	315
	12	3/8-18 NPT	8.0	40.0	14.5	19	22	69	**EGE12L3/8NPT**	315
	15	1/2-14 NPT	10.0	49.5	19.5	22	27	127	**EGE15L1/2NPT**	315
	18	1/2-14 NPT	12.0	49.0	19.5	24	32	142	**EGE18L1/2NPT**	315
	22	3/4-14 NPT	16.0	52.0	19.5	27	36	200	**EGE22L3/4NPT**	160
	28	1-11.5 NPT	22.0	61.0	24.5	36	41	306	**EGE28L1NPT**	160
	35	1 1/4-11.5 NPT	28.0	65.5	25.0	46	50	486	**EGE35L11/4NPT**	160
	42	1 1/2-11.5 NPT	34.0	68.5	26.0	50	60	662	**EGE42L11/2NPT**	160
S[4]	06	1/4-18 NPT	2.5	37.5	14.5	14	17	42	**EGE06S1/4NPT**	630
	08	1/4-18 NPT	4.0	38.0	14.5	14	19	47	**EGE08S1/4NPT**	630
	10	3/8-18 NPT	6.0	40.5	14.5	19	22	75	**EGE10S3/8NPT**	630
	12	3/8-18 NPT	8.0	42.0	14.5	19	24	81	**EGE12S3/8NPT**	630
	16	1/2-14 NPT	11.0	51.0	19.5	22	30	145	**EGE16S1/2NPT**	400
	20	3/4-14 NPT	14.0	54.0	19.5	27	36	221	**EGE20S3/4NPT**	400
	25	1-11.5 NPT	18.0	63.5	24.5	36	46	422	**EGE25S1NPT**	400
	30	1 1/4-11.5 NPT	23.0	70.5	25.0	46	50	628	**EGE30S11/4NPT**	400
	38	1 1/2-11.5 NPT	30.0	73.5	26.0	50	60	770	**EGE38S11/2NPT**	315

[1]) Pressure shown = item deliverable

[3]) L = light series; [4]) S = heavy series

$\frac{PN\ (bar)}{10} = PN\ (MPa)$

Information on ordering alternative sealing materials see page I7.

*Please add the **suffixes** below according to the material/surface required.

Order code suffixes			
Material	Suffix surface and material	Example	Standard sealing material (no additonal. suffix needed)
Steel, zinc plated, Cr(VI)-free	CF	EGE16S1/2NPTCF	NBR

KOVOZ

EW-M-ED Assembled adjustable swivel elbow

EO 24° cone end / Male metric thread – ED-seal (ISO 9974)

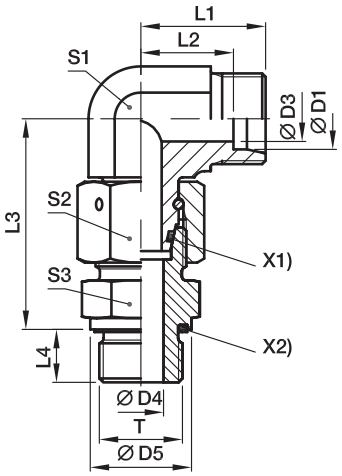

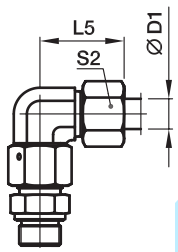

X1) O-ring OR
X2) Eolastic-sealing ED

Series	D1	T	D3	D4	D5	L1	L2	L3	L4	L5	S1	S2	S3	Weight g/1 piece	Order code*	PN (bar)[1] CF	PN (bar)[1] 71
L[3]	06	M 10×1.0	4	4	14	19	12.0	34.5	8	27	12	14	14	47	**EW06LMEDOMD**	500	315
	08	M 12×1.5	6	6	17	21	14.0	37.5	12	29	12	17	17	69	**EW08LMEDOMD**	500	315
	10	M 14×1.5	8	7	19	22	15.0	40.0	12	30	14	19	19	87	**EW10LMEDOMD**	500	315
	12	M 16×1.5	10	9	22	24	17.0	42.0	12	32	17	22	22	111	**EW12LMEDOMD**	400	315
	15	M 18×1.5	12	11	24	28	21.0	46.0	12	36	19	27	24	179	**EW15LMEDOMD**	400	315
	18	M 22×1.5	15	14	27	31	23.5	50.0	14	40	24	32	27	272	**EW18LMEDOMD**	400	315
	22	M 26×1.5	19	18	32	35	27.5	55.0	16	44	27	36	32	360	**EW22LMEDOMD**	250	160
	28	M 33×2.0	24	23	40	38	30.5	59.0	18	47	36	41	41	538	**EW28LMEDOMD**	250	160
	35	M 42×2.0	30	30	50	45	34.5	68.5	20	56	41	50	50	843	**EW35LMEDOMD**	250	160
	42	M 48×2.0	36	36	55	51	40.0	75.0	22	63	50	60	55	1353	**EW42LMEDOMD**	250	160
S[4]	06	M 12×1.5	4	4	17	23	16.0	40.0	12	31	12	17	17	77	**EW06SMEDOMD**	800	630
	08	M 14×1.5	5	5	19	24	17.0	42.5	12	32	14	19	19	107	**EW08SMEDOMD**	800	630
	10	M 16×1.5	6	7	22	25	17.5	45.0	12	34	17	22	22	146	**EW10SMEDOMD**	800	630
	12	M 18×1.5	8	8	24	29	21.5	48.0	12	38	17	24	24	178	**EW12SMEDOMD**	630	630
	16	M 22×1.5	12	12	27	33	24.5	55.0	14	43	24	30	27	307	**EW16SMEDOMD**	630	400
	20	M 27×2.0	16	16	32	37	26.5	65.0	16	48	27	36	32	459	**EW20SMEDOMD**	420	400
	25	M 33×2.0	20	20	40	42	30.0	73.0	18	54	36	46	41	812	**EW25SMEDOMD**	420	400
	30	M 42×2.0	25	25	50	49	35.5	78.5	20	62	41	50	50	1167	**EW30SMEDOMD**	420	400
	38	M 48×2.0	32	32	55	57	41.0	89.0	22	72	50	60	55	1790	**EW38SMEDOMD**	420	315

[1]) Pressure shown = item deliverable
[3]) L = light series; [4]) S = heavy series

$\frac{\text{PN (bar)}}{10}$ = PN (MPa)

Delivery without nut and ring. Information on ordering complete fittings or alternative sealing materials see page I7.

*Please add the **suffixes** below according to the material/surface required.

Order code suffixes			
Material	Suffix surface and material	Example	Standard sealing material (no additonal. suffix needed)
Steel, zinc plated, Cr(VI)-free	CF	EW16SMEDOMDCF	NBR
Stainless Steel	71	EW16SMEDOMD71	VIT

EW-R-ED Assembled adjustable swivel elbow

EO 24° cone end / Male BSPP thread – ED-seal (ISO 1179)

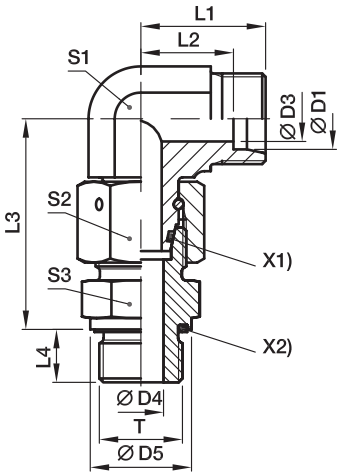

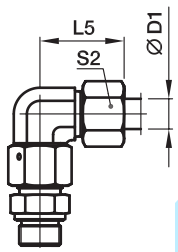

X1) O-ring OR
X2) Eolastic-sealing ED

Series	D1	T	D3	D4	D5	L1	L2	L3	L4	L5	S1	S2	S3	Weight g/1 piece	Order code*	PN (bar)[1] CF	PN (bar)[1] 71
L[3]	06	G 1/8 A	4	4	14	19	12.0	34.5	8	27	12	14	14	47	**EW06LREDOMD**	500	315
	08	G 1/4 A	6	6	19	21	14.0	37.5	12	29	12	17	19	69	**EW08LREDOMD**	500	315
	10	G 1/4 A	8	6	19	22	15.0	40.0	12	30	14	19	19	87	**EW10LREDOMD**	500	315
	12	G 3/8 A	10	9	22	24	17.0	42.0	12	32	17	22	22	122	**EW12LREDOMD**	400	315
	15	G 1/2 A	12	11	27	28	21.0	46.5	14	36	19	27	27	199	**EW15LREDOMD**	400	315
	18	G 1/2 A	15	14	27	31	23.5	50.0	14	40	24	32	27	268	**EW18LREDOMD**	400	315
	22	G 3/4 A	19	18	32	35	27.5	55.0	16	44	27	36	32	360	**EW22LREDOMD**	250	160
	28	G 1 A	24	23	40	38	30.5	59.0	18	47	36	41	41	539	**EW28LREDOMD**	250	160
	35	G 1 1/4 A	30	30	50	45	34.5	68.5	20	56	41	50	50	834	**EW35LREDOMD**	250	160
	42	G 1 1/2 A	36	36	55	51	40.0	75.0	22	63	50	60	55	1341	**EW42LREDOMD**	250	160
S[4]	06	G 1/4 A	4	4	19	23	16.0	40.0	12	31	12	17	19	83	**EW06SREDOMD**	800	630
	08	G 1/4 A	5	5	19	24	17.0	42.5	12	32	14	19	19	106	**EW08SREDOMD**	800	630
	10	G 3/8 A	6	7	22	25	17.5	45.0	12	34	17	22	22	148	**EW10SREDOMD**	800	630
	12	G 3/8 A	8	8	22	29	21.5	48.0	12	38	17	24	22	170	**EW12SREDOMD**	630	630
	16	G 1/2 A	12	12	27	33	24.5	55.0	14	43	24	30	27	303	**EW16SREDOMD**	630	400
	20	G 3/4 A	16	16	32	37	26.5	65.0	16	48	27	36	32	458	**EW20SREDOMD**	420	400
	25	G 1 A	20	20	40	42	30.0	73.0	18	54	36	46	41	813	**EW25SREDOMD**	420	400
	30	G 1 1/4 A	25	25	50	49	35.5	78.5	20	62	41	50	50	1163	**EW30SREDOMD**	420	400
	38	G 1 1/2 A	32	32	55	57	41.0	89.0	22	72	50	60	55	1784	**EW38SREDOMD**	420	315

[1]) Pressure shown = item deliverable
[3]) L = light series; [4]) S = heavy series

$\frac{\text{PN (bar)}}{10}$ = PN (MPa)

Delivery without nut and ring. Information on ordering complete fittings or alternative sealing materials see page I7.

*Please add the **suffixes** below according to the material/surface required.

Order code suffixes			
Material	Suffix surface and material	Example	Standard sealing material (no additonal. suffix needed)
Steel, zinc plated, Cr(VI)-free	CF	EW16SREDOMDCF	NBR
Stainless Steel	71	EW16SREDOMD71	VIT

EV-M-ED Assembled adjustable swivel 45° elbow

EO 24° cone end / Male metric thread – ED-seal (ISO 9974)

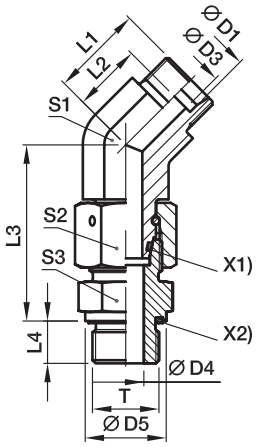

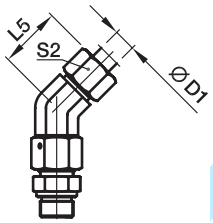

X1) O-ring OR
X2) Eolastic-sealing ED

Series	D1	T	D3	D4	D5	L1	L2	L3	L4	L5	S1	S2	S3	Weight g/1 piece	Order code*	PN (bar)[1] CF	PN (bar)[1] 71
L[3]	06	M 10×1.0	4	4	14	16.0	9.0	34.5	8	24	14	14	14	44	**EV06LMEDOMD**	315	315
	08	M 12×1.5	6	6	17	19.0	12.0	37.5	12	27	14	17	17	62	**EV08LMEDOMD**	315	315
	10	M 14×1.5	8	7	19	19.0	12.0	40.0	12	27	19	19	19	80	**EV10LMEDOMD**	315	315
	12	M 16×1.5	10	9	22	21.0	14.0	42.0	12	29	19	22	22	110	**EV12LMEDOMD**	315	315
	15	M 18×1.5	12	11	24	24.0	17.0	46.0	12	32	22	27	24	171	**EV15LMEDOMD**	315	315
	18	M 22×1.5	15	14	27	24.0	16.5	50.0	14	33	27	32	27	245	**EV18LMEDOMD**	315	315
	22	M 26×1.5	19	18	32	26.0	18.5	55.0	16	35	30	36	32	339	**EV22LMEDOMD**	160	160
	28	M 33×2.0	24	23	40	30.5	23.0	59.0	18	40	36	41	41	517	**EV28LMEDOMD**	160	160
	35	M 42×2.0	30	30	50	37.0	26.5	68.5	20	48	50	50	50	810	**EV35LMEDOMD**	160	160
	42	M 48×2.0	36	36	55	37.0	26.0	75.0	22	49	50	60	55	1193	**EV42LMEDOMD**	160	160
S[4]	06	M 12×1.5	4	4	17	16.0	9.0	40.0	12	24	14	17	17	72	**EV06SMEDOMD**	630	630
	08	M 14×1.5	5	5	19	19.0	12.0	42.5	12	27	19	19	19	102	**EV08SMEDOMD**	630	630
	10	M 16×1.5	7	7	22	21.0	13.5	45.0	12	30	19	22	22	132	**EV10SMEDOMD**	630	630
	12	M 18×1.5	8	8	24	24.0	16.5	48.0	12	33	22	24	24	173	**EV12SMEDOMD**	630	630
	16	M 22×1.5	12	12	27	24.0	15.5	55.0	14	34	27	30	27	284	**EV16SMEDOMD**	400	400
	20	M 27×2.0	16	16	32	26.5	16.0	65.0	16	38	30	36	32	435	**EV20SMEDOMD**	400	400
	25	M 33×2.0	20	20	40	30.5	18.5	73.0	18	43	36	46	41	790	**EV25SMEDOMD**	400	400
	30	M 42×2.0	25	25	50	37.0	23.5	78.5	20	50	50	50	50	1132	**EV30SMEDOMD**	400	400
	38	M 48×2.0	32	32	55	37.0	21.0	89.0	22	52	50	60	55	1631	**EV38SMEDOMD**	315	315

[1]) Pressure shown = item deliverable
[3]) L = light series; [4]) S = heavy series

$\frac{\text{PN (bar)}}{10}$ = PN (MPa)

Delivery without nut and ring. Information on ordering complete fittings or alternative sealing materials see page I7.

*Please add the **suffixes** below according to the material/surface required.

Order code suffixes			
Material	Suffix surface and material	Example	Standard sealing material (no additonal. suffix needed)
Steel, zinc plated, Cr(VI)-free	CF	EV16SMEDOMDCF	NBR
Stainless Steel	71	EV16SMEDOMD71	VIT

EV-R-ED Assembled adjustable swivel 45° elbow

EO 24° cone end / Male BSPP thread – ED-seal (ISO 1179)

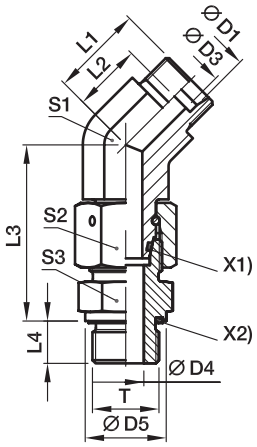

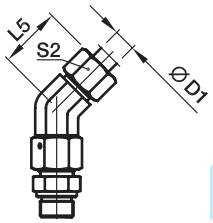

X1) O-ring OR
X2) Eolastic-sealing ED

Series	D1	T	D3	D4	D5	L1	L2	L3	L4	L5	S1	S2	S3	Weight g/1 piece	Order code*	PN (bar)[1] CF	PN (bar)[1] 71
L[3]	06	G 1/8 A	4	4	14	16.0	9.0	34.5	8	24	14	14	14	44	**EV06LREDOMD**	315	315
	08	G 1/4 A	6	6	19	19.0	12.0	37.5	12	27	14	17	19	67	**EV08LREDOMD**	315	315
	10	G 1/4 A	8	6	19	19.0	12.0	40.0	12	27	19	19	19	78	**EV10LREDOMD**	315	315
	12	G 3/8 A	10	9	22	21.0	14.0	42.0	12	29	19	22	22	112	**EV12LREDOMD**	315	315
	15	G 1/2 A	12	11	27	24.0	17.0	46.5	14	32	22	27	27	192	**EV15LREDOMD**	315	315
	18	G 1/2 A	15	14	27	24.0	16.5	50.0	14	33	27	32	27	242	**EV18LREDOMD**	315	315
	22	G 3/4 A	19	18	32	26.0	18.5	55.0	16	35	30	36	32	338	**EV22LREDOMD**	160	160
	28	G 1 A	24	23	40	30.5	23.0	59.0	18	40	36	41	41	518	**EV28LREDOMD**	160	160
	35	G 1 1/4 A	30	30	50	37.0	26.5	68.5	20	48	50	50	50	801	**EV35LREDOMD**	160	160
	42	G 1 1/2 A	36	36	55	37.0	26.0	75.0	22	49	50	60	55	1181	**EV42LREDOMD**	160	160
S[4]	06	G 1/4 A	4	4	19	16.0	9.0	40.0	12	24	14	17	19	78	**EV06SREDOMD**	630	630
	08	G 1/4 A	5	5	19	19.0	12.0	42.5	12	27	19	19	19	101	**EV08SREDOMD**	630	630
	10	G 3/8 A	7	7	22	21.0	13.5	45.0	12	30	19	22	22	134	**EV10SREDOMD**	630	630
	12	G 3/8 A	8	8	22	24.0	16.5	48.0	12	33	22	24	22	165	**EV12SREDOMD**	630	630
	16	G 1/2 A	12	12	27	24.0	15.5	55.0	14	34	27	30	27	280	**EV16SREDOMD**	400	400
	20	G 3/4 A	16	16	32	26.5	16.0	65.0	16	38	30	36	32	434	**EV20SREDOMD**	400	400
	25	G 1 A	20	20	40	30.5	18.5	73.0	18	43	36	46	41	792	**EV25SREDOMD**	400	400
	30	G 1 1/4 A	25	25	50	37.0	23.5	78.5	20	50	50	50	50	1128	**EV30SREDOMD**	400	400
	38	G 1 1/2 A	32	32	55	37.0	21.0	89.0	22	52	50	60	55	1625	**EV38SREDOMD**	315	315

[1]) Pressure shown = item deliverable

[3]) L = light series; [4]) S = heavy series

$\frac{\text{PN (bar)}}{10}$ = PN (MPa)

Delivery without nut and ring. Information on ordering complete fittings or alternative sealing materials see page I7.

*Please add the **suffixes** below according to the material/surface required.

Order code suffixes			
Material	Suffix surface and material	Example	Standard sealing material (no additonal. suffix needed)
Steel, zinc plated, Cr(VI)-free	CF	EV16SREDOMDCF	NBR
Stainless Steel	71	EV16SREDOMD71	VIT

ET-M-ED Assembled adjustable swivel branch tee

EO 24° cone end / Male metric thread – ED-seal (ISO 9974)

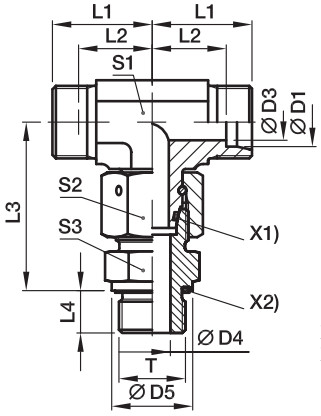

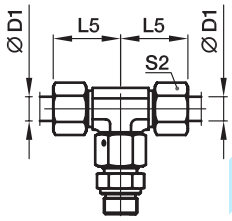

X1) O-ring OR
X2) Eolastic-sealing ED

Series	D1	T	D3	D4	D5	L1	L2	L3	L4	L5	S1	S2	S3	Weight g/1 piece	Order code*	PN (bar)[1] CF	PN (bar)[1] 71
L[3]	06	M 10×1.0	4	4	14	19	12.0	34.5	8	27	12	14	14	55	**ET06LMEDOMD**	500	315
	08	M 12×1.5	6	6	17	21	14.0	37.5	12	29	12	17	17	75	**ET08LMEDOMD**	500	315
	10	M 14×1.5	8	7	19	22	15.0	40.0	12	30	14	19	19	98	**ET10LMEDOMD**	500	315
	12	M 16×1.5	10	9	22	24	17.0	42.0	12	32	17	22	22	135	**ET12LMEDOMD**	400	315
	15	M 18×1.5	12	11	24	28	21.0	46.0	12	36	19	27	24	203	**ET15LMEDOMD**	400	315
	18	M 22×1.5	15	14	27	31	23.5	50.0	14	40	24	32	27	310	**ET18LMEDOMD**	400	315
	22	M 26×1.5	19	18	32	35	27.5	55.0	16	44	27	36	32	377	**ET22LMEDOMD**	250	160
	28	M 33×2.0	24	23	40	38	30.5	59.0	18	47	36	41	41	607	**ET28LMEDOMD**	250	160
	35	M 42×2.0	30	30	50	45	34.5	68.5	20	56	41	50	50	929	**ET35LMEDOMD**	250	160
	42	M 48×2.0	36	36	55	51	40.0	75.0	22	63	50	60	55	1478	**ET42LMEDOMD**	250	160
S[4]	06	M 12×1.5	4	4	17	23	16.0	40.0	12	31	12	17	17	92	**ET06SMEDOMD**	800	630
	08	M 14×1.5	5	5	19	24	17.0	42.5	12	32	14	19	19	126	**ET08SMEDOMD**	800	630
	10	M 16×1.5	6	7	22	25	17.5	45.0	12	34	17	22	22	167	**ET10SMEDOMD**	800	630
	12	M 18×1.5	8	8	24	29	21.5	48.0	12	38	17	24	24	207	**ET12SMEDOMD**	630	630
	16	M 22×1.5	12	12	27	33	24.5	55.0	14	43	24	30	27	352	**ET16SMEDOMD**	630	400
	20	M 27×2.0	16	16	32	37	26.5	65.0	16	48	27	36	32	498	**ET20SMEDOMD**	420	400
	25	M 33×2.0	20	20	40	42	30.0	73.0	18	54	36	46	41	916	**ET25SMEDOMD**	420	400
	30	M 42×2.0	25	25	50	49	35.5	78.5	20	62	41	50	50	1328	**ET30SMEDOMD**	420	400
	38	M 48×2.0	32	32	55	57	41.0	89.0	22	72	50	60	55	2031	**ET38SMEDOMD**	420	315

[1]) Pressure shown = item deliverable
[3]) L = light series; [4]) S = heavy series

$\frac{\text{PN (bar)}}{10}$ = PN (MPa)

Delivery without nut and ring. Information on ordering complete fittings or alternative sealing materials see page I7.

*Please add the **suffixes** below according to the material/surface required.

Order code suffixes			
Material	Suffix surface and material	Example	Standard sealing material (no additonal. suffix needed)
Steel, zinc plated, Cr(VI)-free	CF	ET16SMEDOMDCF	NBR
Stainless Steel	71	ET16SMEDOMD71	VIT

ET-R-ED Assembled adjustable swivel branch tee

EO 24° cone end / Male BSPP thread – ED-seal (ISO 1179)

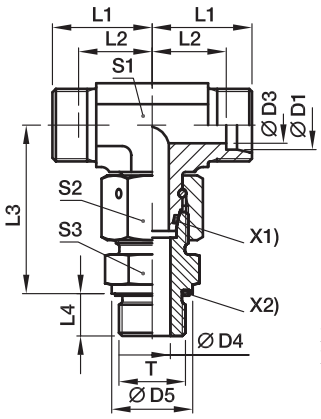

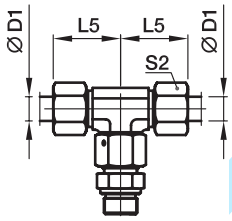

X1) O-ring OR
X2) Eolastic-sealing ED

Series	D1	T	D3	D4	D5	L1	L2	L3	L4	L5	S1	S2	S3	Weight g/1 piece	Order code*	PN (bar)[1] CF	PN (bar)[1] 71
L[3]	06	G 1/8 A	4	4	14	19	12.0	34.5	8	27	12	14	14	55	**ET06LREDOMD**	500	315
	08	G 1/4 A	6	6	19	21	14.0	37.5	12	29	12	17	19	80	**ET08LREDOMD**	500	315
	10	G 1/4 A	8	6	19	22	15.0	40.0	12	30	14	19	19	98	**ET10LREDOMD**	500	315
	12	G 3/8 A	10	9	22	24	17.0	42.0	12	32	17	22	22	136	**ET12LREDOMD**	400	315
	15	G 1/2 A	12	11	27	28	21.0	46.5	14	36	19	27	27	224	**ET15LREDOMD**	400	315
	18	G 1/2 A	15	14	27	31	23.5	50.0	14	40	24	32	27	306	**ET18LREDOMD**	400	315
	22	G 3/4 A	19	18	32	35	27.5	55.0	16	44	27	36	32	423	**ET22LREDOMD**	250	160
	28	G 1 A	24	23	40	38	30.5	59.0	18	47	36	41	41	608	**ET28LREDOMD**	250	160
	35	G 1 1/4 A	30	30	50	45	34.5	68.5	20	56	41	50	50	920	**ET35LREDOMD**	250	160
	42	G 1 1/2 A	36	36	55	51	40.0	75.0	22	63	50	60	55	1466	**ET42LREDOMD**	250	160
S[4]	06	G 1/4 A	4	4	19	23	16.0	40.0	12	31	12	17	19	98	**ET06SREDOMD**	800	630
	08	G 1/4 A	5	5	19	24	17.0	42.5	12	32	14	19	19	125	**ET08SREDOMD**	800	630
	10	G 3/8 A	6	7	22	25	17.5	45.0	12	34	17	22	22	169	**ET10SREDOMD**	800	630
	12	G 3/8 A	8	8	22	29	21.5	48.0	12	38	17	24	22	198	**ET12SREDOMD**	630	630
	16	G 1/2 A	12	12	27	33	24.5	55.0	14	43	24	30	27	348	**ET16SREDOMD**	630	400
	20	G 3/4 A	16	16	32	37	26.5	65.0	16	48	27	36	32	498	**ET20SREDOMD**	420	400
	25	G 1 A	20	20	40	42	30.0	73.0	18	54	36	46	41	918	**ET25SREDOMD**	420	400
	30	G 1 1/4 A	25	25	50	49	35.5	78.5	20	62	41	50	50	1324	**ET30SREDOMD**	420	400
	38	G 1 1/2 A	32	32	55	57	41.0	89.0	22	72	50	60	55	2025	**ET38SREDOMD**	420	315

[1]) Pressure shown = item deliverable

[3]) L = light series; [4]) S = heavy series

$\frac{\text{PN (bar)}}{10}$ = PN (MPa)

Delivery without nut and ring. Information on ordering complete fittings or alternative sealing materials see page I7.

*Please add the **suffixes** below according to the material/surface required

Order code suffixes			
Material	Suffix surface and material	Example	Standard sealing material (no additonal. suffix needed)
Steel, zinc plated, Cr(VI)-free	CF	ET16SREDOMDCF	NBR
Stainless Steel	71	ET16SREDOMD71	VIT

EL-M-ED Assembled adjustable swivel run tee

EO 24° cone end / Male metric thread – ED-seal (ISO 9974)

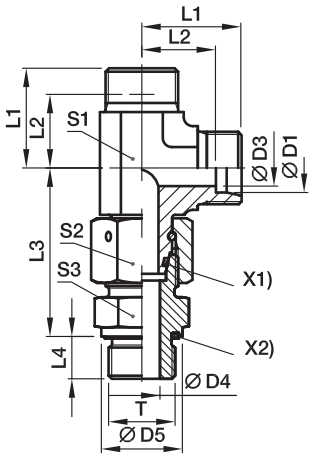

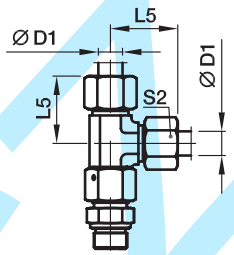

X1) O-ring OR
X2) Eolastic-sealing ED

Series	D1	T	D3	D4	D5	L1	L2	L3	L4	L5	S1	S2	S3	Weight g/1 piece	Order code*	PN (bar)[1] CF	PN (bar)[1] 71
L[3]	06	M 10×1.0	4	4	14	19	12.0	34.5	8	27	12	14	14	55	**EL06LMEDOMD**	500	315
	08	M 12×1.5	6	6	17	21	14.0	37.5	12	29	12	17	17	75	**EL08LMEDOMD**	500	315
	10	M 14×1.5	8	7	19	22	15.0	40.0	12	30	14	19	19	97	**EL10LMEDOMD**	500	315
	12	M 16×1.5	10	9	22	24	17.0	42.0	12	32	17	22	22	135	**EL12LMEDOMD**	400	315
	15	M 18×1.5	12	11	24	28	21.0	46.0	12	36	19	27	24	201	**EL15LMEDOMD**	400	315
	18	M 22×1.5	15	14	27	31	23.5	50.0	14	40	24	32	27	308	**EL18LMEDOMD**	400	315
	22	M 26×1.5	19	18	32	35	27.5	55.0	16	44	27	36	32	404	**EL22LMEDOMD**	250	160
	28	M 33×2.0	24	23	40	38	30.5	59.0	18	47	36	41	41	605	**EL28LMEDOMD**	250	160
	35	M 42×2.0	30	30	50	45	34.5	68.5	20	56	41	50	50	947	**EL35LMEDOMD**	250	160
	42	M 48×2.0	36	36	55	51	40.0	75.0	22	63	50	60	55	1497	**EL42LMEDOMD**	250	160
S[4]	06	M 12×1.5	4	4	17	23	16.0	40.0	12	31	12	17	17	91	**EL06SMEDOMD**	800	630
	08	M 14×1.5	5	5	19	24	17.0	42.5	12	32	14	19	19	126	**EL08SMEDOMD**	800	630
	10	M 16×1.5	6	7	22	25	17.5	45.0	12	34	17	22	22	169	**EL10SMEDOMD**	800	630
	12	M 18×1.5	8	8	24	29	21.5	48.0	12	38	17	24	24	206	**EL12SMEDOMD**	630	630
	16	M 22×1.5	12	12	27	33	24.5	55.0	14	43	24	30	27	354	**EL16SMEDOMD**	630	400
	20	M 27×2.0	16	16	32	37	26.5	65.0	16	48	27	36	32	526	**EL20SMEDOMD**	420	400
	25	M 33×2.0	20	20	40	42	30.0	73.0	18	54	36	46	41	919	**EL25SMEDOMD**	420	400
	30	M 42×2.0	25	25	50	49	35.5	78.5	20	62	41	50	50	1328	**EL30SMEDOMD**	420	400
	38	M 48×2.0	32	32	55	57	41.0	89.0	22	72	50	60	55	2039	**EL38SMEDOMD**	420	315

[1]) Pressure shown = item deliverable
[3]) L = light series; [4]) S = heavy series

$\frac{\text{PN (bar)}}{10}$ = PN (MPa)

Delivery without nut and ring. Information on ordering complete fittings or alternative sealing materials see page I7.

*Please add the **suffixes** below according to the material/surface required.

Order code suffixes			
Material	Suffix surface and material	Example	Standard sealing material (no additonal. suffix needed)
Steel, zinc plated, Cr(VI)-free	CF	EL16SMEDOMDCF	NBR
Stainless Steel	71	EL16SMEDOMD71	VIT

EL-R-ED Assembled adjustable swivel run tee

EO 24° cone end / Male BSPP thread – ED-seal (ISO 1179)

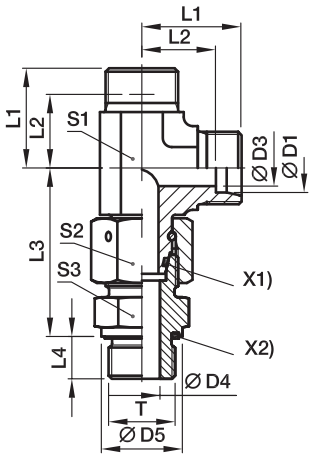

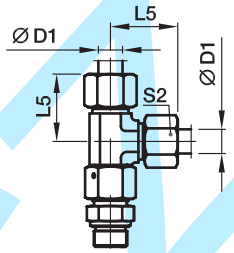

X1) O-ring OR
X2) Eolastic-sealing ED

Series	D1	T	D3	D4	D5	L1	L2	L3	L4	L5	S1	S2	S3	Weight g/1 piece	Order code*	PN (bar)[1] CF	PN (bar)[1] 71
L[3]	06	G 1/8 A	4	4	14	19	12.0	34.5	8	27	12	14	14	55	**EL06LREDOMD**	500	315
	08	G 1/4 A	6	6	19	21	14.0	37.5	12	29	12	17	19	80	**EL08LREDOMD**	500	315
	10	G 1/4 A	8	6	19	22	15.0	40.0	12	30	14	19	19	97	**EL10LREDOMD**	500	315
	12	G 3/8 A	10	9	22	24	17.0	42.0	12	32	17	22	22	137	**EL12LREDOMD**	400	315
	15	G 1/2 A	12	11	27	28	21.0	46.5	14	36	19	27	27	222	**EL15LREDOMD**	400	315
	18	G 1/2 A	15	14	27	31	23.5	50.0	14	40	24	32	27	304	**EL18LREDOMD**	400	315
	22	G 3/4 A	19	18	32	35	27.5	55.0	16	44	27	36	32	404	**EL22LREDOMD**	250	160
	28	G 1 A	24	23	40	38	30.5	59.0	18	47	36	41	41	606	**EL28LREDOMD**	250	160
	35	G 1 1/4 A	30	30	50	45	34.5	68.5	20	56	41	50	50	938	**EL35LREDOMD**	250	160
	42	G 1 1/2 A	36	36	55	51	40.0	75.0	22	63	50	60	55	1485	**EL42LREDOMD**	250	160
S[4]	06	G 1/4 A	4	4	19	23	16.0	40.0	12	31	12	17	19	97	**EL06SREDOMD**	800	630
	08	G 1/4 A	5	5	19	24	17.0	42.5	12	32	14	19	19	125	**EL08SREDOMD**	800	630
	10	G 3/8 A	6	7	22	25	17.5	45.0	12	34	17	22	22	171	**EL10SREDOMD**	800	630
	12	G 3/8 A	8	8	22	29	21.5	48.0	12	38	17	24	22	198	**EL12SREDOMD**	630	630
	16	G 1/2 A	12	12	27	33	24.5	55.0	14	43	24	30	27	350	**EL16SREDOMD**	630	400
	20	G 3/4 A	16	16	32	37	26.5	65.0	16	48	27	36	32	524	**EL20SREDOMD**	420	400
	25	G 1 A	20	20	40	42	30.0	73.0	18	54	36	46	41	921	**EL25SREDOMD**	420	400
	30	G 1 1/4 A	25	25	50	49	35.5	78.5	20	62	41	50	50	1324	**EL30SREDOMD**	420	400
	38	G 1 1/2 A	32	32	55	57	41.0	89.0	22	72	50	60	55	2033	**EL38SREDOMD**	420	315

[1]) Pressure shown = item deliverable

[3]) L = light series; [4]) S = heavy series

$\frac{\text{PN (bar)}}{10}$ = PN (MPa)

Delivery without nut and ring. Information on ordering complete fittings or alternative sealing materials see page I7.

*Please add the **suffixes** below according to the material/surface required.

Order code suffixes			
Material	Suffix surface and material	Example	Standard sealing material (no additonal. suffix needed)
Steel, zinc plated, Cr(VI)-free	CF	EL16SREDOMDCF	NBR
Stainless Steel	71	EL16SREDOMD71	VIT

EVW-M Assembled adjustable standpipe elbow

EO 24° cone end / Male metric thread – metal sealing edge (ISO 9974)

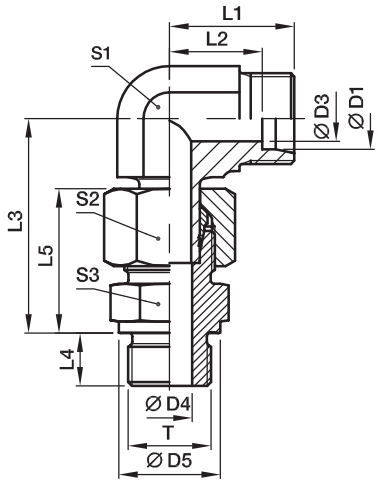

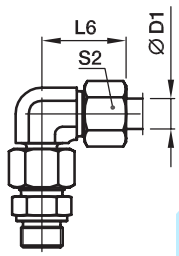

Pre-assembled, complete with straight male stud connector (with cutting face DIN 3852, type B). Final assembly (in appropriate body) at least 1/4 turn beyond the point of clearly perceptible resistance.

Series	D1	T	D3	D4	D5	L1	L2	L3	L4	L5	L6	S1	S2	S3	Weight g/1 piece	Order code*	PN (bar)[1] CF	PN (bar)[1] 71
L[3]	06	M 10×1.0	4	4	14	19	12.0	34.5	8	23	27	12	14	14	41	**EVW06LMOMD**	315	315
	08	M 12×1.5	6	6	17	21	14.0	37.5	12	25	29	12	17	17	63	**EVW08LMOMD**	315	315
	10	M 14×1.5	8	7	19	22	15.0	40.0	12	26	30	14	19	19	83	**EVW10LMOMD**	315	315
	12	M 16×1.5	10	9	21	24	17.0	42.0	12	27	32	17	22	22	107	**EVW12LMOMD**	315	315
	15	M 18×1.5	12	11	23	28	21.0	46.0	12	29	36	19	27	24	170	**EVW15LMOMD**	250	250
	18	M 22×1.5	15	14	27	31	23.5	50.0	14	31	40	24	32	27	265	**EVW18LMOMD**	250	250
	22	M 26×1.5	19	18	31	35	27.5	55.0	16	33	44	27	36	32	355	**EVW22LMOMD**	160	160
	28	M 33×2.0	24	23	39	38	30.5	59.5	18	34	47	36	41	41	514	**EVW28LMOMD**	160	160
	35	M 42×2.0	30	30	49	45	34.5	68.5	20	39	56	41	50	50	791	**EVW35LMOMD**	160	160
	42	M 48×2.0	36	36	55	51	40.0	79.0	22	42	63	50	60	55	1153	**EVW42LMOMD**	160	160
S[4]	06	M 12×1.5	4	4	17	23	16.0	40.0	12	28	31	12	17	17	73	**EVW06SMOMD**	400	400
	08	M 14×1.5	5	5	19	24	17.0	42.5	12	30	32	14	19	19	100	**EVW08SMOMD**	400	400
	10	M 16×1.5	7	7	21	25	17.5	46.0	12	31	34	17	22	22	133	**EVW10SMOMD**	400	400
	12	M 18×1.5	8	8	23	29	21.5	48.0	12	33	38	17	24	24	174	**EVW12SMOMD**	400	400
	16	M 22×1.5	12	12	27	33	24.5	56.0	14	37	43	24	30	27	309	**EVW16SMOMD**	400	400
	20	M 27×2.0	16	16	32	37	26.5	65.0	16	42	48	27	36	32	429	**EVW20SMOMD**	400	400
	25	M 33×2.0	20	20	39	42	30.0	73.0	18	47	54	36	46	41	826	**EVW25SMOMD**	250	250
	30	M 42×2.0	25	25	49	49	35.5	78.5	20	50	62	41	50	50	1132	**EVW30SMOMD**	160	160
	38	M 48×2.0	32	32	55	57	41.0	92.5	22	57	72	50	60	55	1874	**EVW38SMOMD**	160	160

[1]) Pressure shown = item deliverable

[3]) L = light series; [4]) S = heavy series

$\frac{\text{PN (bar)}}{10}$ = PN (MPa)

Delivery without nut and ring. Information on ordering complete fittings see page I7.

*Please add the **suffixes** below according to the material/surface required.

Order code suffixes		
Material	Suffix surface and material	Example
Steel, zinc plated, Cr(VI)-free	CF	EVW16SMOMDCF
Stainless Steel	71	EVW16SMOMD71

EVW-R Assembled adjustable standpipe elbow

EO 24° cone end / Male BSPP thread – metal sealing edge (ISO 1179)

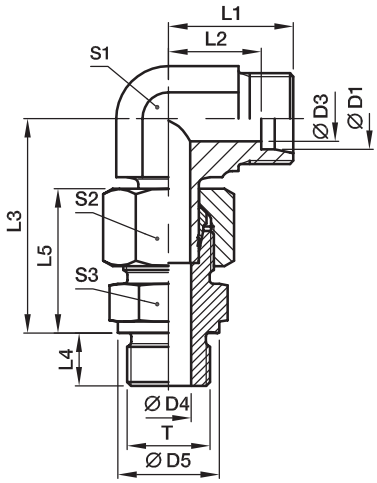

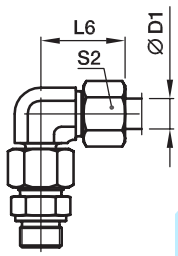

Pre-assembled, complete with straight male stud connector (with cutting face DIN 3852, type B). Final assembly (in appropriate body) at least 1/4 turn beyond the point of clearly perceptible resistance.

Series	D1	T	D3	D4	D5	L1	L2	L3	L4	L5	L6	S1	S2	S3	Weight g/1 piece	Order code*	PN (bar)[1] CF	PN (bar)[1] 71
L[3]	06	G 1/8 A	4	4	14	19	12.0	34.5	8	23	27	12	14	14	47	**EVW06LROMD**	315	315
	08	G 1/4 A	6	6	18	21	14.0	37.5	12	25	29	12	17	19	68	**EVW08LROMD**	315	315
	10	G 1/4 A	8	6	18	22	15.0	40.0	12	26	30	14	19	19	84	**EVW10LROMD**	315	315
	12	G 3/8 A	10	9	22	24	17.0	42.0	12	27	32	17	22	22	118	**EVW12LROMD**	315	315
	15	G 1/2 A	12	11	26	28	21.0	46.5	14	29	36	19	27	27	191	**EVW15LROMD**	250	250
	18	G 1/2 A	15	14	26	31	23.5	50.0	14	31	40	24	32	27	260	**EVW18LROMD**	250	250
	22	G 3/4 A	19	18	32	35	27.5	55.0	16	33	44	27	36	32	355	**EVW22LROMD**	160	160
	28	G 1 A	24	23	39	38	30.5	59.5	18	34	47	36	41	41	542	**EVW28LROMD**	160	160
	35	G 1 1/4 A	30	30	49	45	34.5	68.5	20	39	56	41	50	50	832	**EVW35LROMD**	160	160
	42	G 1 1/2 A	36	36	55	51	40.0	79.0	22	42	63	50	60	55	1303	**EVW42LROMD**	160	160
S[4]	06	G 1/4 A	4	4	18	23	16.0	40.0	12	28	31	12	17	19	79	**EVW06SROMD**	400	400
	08	G 1/4 A	5	5	18	24	17.0	42.5	12	30	32	14	19	19	98	**EVW08SROMD**	400	400
	10	G 3/8 A	7	7	22	25	17.5	46.0	12	31	34	17	22	22	148	**EVW10SROMD**	400	400
	12	G 3/8 A	8	8	22	29	21.5	48.0	12	33	38	17	24	22	169	**EVW12SROMD**	400	400
	16	G 1/2 A	12	12	26	33	24.5	56.0	14	37	43	24	30	27	304	**EVW16SROMD**	400	400
	20	G 3/4 A	16	16	32	37	26.5	65.0	16	42	48	27	36	32	428	**EVW20SROMD**	400	400
	25	G 1 A	20	20	39	42	30.0	73.0	18	47	54	36	46	41	825	**EVW25SROMD**	250	250
	30	G 1 1/4 A	25	25	49	49	35.5	78.5	20	50	62	41	50	50	1134	**EVW30SROMD**	160	160
	38	G 1 1/2 A	32	32	55	57	41.0	92.5	22	57	72	50	60	55	1713	**EVW38SROMD**	160	160

[1]) Pressure shown = item deliverable

[3]) L = light series; [4]) S = heavy series

$\frac{\text{PN (bar)}}{10}$ = PN (MPa)

Delivery without nut and ring. Information on ordering complete fittings see page I7.

*Please add the **suffixes** below according to the material/surface required.

Order code suffixes		
Material	Suffix surface and material	Example
Steel, zinc plated, Cr(VI)-free	CF	EVW16SROMDCF
Stainless Steel	71	EVW16SROMD71

EVT-M Assembled adjustable standpipe branch tee

EO 24° cone end / Male metric thread – metal sealing edge (ISO 9974)

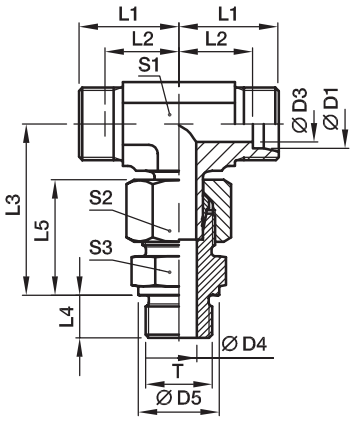

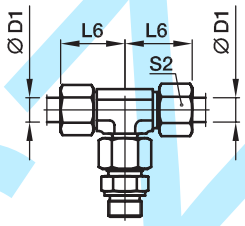

Pre-assembled, complete with straight male stud connector (with cutting face). Final assembly (in appropriate body) at least 1/4 turn beyond the point of clearly perceptible resistance.

Series	D1	T	D3	D4	D5	L1	L2	L3	L4	L5	L6	S1	S2	S3	Weight g/1 piece	Order code*	PN (bar)[1] CF	PN (bar)[1] 71
L[3]	06	M 10×1.0	4	4	14	19	12.0	34.5	8	23	27	12	14	14	48	**EVT06LMOMD**	315	315
	08	M 12×1.5	6	6	17	21	14.0	37.5	12	25	29	12	17	17	68	**EVT08LMOMD**	315	315
	10	M 14×1.5	8	7	19	22	15.0	40.0	12	26	30	14	19	19	88	**EVT10LMOMD**	315	315
	12	M 16×1.5	10	9	21	24	17.0	43.0	12	27	32	17	22	22	116	**EVT12LMOMD**	315	315
	15	M 18×1.5	12	11	23	28	21.0	46.0	12	29	36	19	27	24	185	**EVT15LMOMD**	250	250
	18	M 22×1.5	15	14	27	31	23.5	50.0	14	31	40	24	32	27	272	**EVT18LMOMD**	250	250
	22	M 26×1.5	19	18	31	35	27.5	55.5	16	33	44	27	36	32	367	**EVT22LMOMD**	160	160
	28	M 33×2.0	24	23	39	38	30.5	61.0	18	34	47	36	41	41	565	**EVT28LMOMD**	160	160
	35	M 42×2.0	30	30	49	45	34.5	72.0	20	39	56	41	50	50	905	**EVT35LMOMD**	160	160
	42	M 48×2.0	36	36	55	51	40.0	79.0	22	42	63	50	60	55	1282	**EVT42LMOMD**	160	160
S[4]	06	M 12×1.5	4	4	17	23	16.0	40.0	12	28	31	12	17	17	85	**EVT06SMOMD**	400	400
	08	M 14×1.5	5	5	19	24	17.0	44.0	12	30	32	14	19	19	118	**EVT08SMOMD**	400	400
	10	M 16×1.5	7	7	21	25	17.5	47.0	12	31	34	17	22	22	149	**EVT10SMOMD**	400	400
	12	M 18×1.5	8	8	23	29	21.5	50.0	12	33	38	17	24	24	200	**EVT12SMOMD**	400	400
	16	M 22×1.5	12	12	27	33	24.5	55.0	14	37	43	24	30	27	327	**EVT16SMOMD**	400	400
	20	M 27×2.0	16	16	32	37	26.5	65.0	16	42	48	27	36	32	482	**EVT20SMOMD**	400	400
	25	M 33×2.0	20	20	39	42	30.0	73.5	18	47	54	36	46	41	906	**EVT25SMOMD**	250	250
	30	M 42×2.0	25	25	49	49	35.5	80.0	20	50	62	41	50	50	1274	**EVT30SMOMD**	160	160
	38	M 48×2.0	32	32	55	57	41.0	92.5	22	57	72	50	60	55	1928	**EVT38SMOMD**	160	160

[1]) Pressure shown = item deliverable

[3]) L = light series; [4]) S = heavy series

$\frac{\text{PN (bar)}}{10}$ = PN (MPa)

Delivery without nut and ring. Information on ordering complete fittings see page I7.

*Please add the **suffixes** below according to the material/surface required.

Order code suffixes		
Material	Suffix surface and material	Example
Steel, zinc plated, Cr(VI)-free	CF	EVT16SMOMDCF
Stainless Steel	71	EVT16SMOMD71

EVT-R Assembled adjustable standpipe branch tee

EO 24° cone end / Male BSPP thread – metal sealing edge (ISO 1179)

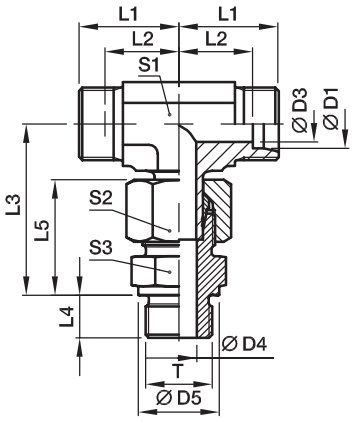

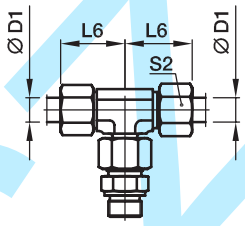

Pre-assembled, complete with straight male stud connector (with cutting face). Final assembly (in appropriate body) at least 1/4 turn beyond the point of clearly perceptible resistance.

Series	D1	T	D3	D4	D5	L1	L2	L3	L4	L5	L6	S1	S2	S3	Weight g/1 piece	Order code*	PN (bar)[1] CF	PN (bar)[1] 71
L[3]	06	G 1/8 A	4	4	14	19	12.0	34.5	8	23	27	12	14	14	48	**EVT06LROMD**	315	315
	08	G 1/4 A	6	6	18	21	14.0	37.5	12	25	29	12	17	19	73	**EVT08LROMD**	315	315
	10	G 1/4 A	8	6	18	22	15.0	40.0	12	26	30	14	19	19	85	**EVT10LROMD**	315	315
	12	G 3/8 A	10	9	22	24	17.0	43.0	12	27	32	17	22	22	118	**EVT12LROMD**	315	315
	15	G 1/2 A	12	11	26	28	21.0	46.5	14	29	36	19	27	27	206	**EVT15LROMD**	250	250
	18	G 1/2 A	15	14	26	31	23.5	50.0	14	31	40	24	32	27	267	**EVT18LROMD**	250	250
	22	G 3/4 A	19	18	32	35	27.5	55.5	16	33	44	27	36	32	367	**EVT22LROMD**	160	160
	28	G 1 A	24	23	39	38	30.5	61.0	18	34	47	36	41	41	565	**EVT28LROMD**	160	160
	35	G 1 1/4 A	30	30	49	45	34.5	72.0	20	39	56	41	50	50	901	**EVT35LROMD**	160	160
	42	G 1 1/2 A	36	36	55	51	40.0	79.0	22	42	63	50	60	55	1277	**EVT42LROMD**	160	160
S[4]	06	G 1/4 A	4	4	18	23	16.0	40.0	12	28	31	12	17	19	90	**EVT06SROMD**	400	400
	08	G 1/4 A	5	5	18	24	17.0	44.0	12	30	32	14	19	19	116	**EVT08SROMD**	400	400
	10	G 3/8 A	7	7	22	25	17.5	47.0	12	31	34	17	22	22	151	**EVT10SROMD**	400	400
	12	G 3/8 A	8	8	22	29	21.5	50.0	12	33	38	17	24	22	190	**EVT12SROMD**	400	400
	16	G 1/2 A	12	12	26	33	24.5	55.0	14	37	43	24	30	27	322	**EVT16SROMD**	400	400
	20	G 3/4 A	16	16	32	37	26.5	65.0	16	42	48	27	36	32	500	**EVT20SROMD**	400	400
	25	G 1 A	20	20	39	42	30.0	73.5	18	47	54	36	46	41	905	**EVT25SROMD**	250	250
	30	G 1 1/4 A	25	25	49	49	35.5	80.0	20	50	62	41	50	50	1275	**EVT30SROMD**	160	160
	38	G 1 1/2 A	32	32	55	57	41.0	92.5	22	57	72	50	60	55	1920	**EVT38SROMD**	160	160

[1]) Pressure shown = item deliverable

[3]) L = light series; [4]) S = heavy series

$\frac{\text{PN (bar)}}{10}$ = PN (MPa)

Delivery without nut and ring. Information on ordering complete fittings see page I7.

*Please add the **suffixes** below according to the material/surface required.

Order code suffixes		
Material	Suffix surface and material	Example
Steel, zinc plated, Cr(VI)-free	CF	EVT16SROMDCF
Stainless Steel	71	EVT16SROMD71

EVL-M Assembled adjustable standpipe run tee

EO 24° cone end / Male metric thread – metal sealing edge (ISO 9974)

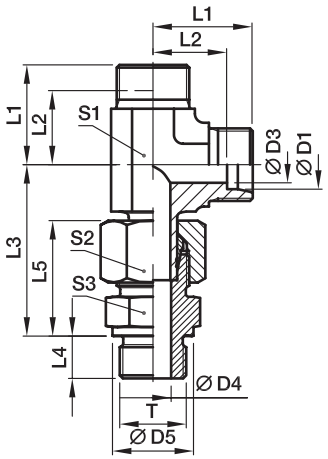

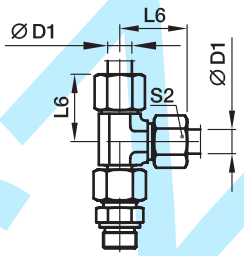

Pre-assembled, complete with straight male stud connector (with cutting face). Final assembly (in appropriate body) at least 1/4 turn beyond the point of clearly perceptible resistance.

Series	D1	T	D3	D4	D5	L1	L2	L3	L4	L5	L6	S1	S2	S3	Weight g/1 piece	Order code*	PN (bar)[1] CF	PN (bar)[1] 71
L[3])	06	M 10×1.0	4	4	14	19	12.0	34.5	8	23	27	12	14	14	48	**EVL06LMOMD**	315	315
	08	M 12×1.5	6	6	17	21	14.0	37.5	12	25	29	12	17	17	73	**EVL08LMOMD**	315	315
	10	M 14×1.5	8	7	19	22	15.0	40.0	12	26	30	14	19	19	89	**EVL10LMOMD**	315	315
	12	M 16×1.5	10	9	21	24	17.0	43.0	12	27	32	17	22	22	118	**EVL12LMOMD**	315	315
	15	M 18×1.5	12	11	23	28	21.0	46.0	12	29	36	19	27	24	186	**EVL15LMOMD**	250	250
	18	M 22×1.5	15	14	27	31	23.5	50.0	14	31	40	24	32	27	269	**EVL18LMOMD**	250	250
	22	M 26×1.5	19	18	31	35	27.5	55.5	16	33	44	27	36	32	364	**EVL22LMOMD**	160	160
	28	M 33×2.0	24	23	39	38	30.5	61.0	18	34	47	36	41	41	556	**EVL28LMOMD**	160	160
	35	M 42×2.0	30	30	49	45	34.5	72.0	20	39	56	41	50	50	900	**EVL35LMOMD**	160	160
	42	M 48×2.0	36	36	55	51	40.0	79.0	22	42	63	50	60	55	1323	**EVL42LMOMD**	160	160
S[4])	06	M 12×1.5	4	4	17	23	16.0	40.0	12	28	31	12	17	17	85	**EVL06SMOMD**	400	400
	08	M 14×1.5	5	5	19	24	17.0	44.0	12	30	32	14	19	19	119	**EVL08SMOMD**	400	400
	10	M 16×1.5	7	7	21	25	17.5	47.0	12	31	34	17	22	22	151	**EVL10SMOMD**	400	400
	12	M 18×1.5	8	8	23	29	21.5	50.0	12	33	38	17	24	24	202	**EVL12SMOMD**	400	400
	16	M 22×1.5	12	12	27	33	24.5	56.0	14	37	43	24	30	27	326	**EVL16SMOMD**	400	400
	20	M 27×2.0	16	16	32	37	26.5	65.0	16	42	48	27	36	32	481	**EVL20SMOMD**	400	400
	25	M 33×2.0	20	20	39	42	30.0	73.5	18	47	54	36	46	41	904	**EVL25SMOMD**	250	250
	30	M 42×2.0	25	25	49	49	35.5	80.0	20	50	62	41	50	50	1263	**EVL30SMOMD**	160	160
	38	M 48×2.0	32	32	55	57	41.0	92.5	22	57	72	50	60	55	1936	**EVL38SMOMD**	160	160

[1]) Pressure shown = item deliverable

[3]) L = light series; [4]) S = heavy series

$\frac{\text{PN (bar)}}{10}$ = PN (MPa)

Delivery without nut and ring. Information on ordering complete fittings see page I7.

*Please add the **suffixes** below according to the material/surface required.

Order code suffixes		
Material	Suffix surface and material	Example
Steel, zinc plated, Cr(VI)-free	CF	EVL16SMOMDCF
Stainless Steel	71	EVL16SMOMD71

EVL-R Assembled adjustable standpipe run tee

EO 24° cone end / Male BSPP thread – metal sealing edge (ISO 1179)

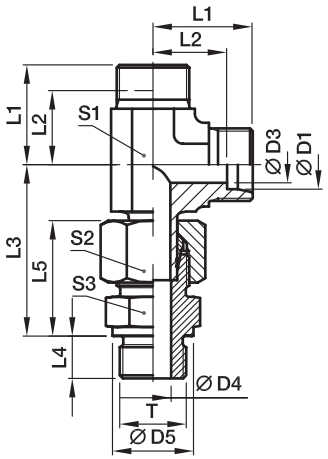

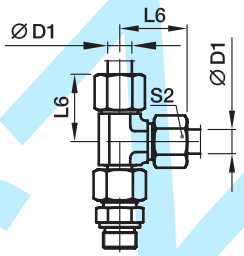

Pre-assembled, complete with straight male stud connector (with cutting face). Final assembly (in appropriate body) at least 1/4 turn beyond the point of clearly perceptible resistance.

Series	D1	T	D3	D4	D5	L1	L2	L3	L4	L5	L6	S1	S2	S3	Weight g/1 piece	Order code*	PN (bar)[1] CF	PN (bar)[1] 71
L[3]	06	G 1/8 A	4	4	14	19	12.0	34.5	8	23	27	12	14	14	48	**EVL06LROMD**	315	315
	08	G 1/4 A	6	6	18	21	14.0	37.5	12	25	29	12	17	19	73	**EVL08LROMD**	315	315
	10	G 1/4 A	8	6	18	22	15.0	40.0	12	26	30	14	19	19	87	**EVL10LROMD**	315	315
	12	G 3/8 A	10	9	22	24	17.0	43.0	12	27	32	17	22	22	120	**EVL12LROMD**	315	315
	15	G 1/2 A	12	11	26	28	21.0	46.5	14	29	36	19	27	27	207	**EVL15LROMD**	250	250
	18	G 1/2 A	15	14	26	31	23.5	50.0	14	31	40	24	32	27	264	**EVL18LROMD**	250	250
	22	G 3/4 A	19	18	32	35	27.5	55.5	16	33	44	27	36	32	365	**EVL22LROMD**	160	160
	28	G 1 A	24	23	39	38	30.5	61.0	18	34	47	36	41	41	556	**EVL28LROMD**	160	160
	35	G 1 1/4 A	30	30	49	45	34.5	72.0	20	39	56	41	50	50	895	**EVL35LROMD**	160	160
	42	G 1 1/2 A	36	36	55	51	40.0	79.0	22	42	63	50	60	55	1318	**EVL42LROMD**	160	160
S[4]	06	G 1/4 A	4	4	18	23	16.0	40.0	12	28	31	12	17	19	90	**EVL06SROMD**	400	400
	08	G 1/4 A	5	5	18	24	17.0	44.0	12	30	32	14	19	19	117	**EVL08SROMD**	400	400
	10	G 3/8 A	7	7	22	25	17.5	47.0	12	31	34	17	22	22	153	**EVL10SROMD**	400	400
	12	G 3/8 A	8	8	22	29	21.5	50.0	12	33	38	17	24	22	192	**EVL12SROMD**	400	400
	16	G 1/2 A	12	12	26	33	24.5	56.0	14	37	43	24	30	27	321	**EVL16SROMD**	400	400
	20	G 3/4 A	16	16	32	37	26.5	65.0	16	42	48	27	36	32	480	**EVL20SROMD**	400	400
	25	G 1 A	20	20	39	42	30.0	73.5	18	47	54	36	46	41	903	**EVL25SROMD**	250	250
	30	G 1 1/4 A	25	25	49	49	35.5	80.0	20	50	62	41	50	50	1265	**EVL30SROMD**	160	160
	38	G 1 1/2 A	32	32	55	57	41.0	92.5	22	57	72	50	60	55	1928	**EVL38SROMD**	160	160

[1]) Pressure shown = item deliverable

[3]) L = light series; [4]) S = heavy series

$\frac{\text{PN (bar)}}{10}$ = PN (MPa)

Delivery without nut and ring. Information on ordering complete fittings see page I7.

*Please add the **suffixes** below according to the material/surface required.

Order code suffixes		
Material	Suffix surface and material	Example
Steel, zinc plated, Cr(VI)-free	CF	EVL16SROMDCF
Stainless Steel	71	EVL16SROMD71

WEE-R Adjustable locknut elbow

EO 24° cone end / Adjustable BSPP thread – O-ring + retaining ring (ISO 1179)
for ports with small or wide spot face;
differences in D5 in Stainless Steel are only for ports with wide spot face
(e.g. WEE16SRBOMD71)

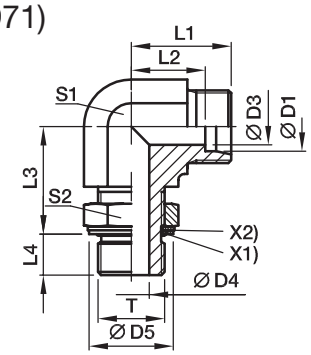

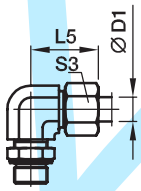

X1) O-ring OR
X2) retaining ring

Series	D1	T	D3	D4	D5[5])	D5[6])	L1	L2	L3	L4	L5	S1	S2	S3	Weight g/1 piece	Order code*	PN (bar)[1]) CF	PN (bar)[1]) 71
LL[2])	04	G 1/8 A	3.0	4.5	15		15	11.3	20	7.1	21	11	14	10	27	**WEE04LLROMD**	100	
	06	G 1/8 A	4.5	4.5	15		15	11.3	20	7.1	21	11	14	12	27	**WEE06LLROMD**	100	
L[3])	06	G 1/8 A	4.0	4.5	15	15.0	21	14.0	19	7.0	29	14	14	14	40	**WEE06LROMD**	315	315
	08	G 1/4 A	6.0	7.5	20	19.5	23	16.0	23	9.0	31	14	19	17	59	**WEE08LROMD**	315	315
	10	G 1/4 A	8.0	7.5	20	19.5	24	17.0	25	9.0	32	19	19	19	82	**WEE10LROMD**	315	315
	12	G 3/8 A	10.0	10.0	23	23.5	26	19.0	28	9.0	34	19	22	22	96	**WEE12LROMD**	250	250
	15	G 1/2 A	12.0	12.5	28	28.5	28	21.0	30	13.0	36	22	27	27	149	**WEE15LROMD**	250	250
	18	G 1/2 A	15.0	12.5	28	28.5	31	24.0	36	13.0	40	27	27	32	221	**WEE18LROMD**	250	250
	22	G 3/4 A	19.0	15.5	33	34.5	35	28.0	36	13.0	44	30	36	36	310	**WEE22LROMD**	160	160
	28	G 1 A	24.0	21.5	41	43.5	38	31.0	44	15.0	47	36	41	41	455	**WEE28LROMD**	160	160
	35	G 1 1/4 A	30.0	27.5	51	52.5	48	38.0	50	15.0	59	50	50	50	1043	**WEE35LROMD**	160	160
	42	G 1 1/2 A	36.0	33.0	56	60.0	49	38.0	52	15.0	61	50	55	60	994	**WEE42LROMD**	160	160
S[4])	06	G 1/4 A	4.0	7.5	20	19.5	22	15.0	23	9.0	30	14	19	17	56	**WEE06SROMD**	315	315
	08	G 1/4 A	5.0	7.5	20	19.5	24	17.0	27	9.0	32	19	19	19	88	**WEE08SROMD**	315	315
	10	G 3/8 A	7.0	10.0	23	23.5	25	18.0	29	9.0	34	19	22	22	98	**WEE10SROMD**	250	250
	12	G 3/8 A	8.0	10.0	23	23.5	29	22.0	29	9.0	38	22	22	24	128	**WEE12SROMD**	250	250
	16	G 1/2 A	12.0	12.5	28	28.5	33	25.0	36	13.0	43	27	27	30	234	**WEE16SROMD**	250	250
	20	G 3/4 A	16.0	15.5	33	34.5	38	28.0	39	12.0	49	30	36	36	344	**WEE20SROMD**	250	250
	25	G 1 A	20.0	21.5	41	43.5	42	30.0	44	14.0	54	36	41	46	533	**WEE25SROMD**	250	250
	30	G 1 1/4 A	25.0	27.5	51	52.5	49	36.0	49	15.0	62	50	50	50	1085	**WEE30SROMD**	160	160
	38	G 1 1/2 A	32.0	33.0	56	60.0	50	34.0	55	15.0	65	50	55	60	1116	**WEE38SROMD**	160	160

[1]) Pressure shown = item deliverable
[2]) LL = very light series; [3]) L = light series; [4]) S = heavy series

$\frac{\text{PN (bar)}}{10}$ = PN (MPa)

Delivery without nut and ring. Information on ordering complete fittings or alternative sealing materials see page I7.

[5]) Steel; [6]) Stainless Steel

*Please add the **suffixes** below according to the material/surface required.

Order code suffixes			
Material	Suffix surface and material	Example	Standard sealing material (no additonal. suffix needed)
Steel, zinc plated, Cr(VI)-free	CF	WEE16SROMDCF	NBR
Stainless Steel	71	WEE16SRBOMD71	VIT

Adjustable locknut elbow, branch tee, run tee or 45° elbow

On customer request!

WEE Adjustable locknut elbow
EO 24° cone end/Adjustable thread

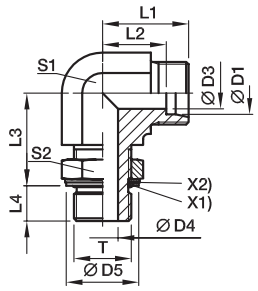

T	Order code	Surface
metric thread – O-ring + retaining ring	WEE…MOMD	CF
metric thread – O-ring (ISO 6149)	WEE…MOROMD	CF
UN/UNF thread – O-ring (ISO 11926)	WEE…UNFOMD	CF

TEE Adjustable locknut branch tee
EO 24° cone end/Adjustable thread

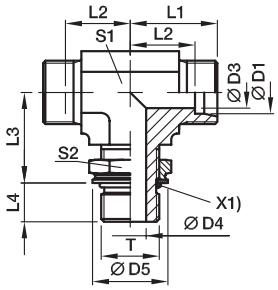

T	Order code	Surface
metric thread – O-ring + retaining ring	TEE…MOMD	CF
metric thread – O-ring (ISO 6149)	TEE…MOROMD	CF
UN/UNF thread – O-ring (ISO 11926)	TEE…UNFOMD	CF
BSPP thread – O-ring + retaining ring (ISO 1179)	TEE…ROMD	CF

LEE Adjustable locknut run tee
EO 24° cone end/Adjustable thread

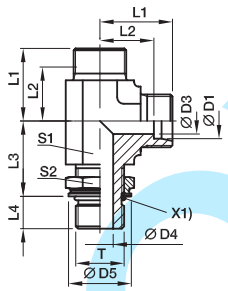

T	Order code	Surface
metric thread – O-ring + retaining ring	LEE…MOMD	CF
metric thread – O-ring (ISO 6149)	LEE…MOROMD	CF
UN/UNF thread – O-ring (ISO 11926)	LEE…UNFOMD	CF
BSPP thread – O-ring + retaining ring (ISO 1179)	LEE…ROMD	CF

VEE Adjustable locknut 45° elbow
EO 24° cone end/Adjustable thread

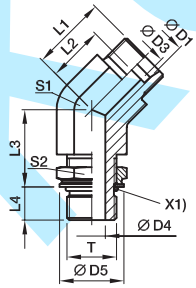

T	Order code	Surface
metric thread – O-ring + retaining ring	VEE…MOMD	CF
metric thread – O-ring (ISO 6149)	VEE…MOROMD	CF
UN/UNF thread – O-ring (ISO 11926)	VEE…UNFOMD	CF
BSPP thread – O-ring + retaining ring (ISO 1179)	VEE…ROMD	CF

WH-M-KDS High pressure banjo elbow

EO 24° cone end / Male metric thread with soft seal ring

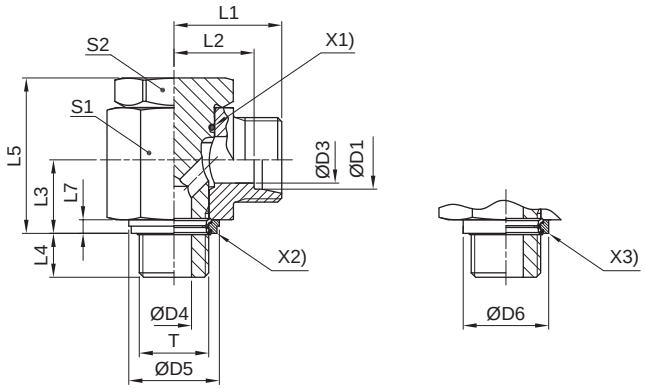

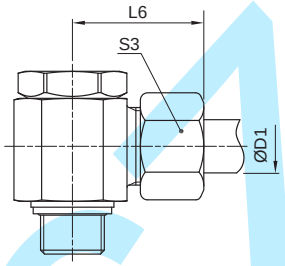

X1) O-ring OR
X2) Sealing ring KDS (for aports with small spot face, ISO 9974)
X3) Sealing ring KD (for ports with wide spot face, ISO 9974)

Series	D1	T	D3	D4	D5 KDS	D6 KD	L1	L2	L3	L4	L5	L6	L7	S1	S2	S3	Weight g/1 piece	Order code*	PN (bar)[1] CF	PN (bar)[1] 71
L[3]	06	M 10×1.0	4	4.5	14.9	17.0	19.0	12.0	10.5	8	24.0	27	2.5	17	17	14	54	**WH06LMKDSOMD**	315	315
	08	M 12×1.5	6	6.0	17.0	22.0	21.5	14.5	14.0	12	30.0	29	3.0	22	19	17	97	**WH08LMKDSOMD**	315	315
	10	M 14×1.5	8	6.0	18.9	22.5	22.5	15.5	14.0	12	30.0	30	3.0	22	19	19	104	**WH10LMKDSOMD**	315	315
	12	M 16×1.5	10	7.5	21.9	27.0	25.0	18.0	16.5	12	36.0	33	3.0	27*	24	22	180	**WH12LMKDSOMD**	315	315
	15	M 18×1.5	11	9.0	23.9	29.0	27.5	21.5	18.5	12	39.5	37	3.0	30	27	27	244	**WH15LMKDSOMD**	315	315
	18	M 22×1.5	15	12.0	26.9	32.0	28.5	21.0	21.5	14	45.0	37	4.5	32	30	32	327	**WH18LMKDSOMD**	315	315
	22	M 26×1.5	19	17.0	31.9	41.0	35.0	27.5	24.0	16	53.0	44	3.5	41	36	36	573	**WH22LMKDSOMD**	160	160
	28	M 33×2.0	24	21.0	39.9	46.0	39.5	32.0	30.5	18	66.0	49	3.5	50	46	41	1017	**WH28LMKDSOMD**	160	160
	35	M 42×2.0	30	27.0	49.9	57.0	46.5	36.0	35.5	20	76.0	58	3.5	60	55	50	1512	**WH35LMKDSOMD**	160	160
	42	M 48×2.0	36	34.0	55.9	64.0	51.5	40.5	40.5	22	87.0	63	3.5	70	60	60	2217	**WH42LMKDSOMD**	160	160
S[4]	06	M 12×1.5	4	6.0	17.0	22.0	23.5	16.5	14.0	12	30.0	31	3.0	22	19	17	104	**WH06SMKDSOMD**	400	400
	08	M 14×1.5	5	6.0	18.9	22.5	23.5	16.5	14.0	12	30.0	31	3.0	22	19	19	110	**WH08SMKDSOMD**	400	400
	10	M 16×1.5	7	7.5	21.9	27.0	26.0	18.5	16.5	12	36.0	35	3.0	27	24	22	186	**WH10SMKDSOMD**	400	400
	12	M 18×1.5	8	9.0	23.9	29.0	27.5	20.0	18.5	12	39.5	36	3.0	27*	27	24	246	**WH12SMKDSOMD**	400	400
	16	M 22×1.5	12	12.0	26.9	32.0	30.5	22.0	21.5	14	45.0	40	4.5	32	30	30	327	**WH16SMKDSOMD**	315	315
	20	M 27×2.0	16	16.0	32.9	41.0	37.0	26.5	24.0	16	53.0	48	3.5	41	36	36	598	**WH20SMKDSOMD**	315	315
	25	M 33×2.0	20	21.0	39.9	46.0	43.5	31.5	30.5	18	66.0	56	3.5	50	46	46	1055	**WH25SMKDSOMD**	250	250
	30	M 42×2.0	25	27.0	49.9	57.0	50.5	37.0	35.5	20	76.0	64	3.5	60	55	50	1572	**WH30SMKDSOMD**	160	160
	38	M 48×2.0	32	34.0	55.9	64.0	57.5	41.5	40.5	22	87.0	72	3.5	70	60	60	2317	**WH38SMKDSOMD**	160	160

[1]) Pressure shown = item deliverable
[3]) L = light series; [4]) S = heavy series

$\frac{\text{PN (bar)}}{10}$ = PN (MPa)

Delivery without nut and ring. Information on ordering complete fittings or alternative sealing materials see page I7.

***S1=SW30 in 1.4571**

*Please add the **suffixes** below according to the material/surface required.

Order code suffixes			
Material	Suffix surface and material	Example	Standard sealing material (no additonal. suffix needed)
Steel, zinc plated, Cr(VI)-free	CF	WH16SMKDSOMDCF	NBR
Stainless Steel	71	WH16SMKDOMD71	VIT/PTFE

Stainless Steel only with sealing ring KD available!
Replace KDS by KD in the order code.

WH-M High pressure banjo elbow

EO 24° cone end / Male metric thread with metal sealing ring

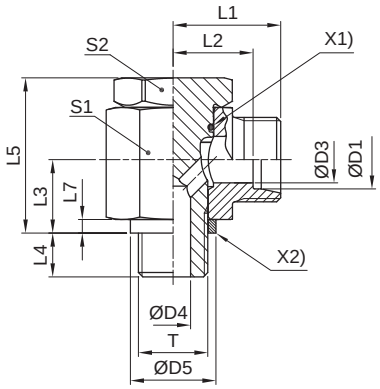

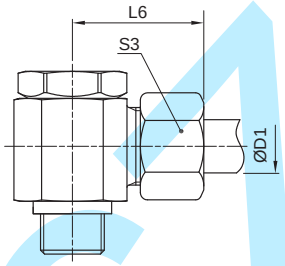

X1) O-ring OR
X2) Sealing ring DKA

Series	D1	T	D3	D4	D5	L1	L2	L3	L4	L5	L6	L7	S1	S2	S3	Weight g/1 piece	Order code*	PN (bar)[1] CF	PN (bar)[1] 71
L[3]	06	M 10×1.0	4	4.5	14	19.0	12.0	10.5	8	24.0	27	2.5	17	17	14	54	**WH06LM0MD**	250	250
	08	M 12×1.5	6	6.0	17	21.5	14.5	14.0	12	30.0	29	3.0	22	19	17	97	**WH08LM0MD**	250	250
	10	M 14×1.5	8	6.0	19	22.5	15.5	14.0	12	30.0	30	3.0	22	19	19	104	**WH10LM0MD**	250	250
	12	M 16×1.5	10	7.5	21	25.0	18.0	16.5	12	36.0	33	3.0	27	24	22	180	**WH12LM0MD**	250	250
	15	M 18×1.5	11	9.0	23	27.5	21.5	18.5	12	39.5	37	3.0	30	27	27	243	**WH15LM0MD**	250	250
	18	M 22×1.5	15	12.0	27	28.5	21.0	21.5	14	45.0	37	4.5	32	30	32	326	**WH18LM0MD**	250	250
	22	M 26×1.5	19	17.0	31	35.0	27.5	24.0	16	53.0	44	3.5	41	36	36	574	**WH22LM0MD**	160	160
	28	M 33×2.0	24	21.0	39	39.5	32.0	30.5	18	66.0	49	3.5	50	46	41	1016	**WH28LM0MD**	160	160
	35	M 42×2.0	30	27.0	49	46.5	36.0	35.5	20	76.0	58	3.5	60	55	50	1512	**WH35LM0MD**	160	160
	42	M 48×2.0	36	34.0	55	51.5	40.5	40.5	22	87.0	63	3.5	70	60	60	2216	**WH42LM0MD**	160	160
S[4]	06	M 12×1.5	4	6.0	17	23.5	16.5	14.0	12	30.0	31	3.0	22	19	17	104	**WH06SM0MD**	315	315
	08	M 14×1.5	5	6.0	19	23.5	16.5	14.0	12	30.0	31	3.0	22	19	19	111	**WH08SM0MD**	315	315
	10	M 16×1.5	7	7.5	21	26.0	18.5	16.5	12	36.0	35	3.0	27	24	22	186	**WH10SM0MD**	315	315
	12	M 18×1.5	8	9.0	23	27.5	20.0	18.5	12	39.5	36	3.0	27*	27	24	246	**WH12SM0MD**	315	315
	16	M 22×1.5	12	12.0	27	30.5	22.0	21.5	14	45.0	40	4.5	32	30	30	326	**WH16SM0MD**	315	315
	20	M 27×2.0	16	16.0	32	37.0	26.5	24.0	16	53.0	48	3.5	41	36	36	596	**WH20SM0MD**	160	160
	25	M 33×2.0	20	21.0	39	43.5	31.5	30.5	18	66.0	56	3.5	50	46	46	1055	**WH25SM0MD**	160	160
	30	M 42×2.0	25	27.0	49	50.5	37.0	35.5	20	76.0	64	3.5	60	55	50	1572	**WH30SM0MD**	160	160
	38	M 48×2.0	32	34.0	55	57.5	41.5	40.5	22	87.0	72	3.5	70	60	60	2316	**WH38SM0MD**	160	160

[1]) Pressure shown = item deliverable

[3]) L = light series; [4]) S = heavy series

$\frac{\text{PN (bar)}}{10}$ = PN (MPa)

Delivery without nut and ring. Information on ordering complete fittings or alternative sealing materials see page I7.

***S1=SW30 in 1.4571**

*Please add the **suffixes** below according to the material/surface required.

Order code suffixes			
Material	Suffix surface and material	Example	Standard sealing material (no additonal. suffix needed)
Steel, zinc plated, Cr(VI)-free	CF	WH16SMOMDCF	NBR
Stainless Steel	71	WH16SMOMD71	VIT

WH-R-KDS High pressure banjo elbow

EO 24° cone end / Male BSPP thread with soft seal ring

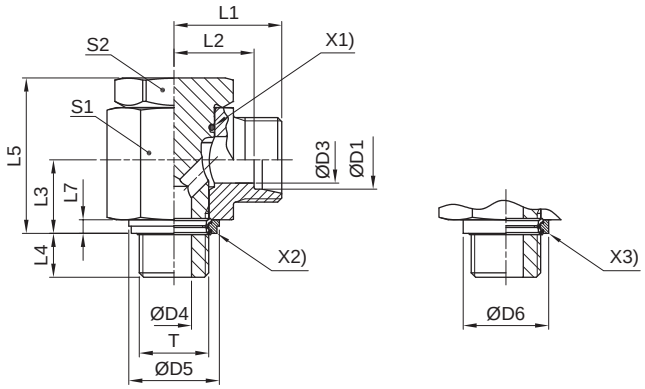

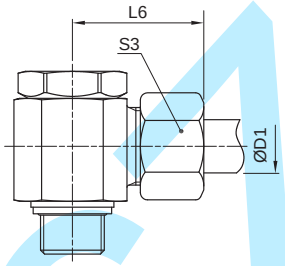

X1) O-ring OR
X2) Sealing ring KDS (for ports with small spot face, ISO 1179)
X3) Sealing ring KD (for ports with wide spot face, ISO 1179)

Series	D1	T	D3	D4	D5 KDS	D6 KD	L1	L2	L3	L4	L5	L6	L7	S1	S2	S3	Weight g/1 piece	Order code*	PN (bar)[1] CF	PN (bar)[1] 71
L[3]	06	G 1/8 A	4	4.5	14.9	17	19.0	12.0	10.5	8	24	27	2.5	17	17	14	53	**WH06LRKDSOMD**	315	315
	08	G 1/4 A	6	6.0	18.9	22	21.5	14.5	14.0	12	30	29	3.0	22	19	17	101	**WH08LRKDSOMD**	315	315
	10	G 1/4 A	8	6.0	18.9	22	22.5	15.5	14.0	12	30	30	3.0	22	19	19	102	**WH10LRKDSOMD**	315	315
	12	G 3/8 A	10	7.5	21.9	27	25.0	18.0	16.5	12	36	33	3.0	27	24	22	181	**WH12LRKDSOMD**	315	315
	15	G 1/2 A	12	11.0	26.9	32	28.5	21.5	21.5	14	45	37	4.5	32	30	27	312	**WH15LRKDSOMD**	315	315
	18	G 1/2 A	15	11.0	26.9	32	28.5	21.0	21.5	14	45	37	4.5	32	30	32	319	**WH18LRKDSOMD**	315	315
	22	G 3/4 A	19	17.0	32.9	41	35.0	27.5	24.0	16	53	44	3.5	41	36	36	578	**WH22LRKDSOMD**	160	160
	28	G 1 A	24	21.0	39.9	46	39.5	32.0	30.5	18	66	49	3.5	50	46	41	1035	**WH28LRKDSOMD**	160	160
	35	G 1 1/4 A	30	27.0	49.9	57	46.5	36.0	35.5	20	76	58	3.5	60	55	50	1499	**WH35LRKDSOMD**	160	160
	42	G 1 1/2 A	36	34.0	55.9	64	51.5	40.5	40.5	22	87	63	3.5	70	60	60	2196	**WH42LRKDSOMD**	160	160
S[4]	06	G 1/4 A	4	6.0	18.9	22	23.5	16.5	14.0	12	30	31	3.0	22	19	17	107	**WH06SRKDSOMD**	400	400
	08	G 1/4 A	5	6.0	18.9	22	23.5	16.5	14.0	12	30	31	3.0	22	19	19	107	**WH08SRKDSOMD**	400	400
	10	G 3/8 A	7	7.5	21.9	27	26.0	18.5	16.5	12	36	35	3.0	27	24	22	188	**WH10SRKDSOMD**	400	400
	12	G 3/8 A	8	7.5	21.9	27	26.0	18.5	16.5	12	36	35	3.0	27*	24	24	190	**WH12SRKDSOMD**	400	400
	16	G 1/2 A	12	11.0	26.9	32	30.5	22.0	21.5	14	45	40	4.5	32	30	30	324	**WH16SRKDSOMD**	315	315
	20	G 3/4 A	16	17.0	32.9	41	37.0	26.5	24.0	16	53	48	3.5	41	36	36	588	**WH20SRKDSOMD**	315	315
	25	G 1 A	20	21.0	39.9	46	43.5	31.5	30.5	18	66	56	3.5	50	46	46	1073	**WH25SRKDSOMD**	250	250
	30	G 1 1/4 A	25	27.0	49.9	57	50.5	37.0	35.5	20	76	64	3.5	60	55	50	1559	**WH30SRKDSOMD**	160	160
	38	G 1 1/2 A	32	34.0	55.9	64	57.5	41.5	40.5	22	87	72	3.5	70	60	60	2296	**WH38SRKDSOMD**	160	160

[1]) Pressure shown = item deliverable
[3]) L = light series; [4]) S = heavy series

$\frac{\text{PN (bar)}}{10}$ = PN (MPa)

Delivery without nut and ring. Information on ordering complete fittings or alternative sealing materials see page I7.

*Please add the **suffixes** below according to the material/surface required.

Order code suffixes			
Material	Suffix surface and material	Example	Standard sealing material (no additonal. suffix needed)
Steel, zinc plated, Cr(VI)-free	CF	WH16SRKDSOMDCF	NBR
Stainless Steel	71	WH16SRKDOMD71	VIT/PTFE

Stainless Steel only with sealing ring KD available!
Replace KDS by KD in the order code.

WH-R High pressure banjo elbow

EO 24° cone end / Male BSPP thread with metal sealing ring

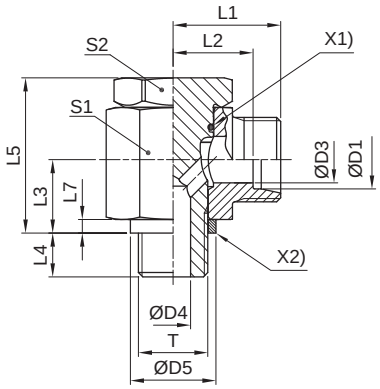

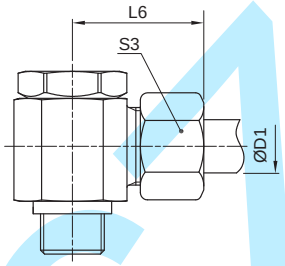

X1) O-ring OR
X2) Sealing ring DKA

Series	D1	T	D3	D4	D5	L1	L2	L3	L4	L5	L6	L7	S1	S2	S3	Weight g/1 piece	Order code*	PN (bar)[1] CF	71	MS
L[3])	06	G 1/8 A	4	4.5	14	19.0	12.0	10.5	8	24	27	2.5	17	17	14	53	**WH06LROMD**	250	250	160
	08	G 1/4 A	6	6.0	18	21.5	14.5	14.0	12	30	29	3.0	22	19	17	101	**WH08LROMD**	250	250	160
	10	G 1/4 A	8	6.0	18	22.5	15.5	14.0	12	30	30	3.0	22	19	19	102	**WH10LROMD**	250	250	160
	12	G 3/8 A	10	7.5	22	25.0	18.0	16.5	12	36	33	3.0	27	24	22	181	**WH12LROMD**	250	250	160
	15	G 1/2 A	12	11.0	26	28.5	21.5	21.5	14	45	37	4.5	32	30	27	311	**WH15LROMD**	250	250	160
	18	G 1/2 A	15	11.0	26	28.5	21.0	21.5	14	45	37	4.5	32	30	32	319	**WH18LROMD**	250	250	160
	22	G 3/4 A	19	17.0	32	35.0	27.5	24.0	16	53	44	3.5	41	36	36	577	**WH22LROMD**	160	160	
	28	G 1 A	24	21.0	39	39.5	32.0	30.5	18	66	49	3.5	50	46	41	1034	**WH28LROMD**	160	160	
	35	G 1 1/4 A	30	27.0	57	46.5	36.0	35.5	20	76	58	3.5	60	55	50	1500	**WH35LROMD**	160	160	
	42	G 1 1/2 A	36	34.0	55	51.5	40.5	40.5	22	87	63	3.5	70	60	60	2195	**WH42LROMD**	160	160	
S[4])	06	G 1/4 A	4	6.0	18	23.5	16.5	14.0	12	30	31	3.0	22	19	17	107	**WH06SROMD**	315	315	200
	08	G 1/4 A	5	6.0	18	23.5	16.5	14.0	12	30	31	3.0	22	19	19	107	**WH08SROMD**	315	315	200
	10	G 3/8 A	7	7.5	22	26.0	18.5	16.5	12	36	35	3.0	27	24	22	188	**WH10SROMD**	315	315	200
	12	G 3/8 A	8	7.5	22	26.0	18.5	16.5	12	36	35	3.0	27*	24	24	190	**WH12SROMD**	315	315	200
	16	G 1/2 A	12	11.0	26	30.5	22.0	21.5	14	45	40	4.5	32	30	30	317	**WH16SROMD**	315	315	
	20	G 3/4 A	16	17.0	32	37.0	26.5	24.0	16	53	48	3.5	41	36	36	587	**WH20SROMD**	160	160	
	25	G 1 A	20	21.0	39	43.5	31.5	30.5	18	66	56	3.5	50	46	46	1072	**WH25SROMD**	160	160	
	30	G 1 1/4 A	25	27.0	49	50.5	37.0	35.5	20	76	64	3.5	60	55	50	1560	**WH30SROMD**	160	160	
	38	G 1 1/2 A	32	34.0	55	57.5	41.5	40.5	22	87	72	3.5	70	60	60	2295	**WH38SROMD**	160	160	

[1]) Pressure shown = item deliverable

[3]) L = light series; [4]) S = heavy series

$\frac{PN\ (bar)}{10}$ = PN (MPa)

Delivery without nut and ring. Information on ordering complete fittings or alternative sealing materials see page I7.

*Please add the **suffixes** below according to the material/surface required

Order code suffixes			
Material	Suffix surface and material	Example	Standard sealing material (no additonal. suffix needed)
Steel, zinc plated, Cr(VI)-free	CF	WH16SROMDCF	NBR
Stainless Steel	71	WH16SROMD71	VIT
Brass	MS	WH18LROMDMS	NBR

KOVOSTAV.CZ

TH-M-KDS High pressure banjo tee

EO 24° cone end / Male metric thread with soft seal ring

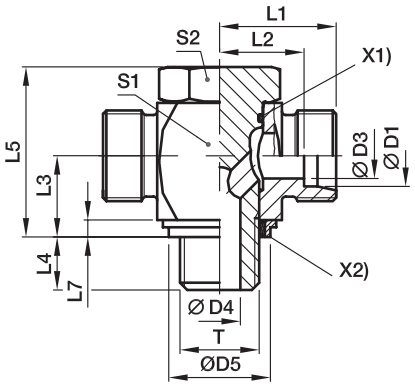

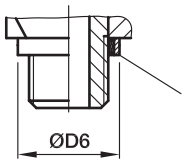

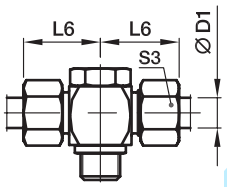

X1) O-ring OR
X2) Sealing ring KDS (for ports with small spot face, ISO 9974)
X3) Sealing ring KD (for ports with wide spot face, ISO 9974)

Series	D1	T	D3	D4	D5 KDS	D6 KD	L1	L2	L3	L4	L5	L6	L7	S1	S2	S3	Weight g/1 piece	Order code*	PN (bar)[1] CF	PN (bar)[1] 71
L[3]	06	M 10×1.0	4	4.5	14.9	17.0	19.0	12.0	10.5	8	24.0	27	2.5	17	17	14	59	**TH06LMKDSOMD**	315	315
	08	M 12×1.5	6	6.0	17.0	22.0	21.5	14.5	14.0	12	30.0	29	3.0	22	19	17	104	**TH08LMKDSOMD**	315	315
	10	M 14×1.5	8	6.0	18.9	22.5	22.5	15.5	14.0	12	30.0	30	3.0	22	19	19	112	**TH10LMKDSOMD**	315	315
	12	M 16×1.5	10	7.5	21.9	27.0	25.0	18.0	16.5	12	36.0	33	3.0	27	24	22	192	**TH12LMKDSOMD**	315	315
	15	M 18×1.5	11	9.0	23.9	29.0	27.5	21.5	18.5	12	39.5	37	3.0	30	27	27	258	**TH15LMKDSOMD**	315	315
	18	M 22×1.5	15	12.0	26.9	32.0	28.5	21.0	21.5	14	45.0	37	4.5	32	30	32	337	**TH18LMKDSOMD**	315	315
	22	M 26×1.5	19	17.0	31.9	41.0	35.0	27.5	24.0	16	53.0	44	3.5	41	36	36	589	**TH22LMKDSOMD**	160	160
	28	M 33×2.0	24	21.0	39.9	46.0	39.5	32.0	30.5	18	66.0	49	3.5	50	46	41	1072	**TH28LMKDSOMD**	160	160
	35	M 42×2.0	30	27.0	49.9	57.0	46.5	36.0	35.5	20	76.0	58	3.5	60	55	50	1778	**TH35LMKDSOMD**	160	160
	42	M 48×2.0	36	34.0	55.9	64.0	51.5	40.5	40.5	22	87.0	63	3.5	70	60	60	2566	**TH42LMKDSOMD**	160	160
S[4]	06	M 12×1.5	4	6.0	17.0	22.0	23.5	16.5	14.0	12	30.0	31	3.0	22	19	17	112	**TH06SMKDSOMD**	400	400
	08	M 14×1.5	5	6.0	18.9	22.5	23.5	16.5	14.0	12	30.0	31	3.0	22	19	19	123	**TH08SMKDSOMD**	400	400
	10	M 16×1.5	7	7.5	21.9	27.0	26.0	18.5	16.5	12	36.0	35	3.0	27	24	22	200	**TH10SMKDSOMD**	400	400
	12	M 18×1.5	8	9.0	23.9	29.0	27.5	20.0	18.5	12	39.5	36	3.0	27	27	24	261	**TH12SMKDSOMD**	400	400
	16	M 22×1.5	12	12.0	26.9	32.0	30.5	22.0	21.5	14	45.0	40	4.5	32	30	30	351	**TH16SMKDSOMD**	315	315
	20	M 27×2.0	16	16.0	32.9	41.0	37.0	26.5	24.0	16	53.0	48	3.5	41	36	36	629	**TH20SMKDSOMD**	315	315
	25	M 33×2.0	20	21.0	39.9	46.0	43.5	31.5	30.5	18	66.0	56	3.5	50	46	46	1106	**TH25SMKDSOMD**	250	250
	30	M 42×2.0	25	27.0	49.9	57.0	50.5	37.0	35.5	20	76.0	64	3.5	60	55	50	1843	**TH30SMKDSOMD**	160	160
	38	M 48×2.0	32	34.0	55.9	64.0	57.5	41.5	40.5	22	87.0	72	3.5	70	60	60	2744	**TH38SMKDSOMD**	160	160

[1]) Pressure shown = item deliverable
[3]) L = light series; [4]) S = heavy series

$\frac{PN\ (bar)}{10}$ = PN (MPa)

Delivery without nut and ring. Information on ordering complete fittings or alternative sealing materials see page I7.

***S1=SW30 in 1.4571**

*Please add the **suffixes** below according to the material/surface required.

Order code suffixes			
Material	Suffix surface and material	Example	Standard sealing material (no additonal. suffix needed)
Steel, zinc plated, Cr(VI)-free	CF	TH16SMKDSOMDCF	NBR
Stainless Steel	71	TH16SMKDOMD71	VIT/PTFE

Stainless Steel only with sealing ring KD available!
Replace KDS by KD in the order code.

TH-M High pressure banjo tee

EO 24° cone end / Male metric thread with metal sealing ring

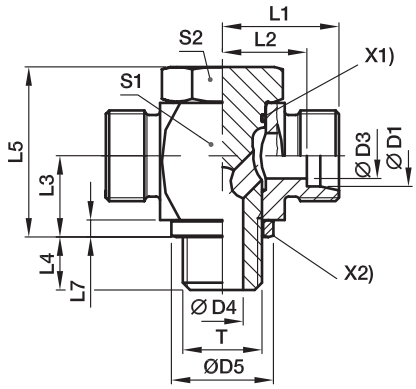

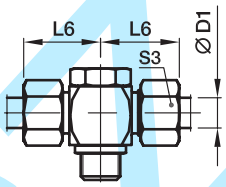

X1) O-ring OR
X2) Sealing ring DKA

Series	D1	T	D3	D4	D5	L1	L2	L3	L4	L5	L6	L7	S1	S2	S3	Weight g/1 piece	Order code*	PN (bar)[1] CF	PN (bar)[1] 71
L[3]	06	M 10×1.0	4	4.5	14	19.0	12.0	10.5	8	24.0	27	2.5	17	17	14	58	**TH06LMOMD**	250	250
	08	M 12×1.5	6	6.0	17	21.5	14.5	14.0	12	30.0	29	3.0	22	19	17	104	**TH08LMOMD**	250	250
	10	M 14×1.5	8	6.0	19	22.5	15.5	14.0	12	30.0	30	3.0	22	19	19	112	**TH10LMOMD**	250	250
	12	M 16×1.5	10	7.5	21	25.0	18.0	16.5	12	36.0	33	3.0	27	24	22	191	**TH12LMOMD**	250	250
	15	M 18×1.5	11	9.0	23	27.5	21.5	18.5	12	39.5	37	3.0	30	27	27	258	**TH15LMOMD**	250	250
	18	M 22×1.5	15	12.0	27	28.5	21.0	21.5	14	45.0	37	4.5	32	30	32	337	**TH18LMOMD**	250	250
	22	M 26×1.5	19	17.0	31	35.0	27.5	24.0	16	53.0	44	3.5	41	36	36	590	**TH22LMOMD**	160	160
	28	M 33×2.0	24	21.0	39	39.5	32.0	30.5	18	66.0	49	3.5	50	46	41	1072	**TH28LMOMD**	160	160
	35	M 42×2.0	30	27.0	49	46.5	36.0	35.5	20	76.0	58	3.5	60	55	50	1778	**TH35LMOMD**	160	160
	42	M 48×2.0	36	34.0	55	51.5	40.5	40.5	22	87.0	63	3.5	70	60	60	2565	**TH42LMOMD**	160	160
S[4]	06	M 12×1.5	4	6.0	17	23.5	16.5	14.0	12	30.0	31	3.0	22	19	17	112	**TH06SMOMD**	315	315
	08	M 14×1.5	5	6.0	19	23.5	16.5	14.0	12	30.0	31	3.0	22	19	19	124	**TH08SMOMD**	315	315
	10	M 16×1.5	7	7.5	21	26.0	18.5	16.5	12	36.0	35	3.0	27	24	22	200	**TH10SMOMD**	315	315
	12	M 18×1.5	8	9.0	23	27.5	20.0	18.5	12	39.5	36	3.0	27	27	24	261	**TH12SMOMD**	315	315
	16	M 22×1.5	12	12.0	27	30.5	22.0	21.5	14	45.0	40	4.5	32	30	30	350	**TH16SMOMD**	315	315
	20	M 27×2.0	16	16.0	32	37.0	26.5	24.0	16	53.0	48	3.5	41	36	36	628	**TH20SMOMD**	160	160
	25	M 33×2.0	20	21.0	39	43.5	31.5	30.5	18	66.0	56	3.5	50	46	46	1106	**TH25SMOMD**	160	
	30	M 42×2.0	25	27.0	49	50.5	37.0	35.5	20	76.0	64	3.5	60	55	50	1843	**TH30SMOMD**	160	160
	38	M 48×2.0	32	34.0	55	57.5	41.5	40.5	22	87.0	72	3.5	70	60	60	2741	**TH38SMOMD**	160	160

[1]) Pressure shown = item deliverable
[3]) L = light series; [4]) S = heavy series

$\frac{\text{PN (bar)}}{10}$ = PN (MPa)

Delivery without nut and ring. Information on ordering complete fittings or alternative sealing materials see page I7.

***S1=SW30 in 1.4571**

*Please add the **suffixes** below according to the material/surface required.

Order code suffixes			
Material	Suffix surface and material	Example	Standard sealing material (no additonal. suffix needed)
Steel, zinc plated, Cr(VI)-free	CF	TH16SMOMDCF	NBR
Stainless Steel	71	TH16SMOMD71	VIT

TH-R-KDS High pressure banjo tee

EO 24° cone end / Male BSPP thread with soft seal ring

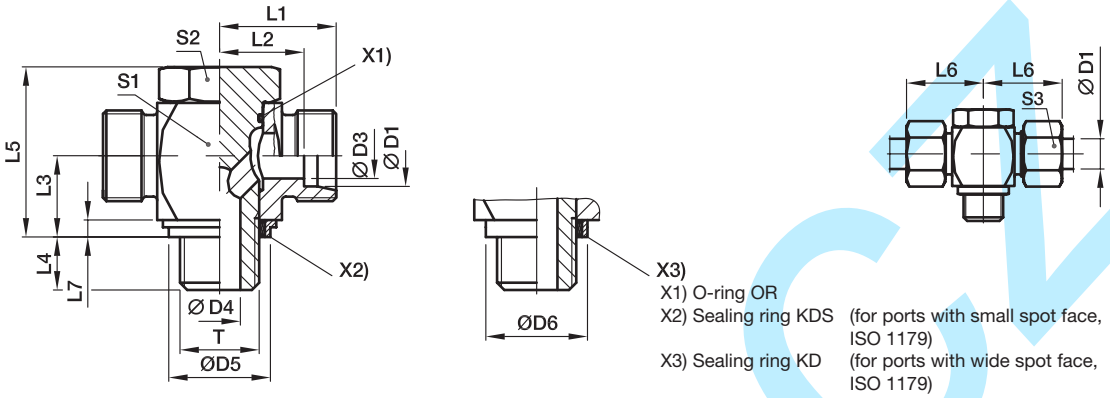

X1) O-ring OR
X2) Sealing ring KDS (for ports with small spot face, ISO 1179)
X3) Sealing ring KD (for ports with wide spot face, ISO 1179)

Series	D1	T	D3	D4	D5 KDS	D6 KD	L1	L2	L3	L4	L5	L6	L7	S1	S2	S3	Weight g/1 piece	Order code*	PN (bar)[1] CF	PN (bar)[1] 71
L[3])	06	G 1/8 A	4	4.5	14.9	17	19.0	12.0	10.5	8	24	27	2.5	17	17	14	58	**TH06LRKDSOMD**	315	315
	08	G 1/4 A	6	6.0	18.9	22	21.5	14.5	14.0	12	30	29	3.0	22	19	17	108	**TH08LRKDSOMD**	315	315
	10	G 1/4 A	8	6.0	18.9	22	22.5	15.5	14.0	12	30	30	3.0	22	19	19	110	**TH10LRKDSOMD**	315	315
	12	G 3/8 A	10	7.5	21.9	27	25.0	18.0	16.5	12	36	33	3.0	27	24	22	193	**TH12LRKDSOMD**	315	315
	15	G 1/2 A	12	11.0	26.9	32	28.5	21.5	21.5	14	45	37	4.5	32	30	27	321	**TH15LRKDSOMD**	315	315
	18	G 1/2 A	15	11.0	26.9	32	28.5	21.0	21.5	14	45	37	4.5	32	30	32	329	**TH18LRKDSOMD**	315	315
	22	G 3/4 A	19	17.0	32.9	41	35.0	27.5	24.0	16	53	44	3.5	41	36	36	585	**TH22LRKDSOMD**	160	160
	28	G 1 A	24	21.0	39.9	46	39.5	32.0	30.5	18	66	49	3.5	50	46	41	1090	**TH28LRKDSOMD**	160	160
	35	G 1 1/4 A	30	27.0	49.9	57	46.5	36.0	35.5	20	76	58	3.5	60	55	50	1765	**TH35LRKDSOMD**	160	160
	42	G 1 1/2 A	36	34.0	55.9	64	51.5	40.5	40.5	22	87	63	3.5	70	60	60	2545	**TH42LRKDSOMD**	160	160
S[4])	06	G 1/4 A	4	6.0	18.9	22	23.5	16.5	14.0	12	30	31	3.0	22	19	17	116	**TH06SRKDSOMD**	400	400
	08	G 1/4 A	5	6.0	18.9	22	23.5	16.5	14.0	12	30	31	3.0	22	19	19	121	**TH08SRKDSOMD**	400	400
	10	G 3/8 A	7	7.5	21.9	27	26.0	18.5	16.5	12	36	35	3.0	27	24	22	201	**TH10SRKDSOMD**	400	400
	12	G 3/8 A	8	7.5	21.9	27	26.0	18.5	16.5	12	36	35	3.0	27	24	24	207	**TH12SRKDSOMD**	400	400
	16	G 1/2 A	12	11.0	26.9	32	30.5	22.0	21.5	14	45	40	4.5	32	30	30	350	**TH16SRKDSOMD**	315	315
	20	G 3/4 A	16	17.0	32.9	41	37.0	26.5	24.0	16	53	48	3.5	41	36	36	620	**TH20SRKDSOMD**	315	315
	25	G 1 A	20	21.0	39.9	46	43.5	31.5	30.5	18	66	56	3.5	50	46	46	1124	**TH25SRKDSOMD**	250	250
	30	G 1 1/4 A	25	27.0	49.9	57	50.5	37.0	35.5	20	76	64	3.5	60	55	50	1830	**TH30SRKDSOMD**	160	160
	38	G 1 1/2 A	32	34.0	55.9	64	57.5	41.5	40.5	22	87	72	3.5	70	60	60	2721	**TH38SRKDSOMD**	160	160

[1]) Pressure shown = item deliverable
[3]) L = light series; [4]) S = heavy series

$\frac{PN\ (bar)}{10}$ = PN (MPa)

Delivery without nut and ring. Information on ordering complete fittings or alternative sealing materials see page I7.

*Please add the **suffixes** below according to the material/surface required.

Order code suffixes			
Material	Suffix surface and material	Example	Standard sealing material (no additonal. suffix needed)
Steel, zinc plated, Cr(VI)-free	CF	TH16SRKDSOMDCF	NBR
Stainless Steel	71	TH16SRKDOMD71	VIT/PTFE

Stainless Steel only with sealing ring KD available!
Replace KDS by KD in the order code.

TH-R High pressure banjo tee

EO 24° cone end / Male BSPP thread with metal sealing ring

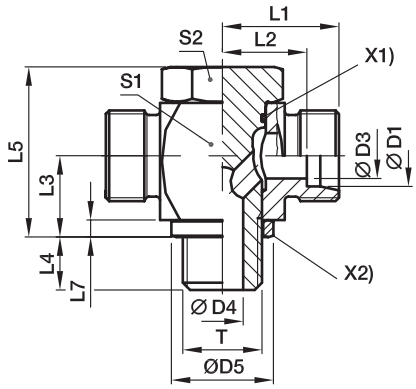

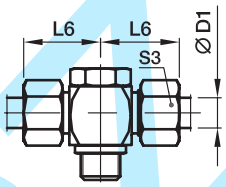

X1) O-ring OR
X2) Sealing ring DKA

Series	D1	T	D3	D4	D5	L1	L2	L3	L4	L5	L6	L7	S1	S2	S3	Weight g/1 piece	Order code*	PN (bar)[1] CF	PN (bar)[1] 71
L[3]	06	G 1/8 A	4	4.5	14	19.0	12.0	10.5	8	24	27	2.5	17	17	14	58	**TH06LROMD**	250	250
	08	G 1/4 A	6	6.0	18	21.5	14.5	14.0	12	30	29	3.0	22	19	17	108	**TH08LROMD**	250	250
	10	G 1/4 A	8	6.0	18	22.5	15.5	14.0	12	30	30	3.0	22	19	19	110	**TH10LROMD**	250	250
	12	G 3/8 A	10	7.5	22	25.0	18.0	16.5	12	36	33	3.0	27	24	22	193	**TH12LROMD**	250	250
	15	G 1/2 A	12	11.0	26	28.5	21.5	21.5	14	45	37	4.5	32	30	27	321	**TH15LROMD**	250	250
	18	G 1/2 A	15	11.0	26	28.5	21.0	21.5	14	45	37	4.5	32	30	32	329	**TH18LROMD**	250	250
	22	G 3/4 A	19	17.0	32	35.0	27.5	24.0	16	53	44	3.5	41	36	36	584	**TH22LROMD**	160	160
	28	G 1 A	24	21.0	39	39.5	32.0	30.5	18	66	49	3.5	50	46	41	1090	**TH28LROMD**	160	160
	35	G 1 1/4 A	30	27.0	57	46.5	36.0	35.5	20	76	58	3.5	60	55	50	1766	**TH35LROMD**	160	160
	42	G 1 1/2 A	36	34.0	55	51.5	40.5	40.5	22	87	63	3.5	70	60	60	2544	**TH42LROMD**	160	160
S[4]	06	G 1/4 A	4	6.0	18	23.5	16.5	14.0	12	30	31	3.0	22	19	17	116	**TH06SROMD**	315	315
	08	G 1/4 A	5	6.0	18	23.5	16.5	14.0	12	30	31	3.0	22	19	19	121	**TH08SROMD**	315	315
	10	G 3/8 A	7	7.5	22	26.0	18.5	16.5	12	36	35	3.0	27	24	22	201	**TH10SROMD**	315	315
	12	G 3/8 A	8	7.5	22	26.0	18.5	16.5	12	36	35	3.0	27	24	24	207	**TH12SROMD**	315	315
	16	G 1/2 A	12	11.0	26	30.5	22.0	21.5	14	45	40	4.5	32	30	30	350	**TH16SROMD**	315	315
	20	G 3/4 A	16	17.0	32	37.0	26.5	24.0	16	53	48	3.5	41	36	36	618	**TH20SROMD**	160	160
	25	G 1 A	20	21.0	39	43.5	31.5	30.5	18	66	56	3.5	50	46	46	1124	**TH25SROMD**	160	160
	30	G 1 1/4 A	25	27.0	49	50.5	37.0	35.5	20	76	64	3.5	60	55	50	1831	**TH30SROMD**	160	160
	38	G 1 1/2 A	32	34.0	55	57.5	41.5	40.5	22	87	72	3.5	70	60	60	2720	**TH38SROMD**	160	160

[1]) Pressure shown = item deliverable

[3]) L = light series; [4]) S = heavy series

$\frac{\text{PN (bar)}}{10}$ = PN (MPa)

Delivery without nut and ring. Information on ordering complete fittings or alternative sealing materials see page I7.

*Please add the **suffixes** below according to the material/surface required.

Order code suffixes			
Material	Suffix surface and material	Example	Standard sealing material (no additonal. suffix needed)
Steel, zinc plated, Cr(VI)-free	CF	TH16SROMDCF	NBR
Stainless Steel	71	TH16SROMD71	VIT

SWVE Metric male stud banjo elbow

SWVE-M EO 24° cone end / Metric male stud with metal seal ring
SWVE-M-KDS EO 24° cone end / Metric male stud with soft seal ring

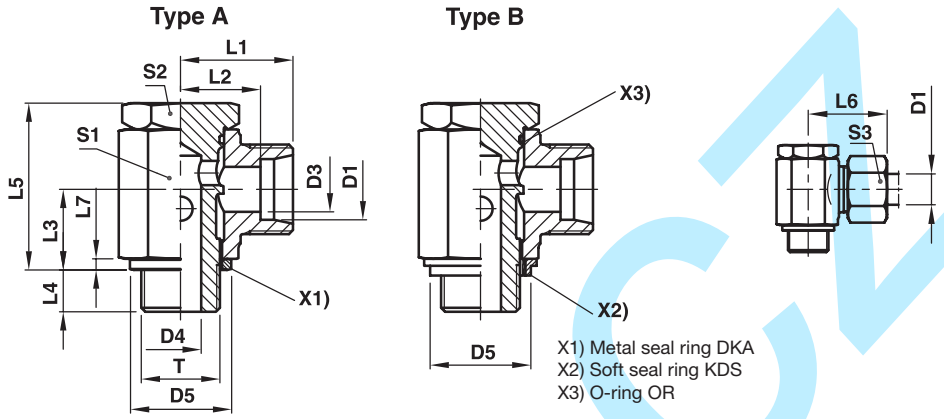

Series	D1	T	D3	D4	DKA D5	KDS D5	L1	L2	L3	L4	L5	L6	L7	S1	S2	S3	Weight g/1 piece	Type A Order code* metal sealed	Type B Order code* soft sealed	PN (bar)[1] CF
LL[2]	04	M 08×1.0	3.0	3.0	12.5		14.5	10.5	8.0	6	17.0	20	2.5	12	12	10	18	**SWVE04LLMOMD**	—	63
	06	M 10×1.0	4.5	5.0	14.0	15	15.5	10.0	10.0	6	21.0	22	2.5	14	14	12	29	**SWVE06LLMOMD**	**SWVE06LLMKDSOMD**	63
	08	M 10×1.0	6.0	5.0	14.0	15	16.5	11.0	10.0	6	21.0	23	2.5	14	14	14	31	**SWVE08LLMOMD**	**SWVE08LLMKDSOMD**	63
L[3]	06	M 10×1.0	4.5	5.0	14.0	15	15.5	10.5	10.0	6	21.5	25	2.5	14	14	14	31	**SWVE06LMOMD**	**SWVE06LMKDSOMD**	160
	08	M 12×1.5	6.0	6.0	17.0	17	19.0	12.0	12.0	9	25.0	27	3.0	17	17	17	51	**SWVE08LMOMD**	**SWVE08LMKDSOMD**	160
	10	M 14×1.5	8.0	6.5	19.0	19	21.0	14.0	13.0	9	27.0	29	3.0	19	19	19	68	**SWVE10LMOMD**	**SWVE10LMKDSOMD**	160
	12	M 16×1.5	10.0	8.5	21.0	22	22.5	15.5	15.0	9	32.0	30	3.0	22	21	22	100	**SWVE12LMOMD**	**SWVE12LMKDSOMD**	100
	15	M 18×1.5	12.0	11.0	23.0	24	24.5	17.5	18.0	9	37.5	33	3.0	24	24	27	138	**SWVE15LMOMD**	**SWVE15LMKDSOMD**	100
	18	M 22×1.5	15.0	13.0	27.0	27	28.0	20.5	21.5	11	44.5	37	4.5	30	27	32	241	**SWVE18LMOMD**	**SWVE18LMKDSOMD**	100
	22	M 26×1.5	19.0	18.0	31.0	32	33.0	25.5	24.0	13	49.0	42	3.5	36	32	36	351	**SWVE22LMOMD**	**SWVE22LMKDSOMD**	100
	28	M 33×2.0	24.0	22.0	39.0	40	39.5	32.0	30.5	14	66.5	49	3.5	50	46	41		**SWVE28LMOMD**	**SWVE28LMKDSOMD**	100
	35	M 42×2.0	30.0	29.0	49.0	50	46.5	36.0	35.5	16	76.0	58	3.5	60	55	50		**SWVE35LMOMD**	**SWVE35LMKDSOMD**	100
	42	M 48×2.0	36.0	35.0	55.0	56	51.5	40.5	40.5	18	86.0	63	3.5	70	60	60		**SWVE42LMOMD**	**SWVE42LMKDSOMD**	100
S[4]	06	M 12×1.5	4.0	6.0	17.0	17	21.0	14.0	12.0	9	25.0	29	3.0	17	17	17	55	**SWVE06SMOMD**	**SWVE06SMKDSOMD**	160
	08	M 14×1.5	5.0	6.5	19.0	19	22.0	15.0	13.0	9	27.0	30	3.0	19	19	19	75	**SWVE08SMOMD**	**SWVE08SMKDSOMD**	160
	10	M 16×1.5	7.0	8.5	21.0	22	23.5	16.0	15.0	9	32.0	32	3.0	22	22	22	106	**SWVE10SMOMD**	**SWVE10SMKDSOMD**	100
	12	M 18×1.5	8.0	11.0	23.0	24	24.5	17.0	18.0	9	37.0	33	3.0	24	24	24	134	**SWVE12SMOMD**	**SWVE12SMKDSOMD**	100
	16	M 22×1.5	12.0	13.0	27.0	27	30.0	21.5	21.5	11	44.5	40	4.5	30	27	30	252	**SWVE16SMOMD**	**SWVE16SMKDSOMD**	100
	20	M 27×2.0	16.0	18.0	32.0	33	35.0	24.5	24.0	13	49.0	46	3.5	36	32	36	363	**SWVE20SMOMD**	**SWVE20SMKDSOMD**	100
	25	M 33×2.0	20.0	22.0	39.0	40	43.5	31.5	30.5	14	66.5	56	3.5	50	46	46		**SWVE25SMOMD**	**SWVE25SMKDSOMD**	100
	30	M 42×2.0	25.0	29.0	49.0	50	50.5	37.0	35.5	16	76.0	64	3.5	60	55	50		**SWVE30SMOMD**	**SWVE30SMKDSOMD**	100
	38	M 48×2.0	32.0	35.0	55.0	56	57.5	41.5	40.5	18	86.0	72	3.5	70	60	60		**SWVE38SMOMD**	**SWVE38SMKDSOMD**	100

[1]) Pressure shown = item deliverable
[2]) LL = very light series; [3]) L = light series; [4]) S = heavy series

$\frac{\text{PN (bar)}}{10}$ = PN (MPa)

Delivery without nut and ring. Information on ordering complete fittings or alternative sealing materials see page I7.

*Please add the **suffixes** below according to the material/surface required.

Order code suffixes			
Material	Suffix surface and material	Example	Standard sealing material (no additonal. suffix needed)
Steel, zinc plated, Cr(VI)-free	CF	SWVE16SMOMDCF	NBR
Steel, zinc plated, Cr(VI)-free	CF	SWVE16SMKDSOMDCF	NBR

SWVE BSPP male stud banjo elbow

SWVE-R EO 24° cone end / BSPP male stud with metal seal ring
SWVE-R-KDS EO 24° cone end / BSPP male stud with soft seal ring

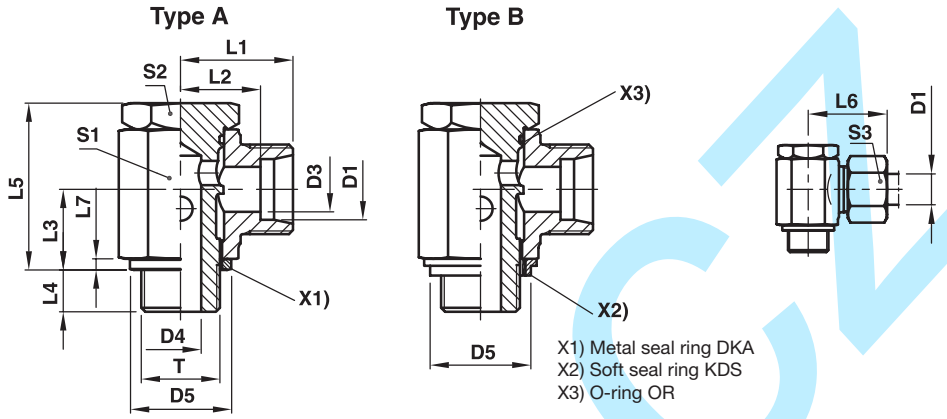

Series	D1	T	D3	D4	DKA D5	KDS D5	L1	L2	L3	L4	L5	L6	L7	S1	S2	S3	Weight g/1 piece	Type A Order code* metal sealed	Type B Order code* soft sealed	PN (bar)[1] CF
LL[2]	04	G 1/8 A	3.0	5.0	14	15	15.5	11.5	10.0	6	21.0	21	2.5	14	14	10	28	**SWVE04LLROMD**	**SWVE04LLRKDSOMD**	63
	06	G 1/8 A	4.5	5.0	14	15	15.5	10.0	10.0	6	21.5	22	2.5	14	14	12	28	**SWVE06LLROMD**	**SWVE06LLRKDSOMD**	63
	08	G 1/8 A	6.0	5.0	14	15	16.5	11.0	10.0	6	21.0	23	2.5	14	14	14	30	**SWVE08LLROMD**	**SWVE08LLRKDSOMD**	63
L[3]	06	G 1/8 A	4.0	5.0	14	15	17.5	10.5	10.0	6	21.0	25	2.5	14	14	14	31	**SWVE06LROMD**	**SWVE06LRKDSOMD**	160
	08	G 1/4 A	6.0	6.5	18	19	20.0	13.0	13.0	9	27.0	28	3.0	19	19	17	65	**SWVE08LROMD**	**SWVE08LRKDSOMD**	160
	10	G 1/4 A	8.0	6.5	18	19	21.0	14.0	13.0	9	27.0	29	3.0	19	19	19	66	**SWVE10LROMD**	**SWVE10LRKDSOMD**	160
	12	G 3/8 A	10.0	8.5	22	22	22.5	15.5	15.0	9	32.0	30	3.0	22	22	22	102	**SWVE12LROMD**	**SWVE12LRKDSOMD**	100
	15	G 1/2 A	12.0	11.0	26	27	26.0	19.0	18.0	11	37.5	34	4.5	27	27	27	171	**SWVE15LROMD**	**SWVE15LRKDSOMD**	100
	18	G 1/2 A	15.0	13.0	26	27	28.0	20.5	21.5	11	44.5	37	4.5	30	27	32	249	**SWVE18LROMD**	**SWVE18LRKDSOMD**	100
	22	G 3/4 A	19.0	18.0	32	33	33.0	25.5	24.0	13	49.0	42	3.5	36	32	36	349	**SWVE22LROMD**	**SWVE22LRKDSOMD**	100
	28	G 1 A	24.0	22.0	39	40	39.5	32.0	30.5	14	66.5	49	3.5	50	46	41		**SWVE28LROMD**	**SWVE28LRKDSOMD**	100
	35	G 1 1/4 A	30.0	29.0	49	50	46.5	36.0	35.5	16	76.0	58	3.5	60	55	50		**SWVE35LROMD**	**SWVE35LRKDSOMD**	100
	42	G 1 1/2 A	36.0	35.0	55	56	51.5	40.5	40.5	18	86.0	63	3.5	70	60	60		**SWVE42LROMD**	**SWVE42LRKDSOMD**	100
S[4]	06	G 1/4 A	4.0	6.5	18	19	22.0	15.0	13.0	9	27.0	30	3.0	19	19	17	69	**SWVE06SROMD**	**SWVE06SRKDSOMD**	160
	08	G 1/4 A	5.0	6.5	18	19	22.0	15.0	13.0	9	27.0	30	3.0	19	19	19	73	**SWVE08SROMD**	**SWVE08SRKDSOMD**	160
	10	G 3/8 A	7.0	8.5	22	22	23.5	16.0	15.0	9	32.0	32	3.0	22	22	22	108	**SWVE10SROMD**	**SWVE10SRKDSOMD**	100
	12	G 3/8 A	8.0	8.0	22	22	24.5	17.0	18.0	9	37.0	33	3.0	24	24	24	147	**SWVE12SROMD**	**SWVE12SRKDSOMD**	100
	16	G 1/2 A	12.0	13.0	26	27	30.0	21.5	21.5	11	44.5	40	4.5	30	27	30	249	**SWVE16SROMD**	**SWVE16SRKDSOMD**	100
	20	G 3/4 A	16.0	18.0	32	33	35.0	24.5	24.0	13	49.0	46	3.5	36	32	36	359	**SWVE20SROMD**	**SWVE20SRKDSOMD**	100
	25	G 1 A	20.0	22.0	39	40	43.5	31.5	30.5	14	66.5	56	3.5	50	46	46		**SWVE25SROMD**	**SWVE25SRKDSOMD**	100
	30	G 1 1/4 A	25.0	29.0	49	50	50.5	37.0	35.5	16	76.0	64	3.5	60	55	50		**SWVE30SROMD**	**SWVE30SRKDSOMD**	100
	38	G 1 1/2 A	32.0	35.0	55	56	57.5	41.5	40.5	18	86.0	72	3.5	70	60	60		**SWVE38SROMD**	**SWVE38SRKDSOMD**	100

[1]) Pressure shown = item deliverable

[2]) LL = very light series; [3]) L = light series; [4]) S = heavy series

$\frac{\text{PN (bar)}}{10}$ = PN (MPa)

Delivery without nut and ring. Information on ordering complete fittings see page I7.

Order code suffixes			
Material	Suffix surface and material	Example	Standard sealing material (no additonal. suffix needed)
Steel, zinc plated, Cr(VI)-free	CF	SWVE16SROMDCF	NBR
Steel, zinc plated, Cr(VI)-free	CF	SWVE16SRKDSOMDCF	NBR

*Please add the **suffixes** below according to the material/surface required.

WE-NPT Male stud elbow

EO 24° cone end / Male NPT thread (SAE J476)

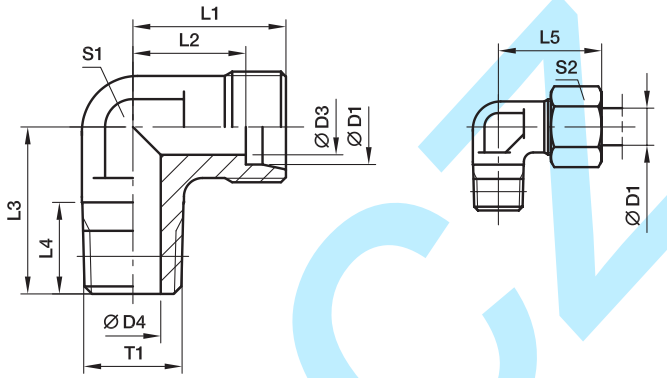

Series	D1	T1	D3	D4	L1	L2	L3	L4	L5	S1	S2	Weight g/1 piece	Order code*	PN (bar)[1] CF	71	MS
LL[2])	04	1/8-27 NPT	3.0	4.0	15	11.0	17	10.0	21	9	10	18	**WE04LL1/8NPT**	100		
	06	1/8-27 NPT	4.5	4.5	15	9.5	17	10.0	21	9	12	17	**WE06LL1/8NPT**	100		
	08	1/8-27 NPT	6.0	5.0	17	11.5	20	10.0	23	12	14	25	**WE08LL1/8NPT**	100		
L[3])	06	1/8-27 NPT	4.0	4.0	19	12.0	20	10.0	27	12	14	29	**WE06L1/8NPT**	315	315	200
	06	1/4-18 NPT	4.0	7.0	21	14.0	26	14.5	29	12	14	44	**WE06L1/4NPT**	315	315	200
	06	3/8-18 NPT	4.0	8.0	25	18.0	28	14.5	33	17	14	55	**WE06L3/8NPT**	315	315	200
	08	1/8-27 NPT	6.0	4.0	21	14.0	26	10.0	29	12	17	48	**WE08L1/8NPT**	315	315	200
	08	1/4-18 NPT	6.0	6.0	21	14.0	26	14.5	29	12	17	47	**WE08L1/4NPT**	315	315	200
	10	1/4-18 NPT	8.0	7.0	22	15.0	27	14.5	30	14	19	61	**WE10L1/4NPT**	315	315	200
	10	3/8-18 NPT	8.0	8.0	24	17.0	28	14.5	32	17	19	92	**WE10L3/8NPT**	315	315	200
	12	1/4-18 NPT	10.0	7.0	24	17.0	28	14.5	32	17	22	82	**WE12L1/4NPT**	315	315	200
	12	3/8-18 NPT	10.0	8.0	24	17.0	28	14.5	32	17	22	92	**WE12L3/8NPT**	315	315	200
	12	1/2-14 NPT	10.0	11.0	28	21.0	34	19.5	36	19	22	90	**WE12L1/2NPT**	315	315	200
	15	1/2-14 NPT	12.0	11.0	28	21.0	34	19.5	36	19	27	89	**WE15L1/2NPT**	315	315	200
	18	1/2-14 NPT	15.0	12.0	31	23.5	36	19.5	40	24	32	150	**WE18L1/2NPT**	315	315	200
	22	3/4-14 NPT	19.0	16.0	35	27.5	42	19.5	44	27	36	176	**WE22L3/4NPT**	160	160	100
	28	1-11.5 NPT	24.0	21.0	38	30.5	48	24.5	47	36	41	314	**WE28L1NPT**	160	160	100
	35	1 1/4-11.5 NPT	30.0	28.0	45	34.5	54	25.0	56	41	50	465	**WE35L11/4NPT**	160	160	100
	42	1 1/2-11.5 NPT	36.0	34.0	51	40.0	61	26.0	63	50	60	849	**WE42L11/2NPT**	160	160	100
S[4])	06	1/4-18 NPT	4.0	4.0	23	16.0	26	14.5	31	12	17	56	**WE06S1/4NPT**	630	630	400
	08	1/4-18 NPT	5.0	5.0	24	17.0	27	14.5	32	14	19	73	**WE08S1/4NPT**	630	630	400
	08	3/8-18 NPT	5.0	8.0	25	18.0	28	14.5	33	17	19	77	**WE08S3/8NPT**	630	630	400
	08	1/2-14 NPT	5.0	10.0	30	23.0	34	19.5	38	19	19	75	**WE08S1/2NPT**	630	630	400
	10	1/4-18 NPT	7.0	5.0	25	17.5	28	14.5	34	17	22	96	**WE10S1/4NPT**	630	630	400
	10	3/8-18 NPT	7.0	7.0	25	17.5	28	14.5	34	17	22	98	**WE10S3/8NPT**	630	630	400
	12	1/4-18 NPT	8.0	5.0	29	21.5	29	14.5	38	17	24	73	**WE12S1/4NPT**	630	630	400
	12	3/8-18 NPT	8.0	8.0	29	22.5	28	14.5	38	17	24	123	**WE12S3/8NPT**	630	630	400
	12	1/2-14 NPT	8.0	10.0	30	22.5	34	19.5	39	19	24	107	**WE12S1/2NPT**	630	630	400
	16	1/2-14 NPT	12.0	12.0	33	24.5	36	19.5	43	24	30	157	**WE16S1/2NPT**	400	400	250
	20	3/4-14 NPT	16.0	16.0	37	26.5	42	19.5	48	27	36	205	**WE20S3/4NPT**	400	400	250
	25	1-11.5 NPT	20.0	20.0	42	30.0	48	24.5	54	36	46	381	**WE25S1NPT**	400	400	250
	30	1 1/4-11.5 NPT	25.0	25.0	49	35.5	54	25.0	62	41	50	598	**WE30S11/4NPT**	400	400	250
	38	1 1/2-11.5 NPT	32.0	32.0	57	41.0	61	26.0	72	50	60	1029	**WE38S11/2NPT**	315	315	200

[1]) Pressure shown = item deliverable

[2]) LL = very light series; [3]) L = light series; [4]) S = heavy series

$\frac{\text{PN (bar)}}{10}$ = PN (MPa)

Delivery without nut and ring. Information on ordering complete fittings see page I7.

*Please add the **suffixes** below according to the material/surface required.

Order code suffixes		
Material	Suffix surface and material	Example
Steel, zinc plated, Cr(VI)-free	CFX	WE16S1/2NPTCFX
Stainless Steel	71X	WE16S1/2NPT71X
Brass	MSX	WE16S1/2NPTMSX

WE-M(KEG) Male stud elbow

EO 24° cone end / Male metric taper thread (DIN 3852-1, type C)

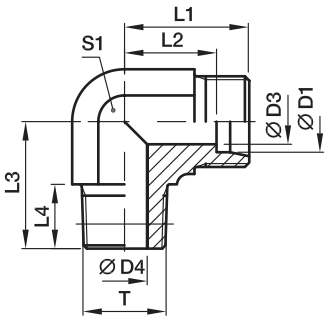

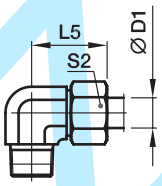

Series	D1	T	D3	D4	L1	L2	L3	L4	L5	S1	S2	Weight g/1 piece	Order code*	PN (bar)[1] CF	71	MS
LL[2])	04	M 08×1.0 tap.	3.0	3.5	15	11.0	17	8	21	9	10	14	**WE04LLM**	100	100	63
	06	M 10×1.0 tap.	4.5	4.5	15	9.5	17	8	21	9	12	17	**WE06LLM**	100	100	63
	08	M 10×1.0 tap.	6.0	6.0	17	11.5	20	8	23	12	14	25	**WE08LLM**	100	100	63
L[3])	06	M 10×1.0 tap.	4.0	4.0	19	12.0	20	8	27	12	14	29	**WE06LM**	315	315	200
	08	M 12×1.5 tap.	6.0	6.0	21	14.0	26	12	29	12	17	46	**WE08LM**	315	315	200
	10	M 14×1.5 tap.	8.0	7.0	22	15.0	27	12	30	14	19	62	**WE10LM**	315	315	200
	12	M 16×1.5 tap.	10.0	9.0	24	17.0	28	12	32	17	22	89	**WE12LM**	315	315	200
	15	M 18×1.5 tap.	12.0	11.0	28	21.0	32	12	36	19	27	78	**WE15LM**	315	315	200
	18	M 22×1.5 tap.	15.0	14.0	31	23.0	36	14	40	24	32	148	**WE18LM**	315	315	200
S[4])	06	M 12×1.5 tap.	4.0	4.0	23	16.0	26	12	31	12	17	53	**WE06SM**	400	400	250
	08	M 14×1.5 tap.	5.0	5.0	24	17.0	27	12	32	14	19	78	**WE08SM**	400	400	250
	10	M 16×1.5 tap.	7.0	7.0	25	17.5	28	12	34	17	22	102	**WE10SM**	400	400	250
	12	M 18×1.5 tap.	8.0	8.0	29	21.5	28	12	38	17	24	134	**WE12SM**	400	400	250
	16	M 22×1.5 tap.	12.0	12.0	33	24.5	32	14	43	24	30	161	**WE16SM**	400	400	250

[1]) Pressure shown = item deliverable

[2]) LL = very light series; [3]) L = light series; [4]) S = heavy series

$\frac{\text{PN (bar)}}{10}$ = PN (MPa)

Delivery without nut and ring. Information on ordering complete fittings see page I7.

Order code suffixes		
Material	Suffix surface and material	Example
Steel, zinc plated, Cr(VI)-free	CFX	WE16SMCFX
Stainless Steel	71X	WE16SM71X
Brass	MSX	WE16SMMSX

*Please add the **suffixes** below according to the material/surface required.

KOVAX.CZ

WE-M Male stud elbow

EO 24° cone end / Male metric thread – metal sealing edge (ISO 9974)

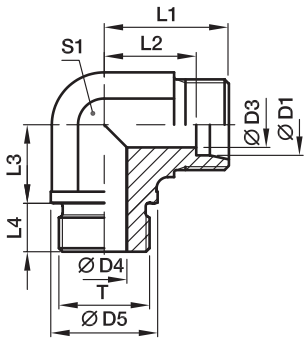

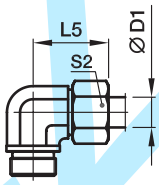

Series	D1	T	D3	D4	D5	L1	L2	L3	L4	L5	S1	S2	Weight g/1 piece	Order code*	PN (bar)[1] CF	71
L[3]	22	M 26×1.5	19	18	31	35	27.5	26	16	44	27	36	173	**WE22LM**	160	160
	28	M 33×2.0	24	23	39	38	30.5	30	18	47	36	41	303	**WE28LM**	160	160
	35	M 42×2.0	30	30	49	45	34.5	34	20	56	41	50	469	**WE35LM**	160	160
	42	M 48×2.0	36	36	55	51	40.0	39	22	63	50	60	661	**WE42LM**	160	160
S[4]	20	M 27×2.0	16	16	32	37	26.5	26	16	48	27	36	208	**WE20SM**	400	400
	25	M 33×2.0	20	20	39	42	30.0	30	18	54	36	46	396	**WE25SM**	250	250
	30	M 42×2.0	25	25	49	49	35.5	34	20	62	41	50	632	**WE30SM**	160	160
	38	M 48×2.0	32	32	55	57	41.0	39	22	72	50	60	907	**WE38SM**	160	160

[1]) Pressure shown = item deliverable

[3]) L = light series; [4]) S = heavy series

$\frac{\text{PN (bar)}}{10}$ = PN (MPa)

Delivery without nut and ring. Information on ordering complete fittings see page I7.

*Please add the **suffixes** below according to the material/surface required.

Order code suffixes		
Material	Suffix surface and material	Example
Steel, zinc plated, Cr(VI)-free	CFX	WE20SMCFX
Stainless Steel	71X	WE20SM71X

WE-R Male stud elbow

EO 24° cone end / Male BSPP thread – metal sealing edge (ISO 1179)

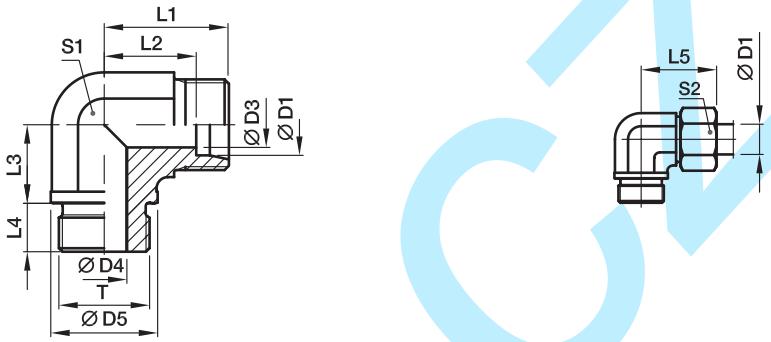

Series	D1	T	D3	D4	D5	L1	L2	L3	L4	L5	S1	S2	Weight g/1 piece	Order code*	PN (bar)[1] CF	71	MS
L[3]	22	G 3/4 A	19	18	32	35	27.5	26	16	44	27	36	168	**WE22LR**	160	160	100
	28	G 1 A	24	23	39	38	30.5	30	18	47	36	41	305	**WE28LR**	160	160	100
	35	G 1 1/4 A	30	30	49	45	34.5	34	20	56	41	50	465	**WE35LR**	160	160	100
	42	G 1 1/2 A	36	36	55	51	40.0	39	22	63	50	60	706	**WE42LR**	160	160	100
S[4]	20	G 3/4 A	16	16	32	37	26.5	26	16	48	27	36	210	**WE20SR**	400	400	250
	25	G 1 A	20	20	39	42	30.0	30	18	54	36	46	388	**WE25SR**	250	250	160
	30	G 1 1/4 A	25	25	49	49	35.5	34	20	62	41	50	630	**WE30SR**	160	160	100
	38	G 1 1/2 A	32	32	55	57	41.0	39	22	72	50	60	888	**WE38SR**	160	160	100

[1]) Pressure shown = item deliverable

[3]) L = light series; [4]) S = heavy series

$\frac{PN\ (bar)}{10}$ = PN (MPa)

Delivery without nut and ring. Information on ordering complete fittings see page I7.

*Please add the **suffixes** below according to the material/surface required.

Order code suffixes		
Material	Suffix surface and material	Example
Steel, zinc plated, Cr(VI)-free	CFX	WE20SRCFX
Stainless Steel	71X	WE20SR71X
Brass	MSX	WE20SRMSX

WE-R (KEG) Male stud elbow

EO 24° cone end / Male short BSP taper thread (DIN 3852-2, type C)

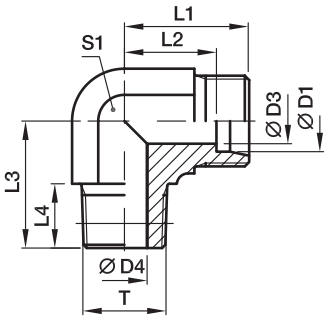

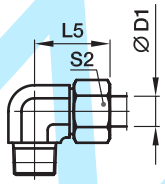

Series	D1	T	D3	D4	L1	L2	L3	L4	L5	S1	S2	Weight g/1 piece	Order code*	PN (bar)[1] CF	71	MS
LL[2])	04	R 1/8 tap.	3.0	4.0	15	11.0	17	8	21	9	10	17	**WE04LLR**	100	100	63
	06	R 1/8 tap.	4.5	4.5	15	9.5	17	8	21	9	12	17	**WE06LLR**	100	100	63
	08	R 1/8 tap.	6.0	6.0	17	11.5	20	8	23	12	14	24	**WE08LLR**	100	100	63
	10	R 1/4 tap.	8.0	7.0	18	12.5	23	12	24	12	17	36	**WE10LLR**	100		
	12	R 1/4 tap.	10.0	7.0	19	13.0	23	12	25	14	19	46	**WE12LLR**	100		
L[3])	06	R 1/8 tap.	4.0	4.0	19	12.0	20	8	27	12	14	30	**WE06LR**	315	315	200
	06	R 1/4 tap.	4.0	6.0	21	14.0	26	12	29	12	14	47	**WE06LR1/4**	315	315	
	08	R 1/4 tap.	6.0	6.0	21	14.0	26	12	29	12	17	46	**WE08LR**	315	315	200
	08	R 1/8 tap.	6.0	4.0	21	14.0	26	8	29	12	17	49	**WE08LR1/8**	315	315	
	08	R 3/8 tap.	6.0	9.0	24	17.0	28	12	32	17	17	94	**WE08LR3/8**	315	315	
	10	R 1/4 tap.	8.0	7.0	22	15.0	27	12	30	14	19	61	**WE10LR**	315	315	200
	10	R 3/8 tap.	8.0	9.0	24	17.0	28	12	32	17	19	87	**WE10LR3/8**	315	315	
	12	R 3/8 tap.	10.0	9.0	24	17.0	28	12	32	17	22	88	**WE12LR**	315	315	200
	12	R 1/4 tap.	10.0	7.0	24	17.0	27	12	32	17	22	80	**WE12LR1/4**	315	315	
	12	R 1/2 tap.	10.0	11.0	28	21.0	34	14	36	19	22	89	**WE12LR1/2**	315	315	
	15	R 1/2 tap.	12.0	11.0	28	21.0	34	14	36	19	27	94	**WE15LR**	315	315	200
	18	R 1/2 tap.	15.0	14.0	31	23.5	36	14	40	24	32	141	**WE18LR**	315	315	200
S[4])	06	R 1/4 tap.	4.0	4.0	23	16.0	26	12	31	12	17	56	**WE06SR**	400	400	250
	06	R 3/8 tap.	4.0	7.0	25	18.0	28	12	33	17	17	61	**WE06SR3/8**	400	400	
	08	R 1/4 tap.	5.0	5.0	24	17.0	27	12	32	14	19	73	**WE08SR**	400	400	250
	08	R 3/8 tap.	5.0	7.0	25	18.0	28	12	33	17	19	63	**WE08SR3/8**	400	400	
	10	R 3/8 tap.	7.0	7.0	25	17.5	28	12	34	17	22	104	**WE10SR**	400	400	250
	10	R 1/4 tap.	7.0	5.0	25	17.5	28	12	34	17	22	59	**WE10SR1/4**	400	400	
	10	R 1/2 tap.	7.0	10.0	30	22.5	32	14	39	19	22	98	**WE10SR1/2**	400	400	
	12	R 3/8 tap.	8.0	8.0	29	21.5	28	12	38	17	24	126	**WE12SR**	400	400	250
	12	R 1/2 tap.	8.0	11.0	30	22.5	32	14	39	19	24	97	**WE12SR1/2**	400	400	
	16	R 1/2 tap.	12.0	12.0	33	24.5	32	14	43	24	30	150	**WE16SR**	400	400	250

[1]) Pressure shown = item deliverable

[2]) LL = very light series; [3]) L = light series; [4]) S = heavy series

$\frac{\text{PN (bar)}}{10}$ = PN (MPa)

Delivery without nut and ring. Information on ordering complete fittings see page I7.

*Please add the **suffixes** below according to the material/surface required.

Order code suffixes		
Material	Suffix surface and material	Example
Steel, zinc plated, Cr(VI)-free	CFX	WE16SRCFX
Stainless Steel	71X	WE16SR71X
Brass	MSX	WE16SRMSX

TE-M Male stud branch tee

EO 24° cone end / Male metric thread – metal sealing edge (ISO 9974)

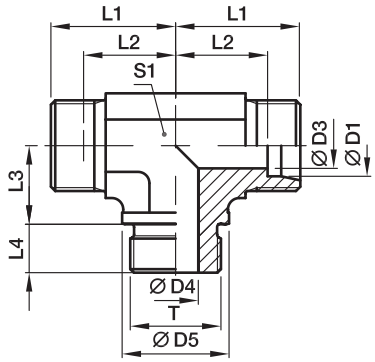

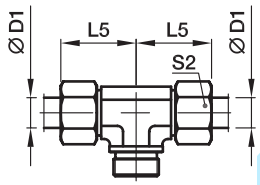

Series	D1	T	D3	D4	D5	L1	L2	L3	L4	L5	S1	S2	Weight g/1 piece	Order code*	PN (bar)[1] CF	71
L[3])	22	M 26×1.5	19	18	31	35	27.5	26	16	44	27	36	208	**TE22LM**	160	160
	28	M 33×2.0	24	23	39	38	30.5	30	18	47	36	41	352	**TE28LM**	160	160
	35	M 42×2.0	30	30	49	45	34.5	34	20	56	41	50	554	**TE35LM**	160	160
	42	M 48×2.0	36	36	55	51	40.0	39	22	63	50	60	847	**TE42LM**	160	160
S[4])	20	M 27×2.0	16	16	32	37	26.5	26	16	48	27	36	265	**TE20SM**	400	400
	25	M 33×2.0	20	20	39	42	30.0	30	18	54	36	46	482	**TE25SM**	250	250
	30	M 42×2.0	25	25	49	49	35.5	34	20	62	41	50	772	**TE30SM**	160	160
	38	M 48×2.0	32	32	55	57	41.0	39	22	72	50	60	1121	**TE38SM**	160	160

[1]) Pressure shown = item deliverable

[3]) L = light series; [4]) S = heavy series

$\frac{\text{PN (bar)}}{10}$ = PN (MPa)

Delivery without nut and ring. Information on ordering complete fittings see page I7.

*Please add the **suffixes** below according to the material/surface required.

Order code suffixes		
Material	Suffix surface and material	Example
Steel, zinc plated, Cr(VI)-free	CFX	TE20SMCFX
Stainless Steel	71X	TE20SM71X

TE-R Male stud branch tee

EO 24° cone end / Male BSPP thread – metal sealing edge (ISO 1179)

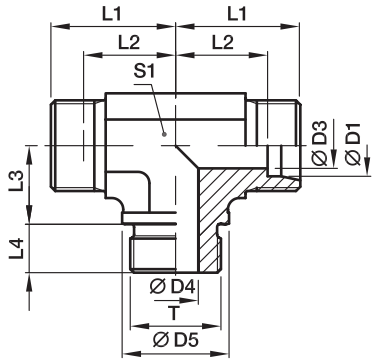

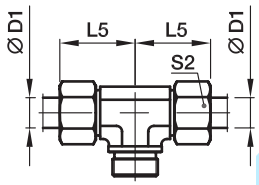

Series	D1	T	D3	D4	D5	L1	L2	L3	L4	L5	S1	S2	Weight g/1 piece	Order code*	PN (bar)[1] CF	71	MS
L[3]	22	G 3/4 A	19	18	32	35	27.5	26	16	44	27	36	208	**TE22LR**	160	160	100
	28	G 1 A	24	23	39	38	30.5	30	18	47	36	41	378	**TE28LR**	160	160	100
	35	G 1 1/4 A	30	30	49	45	34.5	34	20	56	41	50	554	**TE35LR**	160	160	100
	42	G 1 1/2 A	36	36	55	51	40.0	39	22	63	50	60	847	**TE42LR**	160	160	100
S[4]	20	G 3/4 A	16	16	32	37	26.5	26	16	48	27	36	267	**TE20SR**	400	400	250
	25	G 1 A	20	20	39	42	30.0	30	18	54	36	46	485	**TE25SR**	250	250	
	30	G 1 1/4 A	25	25	49	49	35.5	34	20	62	41	50	762	**TE30SR**	160	160	
	38	G 1 1/2 A	32	32	55	57	41.0	39	22	72	50	60	1121	**TE38SR**	160	160	

[1]) Pressure shown = item deliverable

[3]) L = light series; [4]) S = heavy series

$\frac{\text{PN (bar)}}{10}$ = PN (MPa)

Delivery without nut and ring. Information on ordering complete fittings see page I7.

Order code suffixes		
Material	Suffix surface and material	Example
Steel, zinc plated, Cr(VI)-free	CFX	TE20SRCFX
Stainless Steel	71X	TE20SR71X
Brass	MSX	TE20SRMSX

*Please add the **suffixes** below according to the material/surface required.

TE-R (KEG) Male stud branch tee

EO 24° cone end / Male short BSP taper thread (DIN 3852-2, type C)

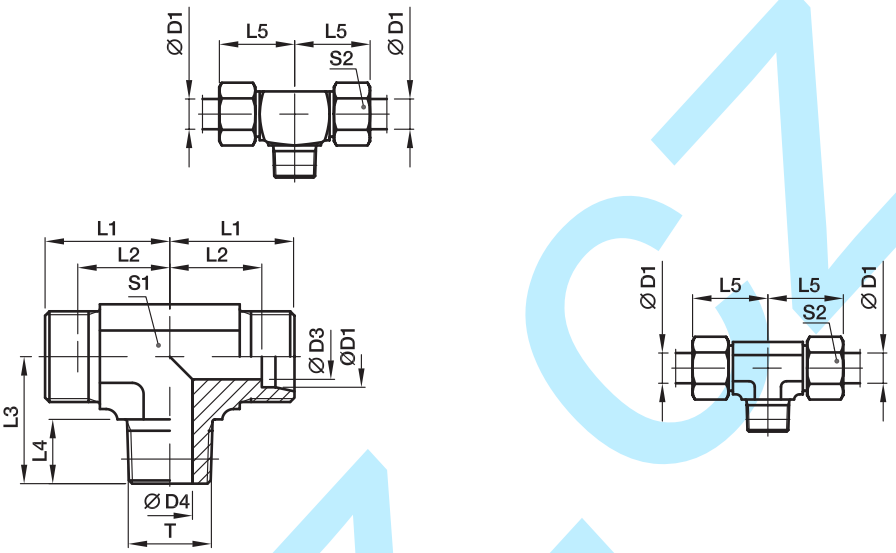

Series	D1	T	D3	D4	L1	L2	L3	L4	L5	S1	S2	Weight g/1 piece	Order code*	PN (bar)[1] CF	71	MS
LL[2])	04	R 1/8 tap.	3.0	4.0	15	11.0	17	8	21	9	10	21	**TE04LLR**	100	100	63
	06	R 1/8 tap.	4.5	4.5	15	9.5	17	8	21	9	12	21	**TE06LLR**	100	100	63
	08	R 1/8 tap.	6.0	6.0	17	11.5	20	8	23	12	14	29	**TE08LLR**	100	100	63
L[3])	06	R 1/8 tap.	4.0	4.0	19	12.0	20	8	27	14	14	38	**TE06LR**	315	315	200
	08	R 1/4 tap.	6.0	6.0	21	14.0	26	12	29	12	17	58	**TE08LR**	315	315	200
	10	R 1/4 tap.	8.0	7.0	22	15.0	27	12	30	14	19	43	**TE10LR**	315	315	200
	12	R 3/8 tap.	10.0	9.0	24	17.0	28	12	32	17	22	61	**TE12LR**	315	315	200
	15	R 1/2 tap.	12.0	11.0	28	21.0	34	14	36	19	27	113	**TE15LR**	315	315	200
	18	R 1/2 tap.	15.0	14.0	31	23.5	36	14	40	24	32	149	**TE18LR**	315	315	200
S[4])	06	R 1/4 tap.	4.0	4.0	23	16.0	26	12	31	12	17	73	**TE06SR**	400	400	250
	08	R 1/4 tap.	5.0	5.0	24	17.0	27	12	32	14	19	61	**TE08SR**	400	400	250
	10	R 3/8 tap.	7.0	7.0	25	17.5	28	12	34	17	22	82	**TE10SR**	400	400	250
	12	R 3/8 tap.	8.0	8.0	29	21.5	28	12	38	19*	24	105	**TE12SR**	400	400	250
	16	R 1/2 tap.	12.0	12.0	33	24.5	32	14	43	24	30	175	**TE16SR**	400	400	250

[1]) Pressure shown = item deliverable

[2]) LL = very light series; [3]) L = light series; [4]) S = heavy series

*S1 = 17 in 1.4571

$\frac{\text{PN (bar)}}{10}$ = PN (MPa)

Delivery without nut and ring. Information on ordering complete fittings see page I7.

Order code suffixes		
Material	Suffix surface and material	Example
Steel, zinc plated, Cr(VI)-free	CFX	TE16SRCFX
Stainless Steel	71X	TE16SR71X
Brass	MSX	TE16SRMSX

*Please add the **suffixes** below according to the material/surface required.

TE-M(KEG) Male stud branch tee

EO 24° cone end / Male short metric taper thread (DIN 3852-1, type C)

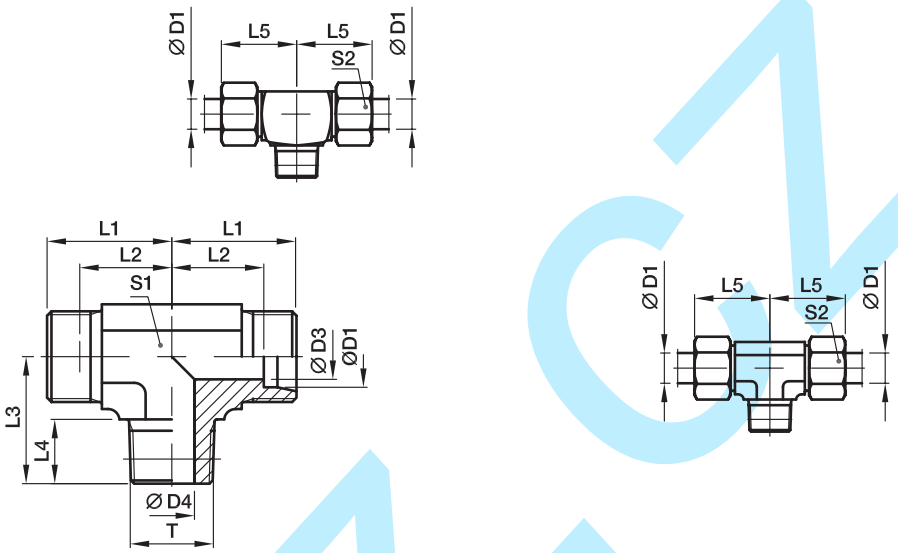

Series	D1	T	D3	D4	L1	L2	L3	L4	L5	S1	S2	Weight g/1 piece	Order code*	PN (bar)[1] CF	PN (bar)[1] 71
LL[2])	04	M 08×1.0 tap.	3.0	3.5	15	11.0	17	8	21	9	10	17	**TE04LLM**	100	100
	06	M 10×1.0 tap.	4.5	4.5	15	9.5	17	8	21	9	12	20	**TE06LLM**	100	100
	08	M 10×1.0 tap.	6.0	6.0	17	11.5	20	8	23	12	14	29	**TE08LLM**	100	100
L[3])	06	M 10×1.0 tap.	4.0	4.0	19	12.0	20	8	27	12	14	38	**TE06LM**	315	315
	08	M 12×1.5 tap.	6.0	6.0	21	14.0	26	12	29	12	17	54	**TE08LM**	315	315
	10	M 14×1.5 tap.	8.0	7.0	22	15.0	27	12	30	14	19	45	**TE10LM**	315	315
	12	M 16×1.5 tap.	10.0	9.0	24	17.0	28	12	32	17	22	60	**TE12LM**	315	315
	15	M 18×1.5 tap.	12.0	11.0	28	21.0	32	12	36	19	27	100	**TE15LM**	315	315
	18	M 22×1.5 tap.	15.0	14.0	31	23.5	36	14	40	24	32	149	**TE18LM**	315	315
S[4])	06	M 12×1.5 tap.	4.0	4.0	23	16.0	26	12	31	12	17	69	**TE06SM**	400	400
	08	M 14×1.5 tap.	5.0	5.0	24	17.0	27	12	32	14	19	98	**TE08SM**	400	400
	10	M 16×1.5 tap.	7.0	7.0	25	17.5	28	12	34	17	22	82	**TE10SM**	400	400
	12	M 18×1.5 tap.	8.0	8.0	29	21.5	28	12	38	19*	24	106	**TE12SM**	400	400
	16	M 22×1.5 tap.	12.0	12.0	33	24.5	32	14	43	24	30	177	**TE16SM**	400	400

[1]) Pressure shown = item deliverable

[2]) LL = very light series; [3]) L = light series; [4]) S = heavy series

*S1 = 17 in 1.4571

$\frac{\text{PN (bar)}}{10}$ = PN (MPa)

Delivery without nut and ring. Information on ordering complete fittings see page I7.

*Please add the **suffixes** below according to the material/surface required.

Order code suffixes		
Material	Suffix surface and material	Example
Steel, zinc plated, Cr(VI)-free	CFX	TE16SMCFX
Stainless Steel	71X	TE16SM71X

LE-M Male stud run tee

EO 24° cone end / Male metric thread – metal sealing edge (ISO 9974)

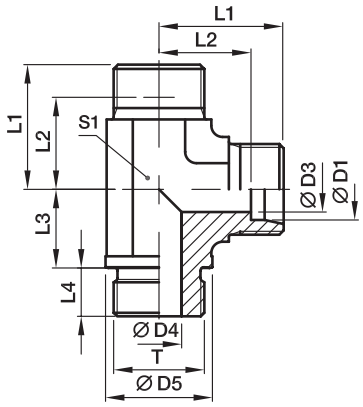

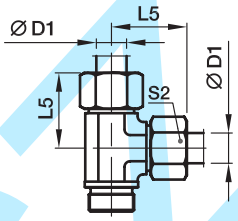

Series	D1	T	D3	D4	D5	L1	L2	L3	L4	L5	S1	S2	Weight g/1 piece	Order code*	PN (bar)[1] CF	71
L[3])	22	M 26×1.5	19	18	31	35	27.5	26	16	44	27	36	225	**LE22LM**	160	160
	28	M 33×2.0	24	23	39	38	30.5	30	18	47	36	41	382	**LE28LM**	160	160
	35	M 42×2.0	30	30	49	45	34.5	34	20	56	41	50	583	**LE35LM**	160	160
	42	M 48×2.0	36	36	55	51	40.0	39	22	63	50	60	821	**LE42LM**	160	160
S[4])	20	M 27×2.0	16	16	32	37	26.5	26	16	48	27	36	264	**LE20SM**	400	400
	25	M 33×2.0	20	20	39	42	30.0	30	18	54	36	46	497	**LE25SM**	250	250
	30	M 42×2.0	25	25	49	49	35.5	34	20	62	41	50	744	**LE30SM**	160	160
	38	M 48×2.0	32	32	55	57	41.0	39	22	72	50	60	1111	**LE38SM**	160	160

[1]) Pressure shown = item deliverable

[3]) L = light series; [4]) S = heavy series

$\frac{\text{PN (bar)}}{10}$ = PN (MPa)

Delivery without nut and ring. Information on ordering complete fittings see page I7.

*Please add the **suffixes** below according to the material/surface required.

Order code suffixes		
Material	Suffix surface and material	Example
Steel, zinc plated, Cr(VI)-free	CFX	LE20SMCFX
Stainless Steel	71X	LE20SM71X

kovaz.cz

LE-R Male stud run tee

EO 24° cone end / Male BSPP thread – metal sealing edge (ISO 1179)

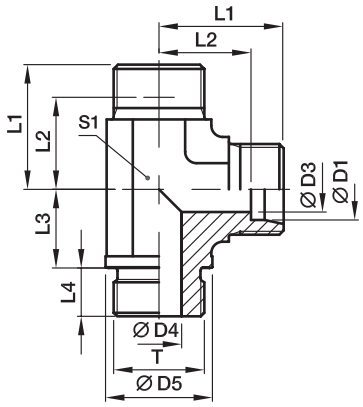

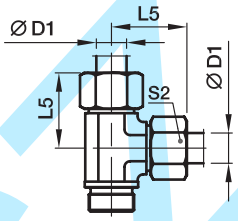

Series	D1	T	D3	D4	D5	L1	L2	L3	L4	L5	S1	S2	Weight g/1 piece	Order code*	PN (bar)[1] CF	PN (bar)[1] 71
L[3]	22	G 3/4 A	19	18	32	35	27.5	26	16	44	27	36	225	**LE22LR**	160	160
	28	G 1 A	24	23	39	38	30.5	30	18	47	36	41	358	**LE28LR**	160	160
	35	G 1 1/4 A	30	30	49	45	34.5	34	20	56	41	50	583	**LE35LR**	160	160
	42	G 1 1/2 A	36	36	55	51	40.0	39	22	63	50	60	821	**LE42LR**	160	160
S[4]	20	G 3/4 A	16	16	32	37	26.5	26	16	48	27	36	259	**LE20SR**	400	400
	25	G 1 A	20	20	39	42	30.0	30	18	54	36	46	495	**LE25SR**	250	250
	30	G 1 1/4 A	25	25	49	49	35.5	34	20	62	41	50	744	**LE30SR**	160	160
	38	G 1 1/2 A	32	32	55	57	41.0	39	22	72	50	60	1111	**LE38SR**	160	160

[1]) Pressure shown = item deliverable

[3]) L = light series; [4]) S = heavy series

$\frac{\text{PN (bar)}}{10}$ = PN (MPa)

Delivery without nut and ring. Information on ordering complete fittings see page I7.

*Please add the **suffixes** below according to the material/surface required.

Order code suffixes		
Material	Suffix surface and material	Example
Steel, zinc plated, Cr(VI)-free	CFX	LE20SRCFX
Stainless Steel	71X	LE20SR71X

kovaz.cz

LE-R (KEG) Male stud run tee

EO 24° cone end / Male short BSP taper thread (DIN 3852-2, type C)

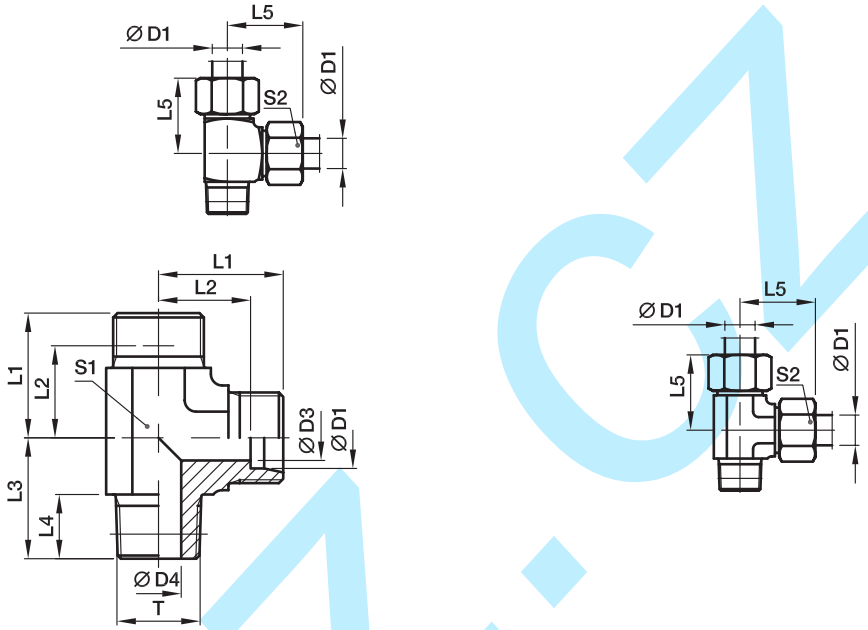

Series	D1	T	D3	D4	L1	L2	L3	L4	L5	S1	S2	Weight g/1 piece	Order code*	PN (bar)[1] CF	PN (bar)[1] 71
LL[2])	04	R 1/8 tap.	3.0	4.0	15	11.0	17	8	21	9	10	20	**LE04LLR**	100	100
	06	R 1/8 tap.	4.5	4.5	15	9.5	17	8	21	9	12	21	**LE06LLR**	100	100
	08	R 1/8 tap.	6.0	6.0	17	11.5	20	8	23	12	14	28	**LE08LLR**	100	100
L[3])	06	R 1/8 tap.	4.0	4.0	19	12.0	20	8	27	12	14	40	**LE06LR**	315	315
	08	R 1/4 tap.	6.0	6.0	21	14.0	26	12	29	12	17	57	**LE08LR**	315	315
	10	R 1/4 tap.	8.0	7.0	22	15.0	27	12	30	14	19	50	**LE10LR**	315	315
	12	R 3/8 tap.	10.0	9.0	24	17.0	28	12	32	17	22	60	**LE12LR**	315	315
	15	R 1/2 tap.	12.0	11.0	28	21.0	34	14	36	19	27	115	**LE15LR**	315	315
	18	R 1/2 tap.	15.0	14.0	31	23.5	36	14	40	24	32	145	**LE18LR**	315	315
S[4])	06	R 1/4 tap.	4.0	4.0	23	16.0	26	12	31	12	17	71	**LE06SR**	400	400
	08	R 1/4 tap.	5.0	5.0	24	17.0	27	12	32	14	19	62	**LE08SR**	400	400
	10	R 3/8 tap.	7.0	7.0	25	17.5	28	12	34	17	22	82	**LE10SR**	400	400
	12	R 3/8 tap.	8.0	8.0	29	21.5	28	12	38	19*	24	102	**LE12SR**	400	400
	16	R 1/2 tap.	12.0	12.0	33	24.5	32	14	43	24	30	193	**LE16SR**	400	400

[1]) Pressure shown = item deliverable

[2]) LL = very light series; [3]) L = light series; [4]) S = heavy series

*S1 = 17 in 1.4571

$\frac{\text{PN (bar)}}{10}$ = PN (MPa)

Delivery without nut and ring. Information on ordering complete fittings see page I7.

*Please add the **suffixes** below according to the material/surface required.

Order code suffixes		
Material	Suffix surface and material	Example
Steel, zinc plated, Cr(VI)-free	CFX	LE16SRCFX
Stainless Steel	71X	LE16SR71X

LE-M(KEG) Male stud run tee

EO 24° cone end / Male short metric taper thread (DIN 3852-1, Form C)

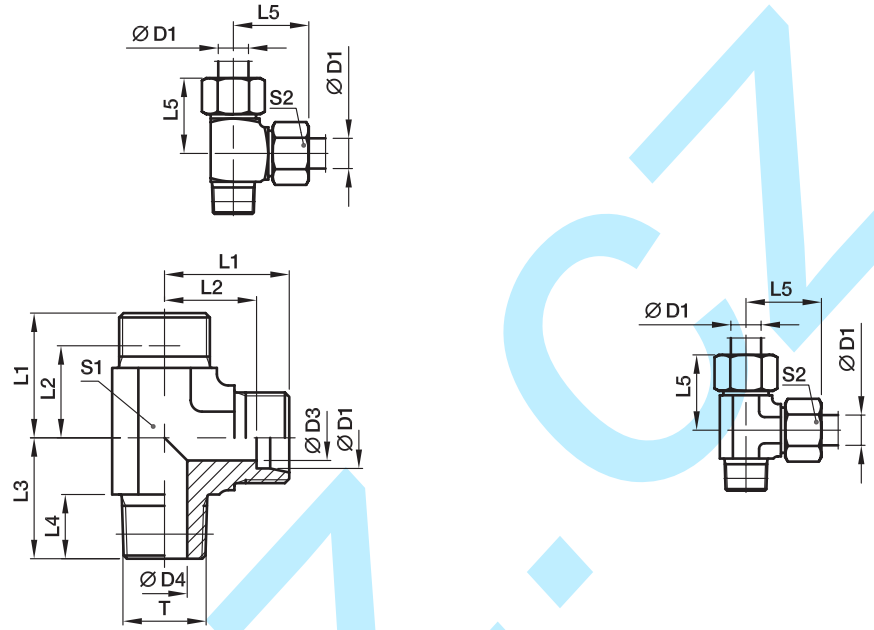

Series	D1	T	D3	D4	L1	L2	L3	L4	L5	S1	S2	Weight g/1 piece	Order code*	PN (bar)[1] CF	PN (bar)[1] 71
LL[2])	04	M 08×1.0 tap.	3.0	3.5	15	11.0	17	8	21	9	10	17	**LE04LLM**	100	100
	06	M 10×1.0 tap.	4.5	4.5	15	9.5	17	8	21	9	12	21	**LE06LLM**	100	100
	08	M 10×1.0 tap.	6.0	6.0	17	11.5	20	8	23	12	14	29	**LE08LLM**	100	100
L[3])	06	M 10×1.0 tap.	4.0	4.0	19	12.0	20	8	27	12	14	38	**LE06LM**	315	315
	08	M 12×1.5 tap.	6.0	6.0	21	14.0	26	12	29	12	17	56	**LE08LM**	315	315
	10	M 14×1.5 tap.	8.0	7.0	22	15.0	27	12	30	14	19	47	**LE10LM**	315	315
	12	M 16×1.5 tap.	10.0	9.0	24	17.0	28	12	32	17	22	58	**LE12LM**	315	315
	15	M 18×1.5 tap.	12.0	11.0	28	21.0	32	12	36	19	27	98	**LE15LM**	315	315
	18	M 22×1.5 tap.	15.0	14.0	31	23.5	36	14	40	24	32	156	**LE18LM**	315	315
S[4])	06	M 12×1.5 tap.	4.0	4.0	23	16.0	26	12	31	12	17	70	**LE06SM**	400	400
	08	M 14×1.5 tap.	5.0	5.0	24	17.0	27	12	32	14	19	66	**LE08SM**	400	400
	10	M 16×1.5 tap.	7.0	7.0	25	17.5	28	12	34	17	22	123	**LE10SM**	400	400
	12	M 18×1.5 tap.	8.0	8.0	29	21.5	28	12	38	19*	24	169	**LE12SM**	400	400
	16	M 22×1.5 tap.	12.0	12.0	33	24.5	32	14	43	24	30	178	**LE16SM**	400	400

[1]) Pressure shown = item deliverable

[2]) LL = very light series; [3]) L = light series; [4]) S = heavy series

*S1 = 17 in 1.4571

$\frac{PN\ (bar)}{10}$ = PN (MPa)

Delivery without nut and ring. Information on ordering complete fittings see page I7.

*Please add the **suffixes** below according to the material/surface required.

Order code suffixes		
Material	Suffix surface and material	Example
Steel, zinc plated, Cr(VI)-free	CFX	LE16SMCFX
Stainless Steel	71X	LE16SM71X

GAI-M Female connector

Female metric thread (ISO 9974-1) / EO 24° cone end

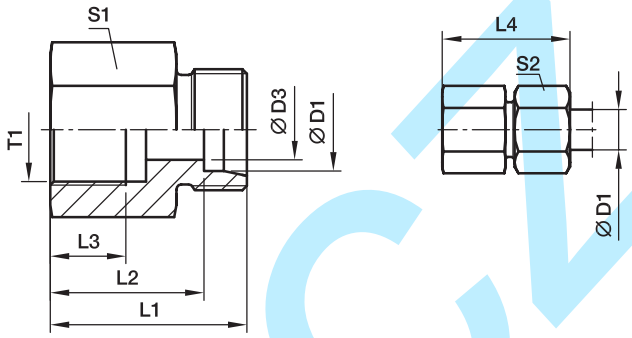

Series	D1	T1	D3	L1	L2	L3	L4	S1	S2	Weight g/1 piece	Order code*	PN (bar)[1] CF	PN (bar)[1] 71
L[3])	06	M 10×1.0	4	26.5	19.5	8.0	34	14	14	18	**GAI06LM**	315	315
	08	M 12×1.5	6	31.0	24.0	12.0	39	17	17	32	**GAI08LM**	315	315
	10	M 14×1.5	8	32.0	25.0	12.0	40	19	19	39	**GAI10LM**	315	315
	12	M 16×1.5	10	33.0	26.0	12.0	41	22	22	52	**GAI12LM**	315	315
	15	M 18×1.5	12	35.0	28.0	12.0	43	24	27	68	**GAI15LM**	315	315
	18	M 22×1.5	15	37.0	29.5	14.0	46	30	32	111	**GAI18LM**	315	315
	22	M 26×1.5	19	42.0	34.5	16.0	51	32	36	123	**GAI22LM**	160	160
	28	M 33×2.0	24	45.0	37.5	18.0	54	41	41	211	**GAI28LM**	160	160
	35	M 42×2.0	30	51.0	40.5	20.0	62	55	50	459	**GAI35LM**	160	160
	42	M 48×2.0	36	53.0	42.0	22.0	65	60	60	522	**GAI42LM**	160	160
S[4])	06	M 12×1.5	4	33.0	26.0	12.0	41	17	17	35	**GAI06SM**	400	400
	08	M 14×1.5	5	33.0	26.0	12.0	41	17	19	42	**GAI08SM**	400	400
	10	M 16×1.5	7	34.0	26.5	12.0	43	22	22	58	**GAI10SM**	400	400
	12	M 18×1.5	8	35.0	27.5	12.0	44	24	24	70	**GAI12SM**	400	400
	16	M 22×1.5	12	39.0	30.5	14.0	49	30	30	114	**GAI16SM**	400	400
	20	M 27×2.0	16	45.0	34.5	16.0	56	36	36	189	**GAI20SM**	315	315
	25	M 33×2.0	20	49.0	37.0	18.0	61	41	46	235	**GAI25SM**	315	315
	30	M 42×2.0	25	55.0	41.5	20.0	68	55	50	490	**GAI30SM**	315	315
	38	M 48×2.0	32	59.0	43.0	22.0	74	60	60	597	**GAI38SM**	250	250

[1]) Pressure shown = item deliverable

[3]) L = light series; [4]) S = heavy series

$\frac{\text{PN (bar)}}{10}$ = PN (MPa)

Delivery without nut and ring. Information on ordering complete fittings see page I7.

*Please add the **suffixes** below according to the material/surface required.

Order code suffixes		
Material	Suffix surface and material	Example
Steel, zinc plated, Cr(VI)-free	CFX	GAI16SMCFX
Stainless Steel	71X	GAI16SM71X

GAI-R Female connector

Female BSPP thread (ISO 1179-1) / EO 24° cone end

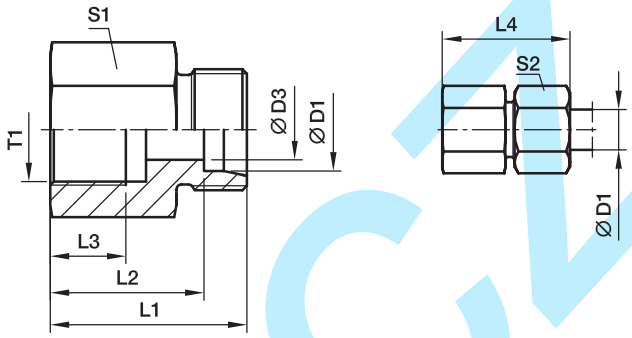

Series	D1	T1	D3	L1	L2	L3	L4	S1	S2	Weight g/1 piece	Order code*	PN (bar)[1] CF	71	MS
L[3])	06	G 1/8	4	26.0	19.0	8.0	34	14	14	18	**GAI06LR**	315	315	200
	06	G 1/4	4	31.0	24.0	12.0	39	19	14	39	**GAI06LR1/4**	315	315	200
	08	G 1/4	6	31.0	24.0	12.0	39	19	17	39	**GAI08LR**	315	315	200
	08	G 3/8	6	32.0	25.0	12.0	40	24	17	61	**GAI08LR3/8**	315	315	200
	08	G 1/2	6	36.0	29.0	14.0	44	27	17	80	**GAI08LR1/2**	315	315	200
	10	G 1/4	8	32.0	25.0	12.0	40	19	19	40	**GAI10LR**	315	315	200
	10	G 3/8	8	33.0	26.0	12.0	41	24	19	63	**GAI10LR3/8**	315	315	200
	10	G 1/2	8	37.0	30.0	14.0	45	27	19	81	**GAI10LR1/2**	315	315	200
	12	G 3/8	10	33.0	26.0	12.0	41	24	22	64	**GAI12LR**	315	315	200
	12	G 1/2	10	37.0	30.0	14.0	45	27	22	83	**GAI12LR1/2**	315	315	200
	15	G 1/2	12	38.0	31.0	14.0	46	27	27	87	**GAI15LR**	315	315	200
	18	G 1/2	15	38.0	30.5	14.0	47	27	32	89	**GAI18LR**	315	315	200
	18	G 3/8	15	34.0	26.5	12.0	43	27	32	95	**GAI18LR3/8**	315	315	200
	22	G 3/4	19	43.0	35.5	16.0	52	36	36	173	**GAI22LR**	160	160	100
	28	G 1	24	45.5	38.0	18.0	55	41	41	211	**GAI28LR**	160	160	100
	35	G 1 1/4	30	51.5	41.0	20.0	63	55	50	469	**GAI35LR**	160	160	100
	42	G 1 1/2	36	53.5	42.5	22.0	65	60	60	540	**GAI42LR**	160	160	100
S[4])	06	G 1/4	4	33.0	26.0	12.0	41	19	17	43	**GAI06SR**	400	400	
	08	G 1/4	5	33.0	26.0	12.0	41	19	19	47	**GAI08SR**	400	400	
	10	G 3/8	7	34.0	26.5	12.0	43	24	22	68	**GAI10SR**	400	400	
	12	G 3/8	8	34.0	26.5	12.0	43	24	24	71	**GAI12SR**	400	400	
	12	G 1/2	8	38.0	30.5	14.0	47	30	24	121	**GAI12SR1/2**	400	400	
	16	G 1/2	12	40.0	31.5	14.0	50	30	30	126	**GAI16SR**	400	400	
	20	G 3/4	16	45.0	34.5	16.0	56	36	36	196	**GAI20SR**	315	315	
	25	G 1	20	49.5	37.5	18.0	62	41	46	246	**GAI25SR**	315	315	
	30	G 1 1/4	25	55.5	42.0	22.0	69	55	50	537	**GAI30SR**	315	315	
	38	G 1 1/2	32	59.5	43.5	22.0	74	60	60	649	**GAI38SR**	250	250	

[1]) Pressure shown = item deliverable

[3]) L = light series; [4]) S = heavy series

$\frac{\text{PN (bar)}}{10}$ = PN (MPa)

Delivery without nut and ring. Information on ordering complete fittings see page I7.

*Please add the **suffixes** below according to the material/surface required.

Order code suffixes		
Material	Suffix surface and material	Example
Steel, zinc plated, Cr(VI)-free	CFX	GAI16SRCFX
Stainless Steel	71X	GAI16SR71X
Brass	MSX	GAI16SRMSX

GAI-NPT Female connector

Female NPT thread (SAE 476) / EO 24° cone end

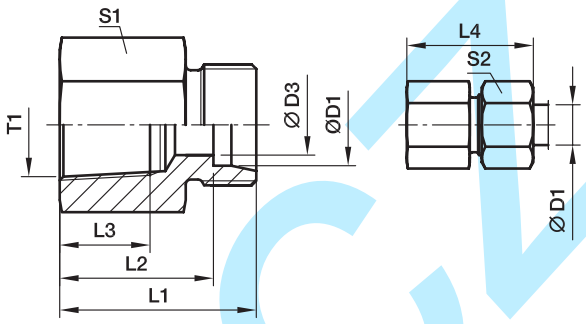

Series	D1	T1	D3	L1	L2	L3	L4	S1	S2	Weight g/1 piece	Order code*	PN (bar)[1] CF	PN (bar)[1] 71
L[3])	06	1/8-27 NPT	4	26.0	19.0	11.6	34	14	14	19	**GAI06L1/8NPT**	315	315
	06	1/4-18 NPT	4	30.5	23.5	16.4	38	19	14	38	**GAI06L1/4NPT**	315	315
	08	1/4-18 NPT	6	30.5	23.5	16.4	38	19	17	39	**GAI08L1/4NPT**	315	315
	10	1/4-18 NPT	8	31.0	24.0	16.4	39	19	19	40	**GAI10L1/4NPT**	315	315
	12	3/8-18 NPT	10	34.0	27.0	17.4	42	24	22	69	**GAI12L3/8NPT**	315	315
	12	1/2-14 NPT	10	39.0	32.0	22.6	47	27	22	91	**GAI12L1/2NPT**	315	315
	15	1/2-14 NPT	12	40.0	33.0	22.6	48	27	27	96	**GAI15L1/2NPT**	315	315
	18	1/2-14 NPT	15	40.0	32.5	22.6	49	27	32	99	**GAI18L1/2NPT**	315	315
	22	3/4-14 NPT	19	43.0	35.5	23.1	52	36	36	184	**GAI22L3/4NPT**	160	160
	28	1-11.5 NPT	24	48.0	40.5	27.8	57	41	41	238	**GAI28L1NPT**	160	160
	35	1 1/4-11.5 NPT	30	51.0	40.5	28.3	62	55	50	424	**GAI35L11/4NPT**	160	160
	42	1 1/2-11.5 NPT	36	53.0	42.0	28.3	65	60	60	547	**GAI42L11/2NPT**	160	160
S[4])	06	1/8-27 NPT	4	29.0	22.0	11.6	36	14	17	25	**GAI06S1/8NPT**	400	400
	06	1/4-18 NPT	4	33.0	26.0	16.4	41	19	17	41	**GAI06S1/4NPT**	400	400
	08	1/4-18 NPT	5	33.0	26.0	16.4	41	19	19	42	**GAI08S1/4NPT**	400	400
	10	3/8-18 NPT	7	35.0	27.0	17.4	44	24	22	74	**GAI10S3/8NPT**	400	400
	12	1/4-18 NPT	8	32.5	25.0	16.4	41	22	24	81	**GAI12S1/4NPT**	400	400
	12	3/8-18 NPT	8	35.0	27.5	17.4	44	24	24	76	**GAI12S3/8NPT**	400	400
	12	1/2-14 NPT	8	41.0	33.5	22.6	50	27	24	101	**GAI12S1/2NPT**	400	400
	16	1/2-14 NPT	12	43.0	34.5	22.6	50	27	30	111	**GAI16S1/2NPT**	400	400
	20	1/2-14 NPT	16	44.0	33.5	22.6	55	32	36	129	**GAI20S1/2NPT**	315	315
	20	3/4-14 NPT	16	46.0	35.5	23.1	57	36	36	214	**GAI20S3/4NPT**	315	315
	25	1-11.5 NPT	20	53.0	41.0	27.8	65	41	46	288	**GAI25S1NPT**	315	315
	30	1 1/4-11.5 NPT	25	57.0	43.5	28.3	70	55	50	559	**GAI30S11/4NPT**	315	315
	38	1 1/2-11.5 NPT	32	59.0	43.0	28.3	74	60	60	632	**GAI38S11/2NPT**	250	250

[1]) Pressure shown = item deliverable

[3]) L = light series; [4]) S = heavy series

$\frac{\text{PN (bar)}}{10}$ = PN (MPa)

Delivery without nut and ring. Information on ordering complete fittings see page I7.

*Please add the **suffixes** below according to the material/surface required.

Order code suffixes		
Material	Suffix surface and material	Example
Steel, zinc plated, Cr(VI)-free	CFX	GAI16S1/2NPTCFX
Stainless Steel	71X	GAI16S1/2NPT71X

RI-ED Thread reducer/expander

Male BSPP thread – ED-seal (ISO 1179) / Female BSPP thread (ISO 1179-1)

Fig. A

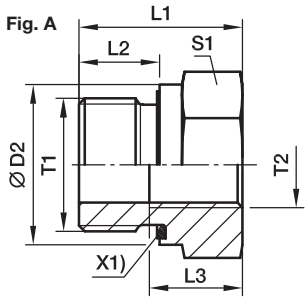

Fig. B

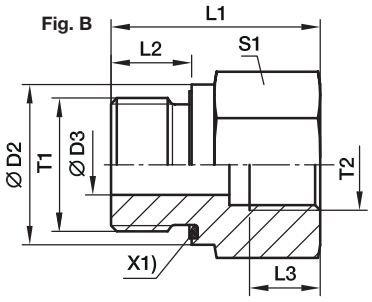

X1) Eolastic-sealing ED

Male Stud T1	Female Stud T2	D2	D3	L1	L2	L3	S1	Fig.	Weight g/1 piece	Order code*	PN (bar)[1] CF	PN (bar)[1] 71
G 1/8 A	G 1/4	14	4	31.0	8	12.0	19	B	41	**RI1/8EDX1/4**	400	400
G 1/8 A	G 3/8	14	4	32.0	8	12.0	24	B	63	**RI1/8EDX3/8**	400	400
G 1/4 A	G 1/8	19	5	29.0	12	8.0	19	B	41	**RI1/4EDX1/8**	400	400
G 1/4 A	G 3/8	19	5	36.0	12	12.0	24	B	69	**RI1/4EDX3/8**	400	400
G 1/4 A	G 1/2	19	5	40.0	12	14.0	30	B	120	**RI1/4EDX1/2**	400	400
G 1/4 A	G 3/4	19	5	43.0	12	16.0	36	B	171	**RI1/4EDX3/4**	400	400
G 3/8 A	G 1/8	22		22.5	12	8.0	22	A	38	**RI3/8EDX1/8**	400	400
G 3/8 A	G 1/4	22	8	36.0	12	12.0	22	B	68	**RI3/8EDX1/4**	400	400
G 3/8 A	G 1/2	22	8	41.0	12	14.0	30	B	124	**RI3/8EDX1/2**	400	400
G 3/8 A	G 3/4	22	8	44.0	12	16.0	36	B	182	**RI3/8EDX3/4**	315	315
G 1/2 A	G 1/8	27		24.0	14	8.0	27	A	65	**RI1/2EDX1/8**	400	400
G 1/2 A	G 1/4	27		24.0	14	12.0	27	A	56	**RI1/2EDX1/4**	400	400
G 1/2 A	G 3/8	27	12	37.0	14	12.0	27	B	95	**RI1/2EDX3/8**	400	400
G 1/2 A	G 3/4	27	12	46.0	14	16.0	36	B	183	**RI1/2EDX3/4**	315	315
G 1/2 A	G 1	27	12	49.0	14	18.0	41	B	232	**RI1/2EDX1**	315	315
G 1/2 A	G 1 1/4	27	10	53.0	14	20.0	55	B	481	**RI1/2EDX11/4**	315	315
G 3/4 A	G 1/4	32		26.0	16	12.0	32	A	103	**RI3/4EDX1/4**	315	315
G 3/4 A	G 3/8	32		26.0	16	12.0	32	A	86	**RI3/4EDX3/8**	315	315
G 3/4 A	G 1/2	32	16	43.0	16	14.0	32	B	156	**RI3/4EDX1/2**	315	315
G 3/4 A	G 1	32	16	51.0	16	18.0	41	B	237	**RI3/4EDX1**	315	315
G 3/4 A	G 1 1/4	32	16	55.0	16	20.0	55	B	486	**RI3/4EDX11/4**	315	315
G 3/4 A	G 1 1/2	32	16	57.0	16	22.0	60	B	561	**RI3/4EDX11/2**	250	250
G 1 A	G 1/4	40		29.0	18	12.0	41	A	197	**RI1EDX1/4**	315	315
G 1 A	G 3/8	40		29.0	18	12.0	41	A	179	**RI1EDX3/8**	315	315
G 1 A	G 1/2	40		29.0	18	14.0	41	A	153	**RI1EDX1/2**	315	315
G 1 A	G 3/4	40	20	49.0	18	16.0	41	B	290	**RI1EDX3/4**	315	315
G 1 A	G 1 1/4	40	20	57.0	18	20.0	55	B	503	**RI1EDX11/4**	315	315
G 1 A	G 1 1/2	40	20	59.0	18	22.0	60	B	585	**RI1EDX11/2**	250	250
G 1 1/4 A	G 1/2	50		32.0	20	14.0	50	A	313	**RI11/4EDX1/2**	315	315
G 1 1/4 A	G 3/4	50		32.0	20	16.0	50	A	393	**RI11/4EDX3/4**	315	315
G 1 1/4 A	G 1	50	25	52.0	20	18.0	50	B	469	**RI11/4EDX1**	315	315
G 1 1/4 A	G 1 1/2	50	25	60.0	20	22.0	60	B	624	**RI11/4EDX11/2**	250	250
G 1 1/2 A	G 1/2	55		36.0	22	14.0	55	A	470	**RI11/2EDX1/2**	250	250
G 1 1/2 A	G 3/4	55		36.0	22	16.0	55	A	415	**RI11/2EDX3/4**	250	250
G 1 1/2 A	G 1	55		36.0	22	18.0	55	A	338	**RI11/2EDX1**	250	250
G 1 1/2 A	G 1 1/4	55	32	58.0	22	20.0	55	B	542	**RI11/2EDX11/4**	250	250
G 2 A	G 1 1/2	75	40	65.0	24	22.0	75	B	1309	**RI2EDX11/2**	160	

[1]) Pressure shown = item deliverable

$\frac{PN\ (bar)}{10} = PN\ (MPa)$

Information on ordering alternative sealing materials see page I7.

*Please add the **suffixes** below according to the material/surface required.

Order code suffixes			
Material	Suffix surface and material	Example	Standard sealing material (no additonal. suffix needed)
Steel, zinc plated, Cr(VI)-free	CF	RI1EDX1/2CF	NBR
Stainless Steel	71	RI1EDX1/271	VIT

RI Thread reducer/expander

Male BSPP thread – metal sealing edge (ISO 1179) / Female BSPP thread (ISO 1179-1)

Fig. A

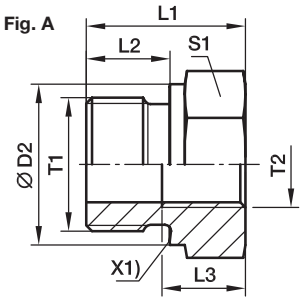

Fig. B

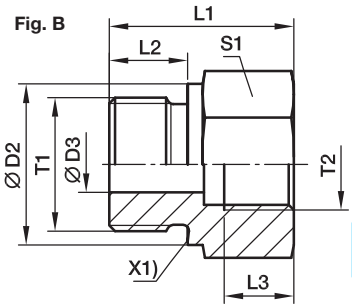

X1) metal sealing edge

Male Stud T1	Female Stud T2	D2	D3	L1	L2	L3	S1	Fig.	Weight g/1 piece	Order code*	PN (bar)[1] CF	71	MS
G 1/8 A	G 1/4	14	4	31.0	8	12.0	19	B	42	**RI1/8X1/4**	400	400	250
G 1/8 A	G 3/8	14	4	32.0	8	12.0	24	B	63	**RI1/8X3/8**	400	400	250
G 1/4 A	G 1/8	18	5	28.0	12	8.0	19	B	38	**RI1/4X1/8**	400	400	250
G 1/4 A	G 3/8	18	5	36.0	12	12.0	24	B	69	**RI1/4X3/8**	400	400	250
G 1/4A	G 1/2	18	5	40.0	12	14.0	30	B	116	**RI1/4X1/2**	400	400	250
G 1/4 A	G 3/4	18	5	43.0	12	16.0	36	B	170	**RI1/4X3/4**	315	315	200
G 3/8 A	G 1/8	22		22.5	12	8.0	22	A	39	**RI3/8X1/8**	400	400	250
G 3/8 A	G 1/4	22	8	36.0	12	12.0	22	B	68	**RI3/8X1/4**	400	400	250
G 3/8 A	G 1/2	22	8	41.0	12	14.0	30	B	125	**RI3/8X1/2**	400	400	250
G 3/8 A	G 3/4	22	8	44.0	12	16.0	36	B	183	**RI3/8X3/4**	315	315	200
G 1/2 A	G 1/8	26		24.0	14	8.0	27	A	66	**RI1/2X1/8**	400	400	250
G 1/2 A	G 1/4	26		24.0	14	12.0	27	A	56	**RI1/2X1/4**	315	315	200
G 1/2 A	G 3/8	26	12	37.0	14	12.0	27	B	94	**RI1/2X3/8**	315	315	200
G 1/2 A	G 3/4	26	12	46.0	14	16.0	36	B	182	**RI1/2X3/4**	315	315	200
G 1/2 A	G 1	26	12	49.0	14	18.0	41	B	221	**RI1/2X1**	315	315	200
G 1/2 A	G 1 1/4	26	10	53.0	14	20.0	55	B	482	**RI1/2X11/4**	160	160	
G 3/4 A	G 1/4	32		26.0	16	12.0	32	A	103	**RI3/4X1/4**	315	315	200
G 3/4 A	G 3/8	32		26.0	16	12.0	32	A	87	**RI3/4X3/8**	315	315	200
G 3/4 A	G 1/2	32	16	40.0	16	14.0	32	B	143	**RI3/4X1/2**	315	315	200
G 3/4 A	G 1	32	16	51.0	16	18.0	41	B	235	**RI3/4X1**	315	315	200
G 3/4 A	G 1 1/4	32	16	55.0	16	20.0	55	B	481	**RI3/4X11/4**	160	160	
G 3/4 A	G 1 1/2	32	16	57.0	16	22.0	60	B	560	**RI3/4X11/2**	160	160	
G 1 A	G 1/4	39		29.0	18	12.0	41	A	195	**RI1X1/4**	315	315	
G 1 A	G 3/8	39		29.0	18	12.0	41	A	179	**RI1X3/8**	315	315	200
G 1 A	G 1/2	39		29.0	18	14.0	41	A	157	**RI1X1/2**	315	315	200
G 1 A	G 3/4	39	20	47.0	18	16.0	41	B	278	**RI1X3/4**	315	315	200
G 1 A	G 1 1/4	39	20	57.0	18	20.0	55	B	530	**RI1X11/4**	160	160	100
G 1 A	G 1 1/2	39	20	59.0	18	22.0	60	B	585	**RI1X11/2**	160	160	100
G 1 1/4 A	G 1/2	49		32.0	20	14.0	50	A	308	**RI11/4X1/2**	160	160	100
G 1 1/4 A	G 3/4	49		32.0	20	16.0	50	A	267	**RI11/4X3/4**	160	160	100
G 1 1/4 A	G 1	49	25	52.0	20	18.0	50	B	458	**RI11/4X1**	160	160	100
G 1 1/4 A	G 1 1/2	49	25	60.0	20	22.0	60	B	616	**RI11/4X11/2**	160	160	100
G 1 1/2 A	G 1/2	55		36.0	22	14.0	55	A	477	**RI11/2X1/2**	160	160	100
G 1 1/2 A	G 3/4	55		36.0	22	16.0	55	A	402	**RI11/2X3/4**	160	160	100
G 1 1/2 A	G 1	55		36.0	22	18.0	55	A	337	**RI11/2X1**	160	160	100
G 1 1/2 A	G 1 1/4	55	32	58.0	22	20.0	55	B	542	**RI11/2X11/4**	160	160	100
G 2 A	G 1 1/2	68	40	62.0	24	22.0	70	B	990	**RI2X11/2**	160		

[1]) Pressure shown = item deliverable

$\frac{\text{PN (bar)}}{10}$ = PN (MPa)

*Please add the **suffixes** below according to the material/surface required.

Order code suffixes		
Material	Suffix surface and material	Example
Steel, zinc plated, Cr(VI)-free	CFX	RI1X1/2CFX
Stainless Steel	71X	RI1X1/271X
Brass	MSX	RI1X1/2MSX

MAV Pressure gauge connector

Female BSPP thread / EO 24° cone end
Port acc. to ISO 1179-1

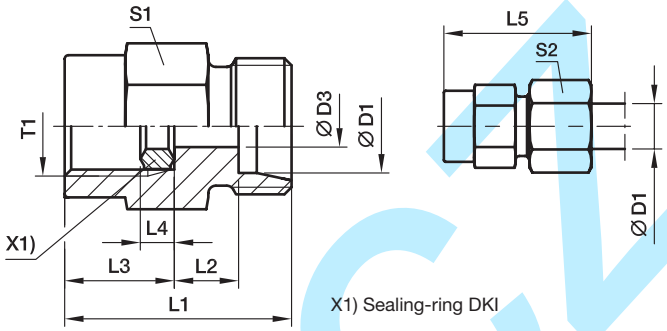

Series	D1	T1	D3	L1	L2	L3	L4	L5	S1	S2	Weight g/1 piece	Order code*	PN (bar)[1] CF	71	MS
LL[2])	04	G 1/4	2.5	27	7.5	15.5	4.5	33	19	10	33	**MAV04LLROMD**	100		
L[3])	06	G 1/4	2.5	29	6.5	15.5	4.5	37	19	14	37	**MAV06LROMD**	500	315	200
	08	G 1/4	5.5	29	6.5	15.5	4.5	37	19	17	38	**MAV08LROMD**	500	315	200
	10	G 1/4	5.5	30	6.5	15.5	4.5	38	19	19	41	**MAV10LROMD**	500	315	200
	12	G 1/4	5.5	30	6.5	15.5	4.5	38	19	22	43	**MAV12LROMD**	400	315	200
S[4])	06	G 1/2	3.5	38	11.0	20.0	5.0	46	27	17	86	**MAV06SROMD**	630	630	400
	08	G 1/2	3.5	38	11.0	20.0	5.0	46	27	19	86	**MAV08SROMD**	630	630	400
	10	G 1/2	7.5	38	10.5	20.0	5.0	47	27	22	88	**MAV10SROMD**	630	630	400
	12	G 1/2	7.5	38	10.5	20.0	5.0	47	27	24	93	**MAV12SROMD**	630	630	400

[1]) Pressure shown = item deliverable

[2]) LL = very light series; [3]) L = light series; [4]) S = heavy series

$\frac{\text{PN (bar)}}{10}$ = PN (MPa)

Delivery without nut and ring. Information on ordering complete fittings see page I7.

*Please add the **suffixes** below according to the material/surface required.

Order code suffixes		
Material	Suffix surface and material	Example
Steel, zinc plated, Cr(VI)-free	CF	MAV10SROMDCF
Stainless Steel	71	MAV10SROMD71
Brass	MS	MAV10SROMDMS

kovaz.cz

MAVE Pressure gauge swivel connector

Female BSPP thread / EO 24° DKO swivel
Port acc. to ISO 1179-1

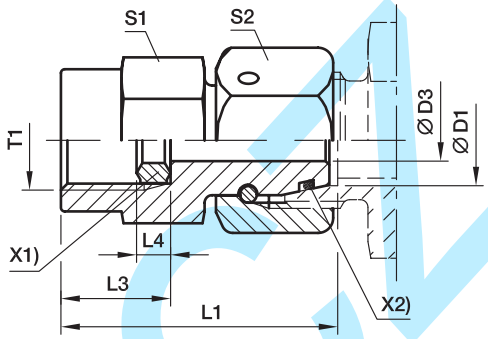

X1) Sealing-ring DKI
X2) O-ring OR

Series	D1	T1	D3	L1	L3	L4	S1	S2	Weight g/1 piece	Order code*	PN (bar)[1] CF	PN (bar)[1] 71
L[3])	06	G 1/4	2.5	35.5	15.5	4.5	19	14	46	**MAVE06LR**	500	315
	08	G 1/4	4.0	35.5	15.5	4.5	19	17	52	**MAVE08LR**	500	315
	10	G 1/4	5.5	36.0	15.5	4.5	19	19	59	**MAVE10LR**	500	315
	12	G 1/4	5.5	36.0	15.5	4.5	19	22	70	**MAVE12LR**	400	315
S[4])	06	G 1/2	2.5	42.5	20.0	5.0	27	17	95	**MAVE06SR**	630	630
	06	G 1/4	2.5	35.5	15.5	4.5	19	17	52	**MAVE06SR1/4**	630	630
	08	G 1/2	4.0	43.0	20.0	5.0	27	19	100	**MAVE08SR**	630	630
	08	G 1/4	4.0	35.5	15.5	4.5	19	19	58	**MAVE08SR1/4**	630	630
	10	G 1/2	6.0	43.5	20.0	5.0	27	22	109	**MAVE10SR**	630	630
	10	G 1/4	7.0	39.0	15.5	4.5	19	22	67	**MAVE10SR1/4**	630	630
	12	G 1/2	7.0	45.0	20.0	5.0	27	24	125	**MAVE12SR**	630	630
	12	G 1/4	7.0	39.0	15.5	4.5	19	24	83	**MAVE12SR1/4**	630	630

[1]) Pressure shown = item deliverable
[3]) L = light series; [4]) S = heavy series

$\frac{\text{PN (bar)}}{10}$ = PN (MPa)

Information on ordering alternative sealing materials see page I7.

*Please add the **suffixes** below according to the material/surface required.

Order code suffixes			
Material	Suffix surface and material	Example	Standard sealing material (no additonal. suffix needed)
Steel, zinc plated, Cr(VI)-free	CF	MAVE10SRCF	NBR
Stainless Steel	71	MAVE10SR71	VIT

Kovalent

ROV Blanking plug for tube ends

EO 24°cone end

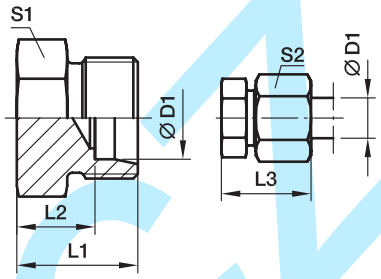

Series	D1	L1	L2	L3	S1	S2	Weight g/1 piece	Order code*	PN (bar)[1] CF	PN (bar)[1] 71
L[3])	06	14	7.0	22	12	14	8	**ROV06L**	315	315
	08	15	8.0	23	14	17	13	**ROV08L**	315	315
	10	16	9.0	24	17	19	17	**ROV10L**	315	315
	12	17	10.0	25	19	22	24	**ROV12L**	315	315
	15	18	11.0	26	24	27	41	**ROV15L**	315	315
	18	19	11.5	28	27	32	56	**ROV18L**	315	315
	22	21	13.5	30	32	36	84	**ROV22L**	160	160
	28	22	14.5	31	41	41	138	**ROV28L**	160	160
	35	25	14.5	36	46	50	203	**ROV35L**	160	160
	42	27	16.0	39	55	60	318	**ROV42L**	160	160
S[4])	06	18	11.0	26	14	17	17	**ROV06S**	630	630
	08	20	13.0	28	17	19	28	**ROV08S**	630	630
	10	20	12.5	29	19	22	33	**ROV10S**	630	630
	12	22	14.5	31	22	24	50	**ROV12S**	630	630
	16	24	15.5	34	27	30	75	**ROV16S**	400	400
	20	28	17.5	39	32	36	125	**ROV20S**	400	400
	25	32	20.0	44	41	46	229	**ROV25S**	400	400
	30	34	20.5	47	46	50	310	**ROV30S**	400	400
	38	39	23.0	54	55	60	508	**ROV38S**	315	315

[1]) Pressure shown = item deliverable

[3]) L = light series; [4]) S = heavy series

$\frac{\text{PN (bar)}}{10}$ = PN (MPa)

Delivery without nut and ring. Information on ordering complete fittings see page I7.

*Please add the **suffixes** below according to the material/surface required.

Order code suffixes		
Material	Suffix surface and material	Example
Steel, zinc plated, Cr(VI)-free	CFX	ROV16SCFX
Stainless Steel	71X	ROV16S71X

VSTI M-OR Blanking plug for ports

Male metric thread – O-ring (ISO 6149)

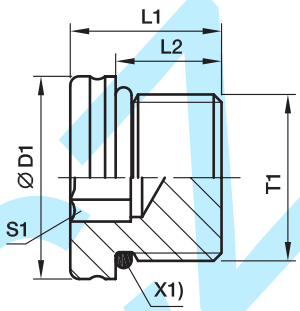

X1) O-ring OR

T1	D1	L1	L2	S1	Weight g/1 piece	Order code*	PN (bar)[1)] CF
M 08×1.0	12	13.0	9.5	4	6	**VSTI8X1OR**	630
M 10×1.0	13	13.5	9.5	5	8	**VSTI10X1OR**	630
M 12×1.5	17	15.0	11.0	6	14	**VSTI12X1.5OR**	630
M 14×1.5	19	16.0	11.0	6	20	**VSTI14X1.5OR**	630
M 16×1.5	21	17.5	12.5	8	26	**VSTI16X1.5OR**	630
M 18×1.5	23	19.0	14.0	8	37	**VSTI18X1.5OR**	630
M 22×1.5	27	20.0	15.0	10	58	**VSTI22X1.5OR**	630
M 26×1.5	31	21.0	16.0	12	77	**VSTI26X1.5OR**	400
M 27×2.0	32	23.5	18.5	12	95	**VSTI27X2OR**	400
M 33×2.0	38	25.0	18.5	14	148	**VSTI33X2OR**	400
M 42×2.0	48	25.5	19.0	22	233	**VSTI42X2OR**	400
M 48×2.0	55	28.0	21.5	24	336	**VSTI48X2OR**	400

[1]) Pressure shown = item deliverable

$\frac{\text{PN (bar)}}{10}$ = PN (MPa)

Information on ordering alternative sealing materials see page I7.

*Please add the **suffixes** below according to the material/surface required.

Order code suffixes			
Material	Suffix surface and material	Example	Standard sealing material (no additonal. suffix needed)
Steel, zinc plated, Cr(VI)-free	CF	VSTI18X1.5ORCF	NBR

Kovaz

VSTI M/R-ED Blanking plug for ports

Male metric thread – ED-seal (ISO 9974)
Male BSPP thread – ED-seal (ISO 1179)

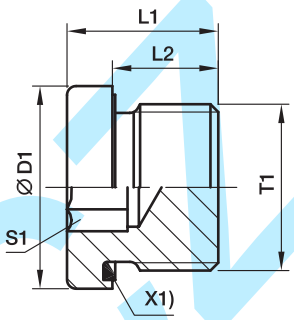

X1) Eolastic-sealing ED

Male metric parallel thread T1	Male stud BSP thread T1	D1	L1	L2	S1	Weight g/1 piece	Order code*	Order code*	PN (bar)[1] CF	PN (bar)[1] 71
M 10×1.0	G 1/8 A	14.0	12.3	8	5	8	**VSTI10X1ED**	**VSTI1/8ED**	400	400
M 12×1.5		17.0	17.3	12	6	14	**VSTI12X1.5ED**		400	400
M 14×1.5	G 1/4 A	19.0	17.3	12	6	20	**VSTI14X1.5ED**	**VSTI1/4ED**	400	400
M 16×1.5	G 3/8 A	22.0	17.3	12	8	25	**VSTI16X1.5ED**	**VSTI3/8ED**	400	400
M 18×1.5		24.0	17.3	12	8	32	**VSTI18X1.5ED**		400	400
M 20×1.5		26.0	19.3	14	10	42	**VSTI20X1.5ED**		400	400
M 22×1.5	G 1/2 A	27.0	19.3	14	10	51	**VSTI22X1.5ED**	**VSTI1/2ED**	400	400
M 26×1.5		32.0	21.3	16	12	78	**VSTI26X1.5ED**		400	400
M 27×2.0	G 3/4 A	32.0	21.3	16	12	79	**VSTI27X2ED**	**VSTI3/4ED**	400	400
M 33×2.0	G 1 A	40.0	22.8	16	17	130	**VSTI33X2ED**	**VSTI1ED**	400	400
M 42×2.0	G 1 1/4 A	50.0	22.8	16	22	198	**VSTI42X2ED**	**VSTI11/4ED**	315	315
M 48×2.0	G 1 1/2 A	55.0	22.8	16	24	263	**VSTI48X2ED**	**VSTI11/2ED**	315	315

[1]) Pressure shown = item deliverable

$\frac{\text{PN (bar)}}{10}$ = PN (MPa)

Information on ordering alternative sealing materials see page I7.

*Please add the **suffixes** below according to the material/surface required.

Order code suffixes			
Material	Suffix surface and material	Example	Standard sealing material (no additonal. suffix needed)
Steel, zinc plated, Cr(VI)-free	CF	VSTI1/2EDCF	NBR
Stainless Steel	71	VSTI1/2ED71	VIT

VKA Blanking plug for cones

EO 24° DKO swivel

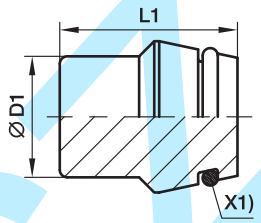

X1) O-ring OR

Series	D1	L1	Weight g/1 piece	Order code*	PN (bar)[1] CF	71	MS
L[3]	06	18.5	6	**VKA06**	500	315	200
	08	18.5	9	**VKA08**	500	315	200
	10	20.0	15	**VKA10**	500	315	200
	12	20.5	21	**VKA12**	400	315	200
	15	20.5	32	**VKA15**	400	315	200
	18	22.5	49	**VKA18**	400	315	200
	22	25.0	80	**VKA22**	250	160	100
	28	25.5	131	**VKA28**	250	160	100
	35	30.0	240	**VKA35**	250	160	100
	42	30.0	343	**VKA42**	250	160	100
S[4]	06	18.5	6	**VKA06**	800	630	400
	08	18.5	9	**VKA08**	800	630	400
	10	20.0	15	**VKA10**	800	630	400
	12	20.5	21	**VKA12**	630	630	400
	16	23.5	40	**VKA16**	630	400	250
	20	28.5	78	**VKA20**	420	400	250
	25	29.0	120	**VKA25**	420	400	250
	30	30.5	180	**VKA30**	420	400	250
	38	33.0	309	**VKA38**	420	315	200

[1]) Pressure shown = item deliverable

[3]) L = light series; [4]) S = heavy series

$\frac{\text{PN (bar)}}{10}$ = PN (MPa)

Information on ordering alternative sealing materials see page I7.

*Please add the **suffixes** below according to the material/surface required.

Order code suffixes			
Material	Suffix surface and material	Example	Standard sealing material (no additonal. suffix needed)
Steel, zinc plated, Cr(VI)-free	CF	VKA16CF	NBR
Stainless Steel	71	VKA1671	VIT
Brass	MS	VKA16MS	NBR

KOVAZ.CZ

VKAM Blanking plug with nut for cone

EO 24° DKO swivel

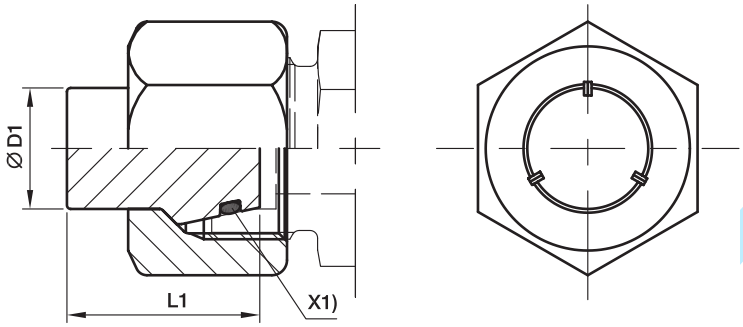

X1) O-ring OR

Series	D1	L1	Weight g/1 piece	Order code*	PN (bar)[1] CF	PN (bar)[1] 71
L[3])	06	18.5	15	**VKAM06L**	500	315
	08	18.5	24	**VKAM08L**	500	315
	10	20.0	33	**VKAM10L**	500	315
	12	20.5	46	**VKAM12L**	400	315
	15	20.5	73	**VKAM15L**	400	315
	18	22.5	111	**VKAM18L**	400	315
	22	25.0	162	**VKAM22L**	250	160
	28	25.5	220	**VKAM28L**	250	160
	35	30.0	376	**VKAM35L**	250	160
	42	30.0	558	**VKAM42L**	250	160
S[4])	06	18.5	23	**VKAM06S**	800	630
	08	18.5	29	**VKAM08S**	800	630
	10	20.0	46	**VKAM10S**	800	630
	12	20.5	55	**VKAM12S**	630	630
	16	23.5	106	**VKAM16S**	630	400
	20	28.5	180	**VKAM20S**	420	400
	25	29.0	322	**VKAM25S**	420	400
	30	30.5	398	**VKAM30S**	420	400
	38	33.0	647	**VKAM38S**	420	315

[1]) Pressure shown = item deliverable

[3]) L = light series; [4]) S = heavy series

$\frac{\text{PN (bar)}}{10}$ = PN (MPa)

Information on ordering alternative sealing materials see page I7.

*Please add the **suffixes** below according to the material/surface required.

Order code suffixes			
Material	Suffix surface and material	Example	Standard sealing material (no additonal. suffix needed)
Steel, zinc plated, Cr(VI)-free	CF	VKAM16SCF	NBR
Stainless Steel	71	VKAM16S71	VIT

BUZ Blanking plug for cones

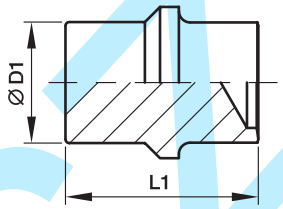

Series	D1	L1	Weight g/1 piece	Order code*	PN (bar)[1] CF	71	MS
L[3])	06	19.5	5	**BUZ06L**	315	315	200
	08	19.5	8	**BUZ08L**	315	315	200
	10	21.0	13	**BUZ10L**	315	315	200
	12	21.8	20	**BUZ12L**	315	315	200
	15	22.0	30	**BUZ15L**	315	315	200
	18	24.0	45	**BUZ18L**	315	315	200
	22	26.0	74	**BUZ22L**	160	160	100
	28	26.5	117	**BUZ28L**	160	160	100
	35	32.0	217	**BUZ35L**	160	160	100
	42	32.5	308	**BUZ42L**	160	160	100
S[4])	06	19.5	5	**BUZ06L**	630	630	400
	08	19.5	8	**BUZ08L**	630	630	400
	10	21.0	13	**BUZ10L**	630	630	400
	12	21.8	20	**BUZ12L**	630	630	400
	16	25.5	39	**BUZ16S**	400	400	250
	20	30.5	73	**BUZ20S**	400	400	250
	25	32.5	119	**BUZ25S**	400	400	250
	30	35.5	181	**BUZ30S**	400	400	250
	38	40.0	325	**BUZ38S**	315	315	200

[1]) Pressure shown = item deliverable

[3]) L = light series; [4]) S = heavy series

$\frac{\text{PN (bar)}}{10}$ = PN (MPa)

*Please add the **suffixes** below according to the material/surface required.

Order code suffixes		
Material	Suffix surface and material	Example
Steel, zinc plated, Cr(VI)-free	CFX	BUZ16SCFX
Stainless Steel	71X	BUZ16S71X
Brass	MSX	BUZ16SMSX

Kovaz.cz

BUZM Blanking plug with nut for cones

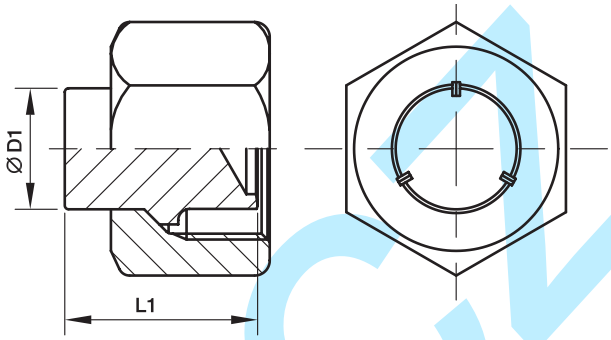

Series	D1	L1	Weight g/1 piece	Order code*	PN (bar)[1] CF	PN (bar)[1] 71
L[3])	06	19.5	15	**BUZM06L**	315	315
	08	19.5	23	**BUZM08L**	315	315
	10	21.0	31	**BUZM10L**	315	315
	12	21.8	45	**BUZM12L**	315	315
	15	22.0	71	**BUZM15L**	315	315
	18	24.0	107	**BUZM18L**	315	315
	22	26.0	156	**BUZM22L**	160	160
	28	26.5	206	**BUZM28L**	160	160
	35	32.0	354	**BUZM35L**	160	160
	42	32.5	524	**BUZM42L**	160	160
S[4])	06	19.5	23	**BUZM06S**	630	630
	08	19.5	28	**BUZM08S**	630	630
	10	21.0	44	**BUZM10S**	630	630
	12	21.8	54	**BUZM12S**	630	630
	16	25.5	105	**BUZM16S**	400	400
	20	30.5	176	**BUZM20S**	400	400
	25	32.5	321	**BUZM25S**	400	400
	30	35.5	399	**BUZM30S**	400	400
	38	40.0	664	**BUZM38S**	315	315

[1]) Pressure shown = item deliverable
[3]) L = light series; [4]) S = heavy series

$\frac{\text{PN (bar)}}{10}$ = PN (MPa)

*Please add the **suffixes** below according to the material/surface required.

Order code suffixes		
Material	Suffix surface and material	Example
Steel, zinc plated, Cr(VI)-free	CF	BUZM16SCF
Stainless Steel	71	BUZM16S71

GM Locknut for bulk heads

For bulkhead SV and WSV

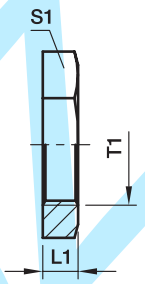

Series	Tube O.D.	T1	L1	S1	Weight g/1 piece	Order code Steel CF	Stainless Steel 71	Brass MS
L[3])	06	M 12×1.5	6	17	7	**GM06LCFX**	**GM06L71X**	**GM06LMSX**
	08	M 14×1.5	6	19	8	**GM08LCFX**	**GM08L71X**	**GM08LMSX**
	10	M 16×1.5	6	22	11	**GM10LCFX**	**GM10L71X**	**GM10LMSX**
	12	M 18×1.5	6	24	12	**GM12LCFX**	**GM12L71X**	**GM12LMSX**
	15	M 22×1.5	7	30	23	**GM15LCFX**	**GM15L71X**	**GM15LMSX**
	18	M 26×1.5	8	36	37	**GM18LCFX**	**GM18L71X**	**GM18LMSX**
	22	M 30×2.0	8	41	46	**GM22LCFX**	**GM22L71X**	**GM22LMSX**
	28	M 36×2.0	9	46	58	**GM28LCFX**	**GM28L71X**	**GM28LMSX**
	35	M 45×2.0	9	55	71	**GM35LCFX**	**GM35L71X**	**GM35LMSX**
	42	M 52×2.0	10	65	123	**GM42LCFX**	**GM42L71X**	**GM42LMSX**
S[4])	06	M 14×1.5	6	19	8	**GM08LCFX**	**GM08L71X**	**GM06LMSX**
	08	M 16×1.5	6	22	11	**GM10LCFX**	**GM10L71X**	**GM10LMSX**
	10	M 18×1.5	6	24	12	**GM12LCFX**	**GM12L71X**	**GM12LMSX**
	12	M 20×1.5	6	27	15	**GM12SCFX**	**GM12S71X**	**GM12SMSX**
	16	M 24×1.5	7	32	24	**GM16SCFX**	**GM16S71X**	**GM16SMSX**
	20	M 30×2.0	8	41	46	**GM22LCFX**	**GM22L71X**	**GM22LMSX**
	25	M 36×2.0	9	46	58	**GM28LCFX**	**GM28L71X**	**GM28LMSX**
	30	M 42×2.0	9	50	58	**GM30SCFX**	**GM30S71X**	**GM30SMSX**
	38	M 52×2.0	10	65	123	**GM42LCFX**	**GM42L71X**	**GM42LMSX**

[3]) L = light series; [4]) S = heavy series

Kovo-CZ

VH Support sleeve

for thin-walled metal tubing

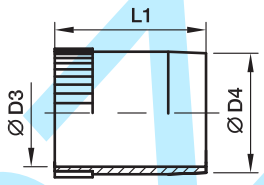

Tube I.D.	D3	D4	L1	Weight g/1 piece	Order code Steel CF	Stainless Steel 71	Brass MS
4.00	2.6	3.8	14.0	0.7	**VH04CFX**	**VH0471X**	**VH04MSX**
4.50	3.1	4.3	14.0	0.8	**VH04.5CFX**	**VH04.571X**	**VH04.5MSX**
5.00	3.6	4.8	14.0	0.8	**VH05CFX**	**VH0571X**	**VH05MSX**
6.00	4.6	5.8	14.0	1.0	**VH06CFX**	**VH0671X**	**VH06MSX**
6.50	5.1	6.3	14.0	1.0	**VH06.5CFX**	**VH06.571X**	**VH06.5MSX**
7.00	5.6	6.8	15.5	1.3	**VH07CFX**	**VH0771X**	**VH07MSX**
8.00	6.6	7.8	15.5	1.6	**VH08CFX**	**VH0871X**	**VH08MSX**
9.00	7.6	8.8	15.5	1.8	**VH09CFX**	**VH0971X**	**VH09MSX**
10.00	8.6	9.8	15.5	2.1	**VH10CFX**	**VH1071X**	**VH10MSX**
10.05	8.6	9.8	15.5	2.1	**VH10.05CFX**	**VH10.0571X**	**VH10.05MSX**
10.50	9.1	10.3	15.5	2.3	**VH10.5CFX**	**VH10.571X**	**VH10.5MSX**
11.00	9.6	10.8	15.5	2.6	**VH11CFX**	**VH1171X**	**VH11MSX**
12.00	10.2	11.8	17.0	3.7	**VH12CFX**	**VH1271X**	**VH12MSX**
12.95	11.2	12.8	17.0	3.9	**VH12.95CFX**	**VH12.9571X**	**VH12.95MSX**
13.00	11.2	12.8	17.0	3.9	**VH13CFX**	**VH1371X**	**VH13MSX**
14.00	12.2	13.8	17.0	4.3	**VH14CFX**	**VH1471X**	**VH14MSX**
15.00	13.2	14.8	20.0	5.7	**VH15CFX**	**VH1571X**	**VH15MSX**
16.00	14.2	15.8	20.0	5.8	**VH16.00CFX**	**VH16.0071X**	**VH16.00MSX**
16.20	14.2	15.8	20.0	5.8	**VH16CFX**	**VH1671X**	**VH16MSX**
17.00	15.2	16.8	20.0	6.3	**VH17CFX**	**VH1771X**	**VH17MSX**
18.00	16.2	17.8	20.0	6.3	**VH18CFX**	**VH1871X**	**VH18MSX**
19.00	17.2	18.8	16.0	5.8	**VH19CFX**	**VH1971X**	**VH19MSX**
19.90	18.2	19.8	21.5	7.9	**VH19.90CFX**	**VH19.9071X**	**VH19.90MSX**
20.00	18.2	19.8	21.5	7.9	**VH20CFX**	**VH2071X**	**VH20MSX**
21.00	19.2	20.8	21.5	8.0	**VH21CFX**	**VH2171X**	**VH21MSX**
22.00	20.2	21.8	23.5	9.7	**VH22CFX**	**VH2271X**	**VH22MSX**
23.00	21.2	22.8	23.5	10.6	**VH23CFX**	**VH2371X**	**VH23MSX**
24.00	22.2	23.8	23.5	11.1	**VH24CFX**	**VH2471X**	**VH24MSX**
24.90	23.3	24.8	23.5	10.8	**VH24.90CFX**	**VH24.9071X**	**VH2490MSX**
25.00	23.2	24.8	23.5	10.8	**VH25CFX**	**VH2571X**	**VH25MSX**
26.00	24.2	25.8	23.5	12.7	**VH26CFX**	**VH2671X**	**VH26MSX**
27.00	25.2	26.8	23.5	12.2	**VH27CFX**	**VH2771X**	**VH27MSX**
30.00	27.8	29.8	26.5	18.7	**VH30CFX**	**VH3071X**	**VH30MSX**
31.00	28.8	30.8	26.5	20.7	**VH31CFX**	**VH3171X**	**VH31MSX**
32.00	29.8	31.8	26.5	19.2	**VH32CFX**	**VH3271X**	**VH32MSX**
32.10	29.8	31.8	26.5	19.2	**VH32.10CFX**	**VH32.1071X**	**VH32.10MSX**
33.00	30.8	32.8	26.5	19.9	**VH33CFX**	**VH3371X**	**VH33MSX**
34.00	31.8	33.8	26.5	26.5	**VH34CFX**	**VH3471X**	**VH34MSX**
37.80	35.8	37.7	31.0	19.5	**VH37.8CFX**	**VH37.871X**	**VH37.8MSX**
38.00	35.8	37.8	21.0	19.7	**VH38CFX**	**VH3871X**	**VH38MSX**
39.00	36.8	38.8	21.0	19.5	**VH39CFX**	**VH3971X**	**VH39MSX**

E Tube/hose insert

for plastic tubing

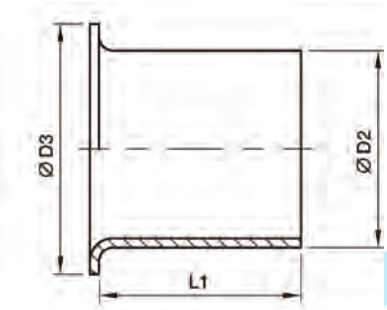

Tube O.D.	Tube I.D.	D2	D3	L1	Weight g/1 piece	Order code Brass
04	2.0	2.0	3.5	8	1	**E04/02X**
04	2.5	2.5	4.0	8	1	**E04/2.5X**
05	3.0	3.0	5.0	14	1	**E0506/03X**
06	3.0	3.0	5.0	14	1	**E0506/03X**
05	4.0	4.0	5.0	14	1	**E0506/04X**
06	4.0	4.0	5.0	14	1	**E0506/04X**
08	4.0	4.0	6.6	14	1	**E08/04X**
06	5.0	5.0	6.0	14	1	**E06/05X**
08	5.0	5.0	6.0	14	1	**E08/05X**
10	6.0	6.0	8.0	15	1	**E0810/06X**
08	6.0	6.0	8.0	15	1	**E0810/06X**
10	8.0	8.0	10.0	15	1	**E10/08X**
12	8.0	8.0	12.0	15	2	**E12/08X**
12	9.0	9.0	12.0	15	2	**E12/09X**
12	10.0	10.0	12.0	15	2	**E1215/10X**
15	12.0	12.0	14.8	15	3	**E15/12X**
15	12.5	12.5	14.8	15	3	**E1516/12.5X**
16	12.5	12.5	14.8	15	3	**E1516/12.5X**
18	14.0	14.0	17.8	15	4	**E18/14X**
18	16.0	16.0	17.8	20	4	**E1820/16X**
20	16.0	16.0	17.8	20	4	**E1820/16X**
22	18.0	18.0	21.8	16	5	**E22/18X**

Kovaz.cz

DOZ EO-2 Soft sealing ring

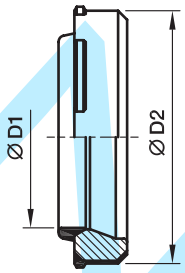

Assembly direction:
Sealing lip shows to the tube end

Series	D1	D2	Weight g/1 piece	Order code Steel NBR	Steel FKM	Stainless Steel FKM	Stainless Steel NBR
LL[2])	04	6.8	1	**DOZ04LL**	–	–	–
	06	8.8	1	**DOZ06LL**	–	–	–
L[3])	06	10.3	1	**DOZ06L**	**DOZ06LVIT**	**DOZ06L71**	**DOZ06LNBR71**
	08	12.3	1	**DOZ08L**	**DOZ08LVIT**	**DOZ08L71**	**DOZ08LNBR71**
	10	14.3	2	**DOZ10L**	**DOZ10LVIT**	**DOZ10L71**	**DOZ10LNBR71**
	12	16.3	2	**DOZ12L**	**DOZ12LVIT**	**DOZ12L71**	**DOZ12LNBR71**
	15	20.3	3	**DOZ15L**	**DOZ15LVIT**	**DOZ15L71**	**DOZ15LNBR71**
	18	24.3	5	**DOZ18L**	**DOZ18LVIT**	**DOZ18L71**	**DOZ18LNBR71**
	22	27.7	6	**DOZ22L**	**DOZ22LVIT**	**DOZ22L71**	**DOZ22LNBR71**
	28	33.7	7	**DOZ28L**	**DOZ28LVIT**	**DOZ28L71**	**DOZ28LNBR71**
	35	42.7	14	**DOZ35L**	**DOZ35LVIT**	**DOZ35L71**	**DOZ35LNBR71**
	42	49.7	17	**DOZ42L**	**DOZ42LVIT**	**DOZ42L71**	**DOZ42LNBR71**
S[4])	06	12.3	2	**DOZ06S**	**DOZ06SVIT**	**DOZ06S71**	**DOZ06SNBR71**
	08	14.3	2	**DOZ08S**	**DOZ08SVIT**	**DOZ08S71**	**DOZ08SNBR71**
	10	16.3	3	**DOZ10S**	**DOZ10SVIT**	**DOZ10S71**	**DOZ10SNBR71**
	12	18.3	4	**DOZ12S**	**DOZ12SVIT**	**DOZ12S71**	**DOZ12SNBR71**
	16	22.3	5	**DOZ16S**	**DOZ16SVIT**	**DOZ16S71**	**DOZ16SNBR71**
	20	27.7	9	**DOZ20S**	**DOZ20SVIT**	**DOZ20S71**	**DOZ20SNBR71**
	25	33.7	13	**DOZ25S**	**DOZ25SVIT**	**DOZ25S71**	**DOZ25SNBR71**
	30	39.7	18	**DOZ30S**	**DOZ30SVIT**	**DOZ30S71**	**DOZ30SNBR71**
	38	49.7	27	**DOZ38S**	**DOZ38SVIT**	**DOZ38S71**	**DOZ38SNBR71**

[2]) LL = very light series; [3]) L = light series; [4]) S = heavy series

ED Eolastic soft seal (for BSPP and metric parallel threads)

For Type: GE…ED, EGE…ED, EVGE…ED, EW…ED, EV…ED, ET…ED, EL…ED, VSTI…ED,RI…ED

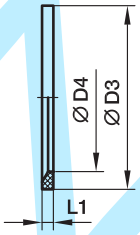

Male stud metric thread T1	Male stud BSP thread T1	D3	D4	L1	Weight g/1 piece	Order code NBR	Order code FKM
M 08×1.0		9.9	6.5	1.0	0.1	**ED8X1X**	**ED8X1VITX**
M 10×1.0	G 1/8 A	11.9	8.4	1.0	0.1	**ED10X1X**	**ED10X1VITX**
M 12×1.5		14.4	9.8	1.5	0.2	**ED12X1.5X**	**ED12X1.5VITX**
M 14×1.5	G 1/4 A	16.5	11.6	1.5	0.2	**ED14X1.5X**	**ED14X1.5VITX**
M 16×1.5		18.9	13.8	1.5	0.1	**ED16X1.5X**	**ED16X1.5VITX**
	G 3/8 A	18.9	14.7	1.5	0.2	**ED3/8X**	**ED3/8VITX**
M 18×1.5		20.9	15.7	1.5	0.1	**ED18X1.5X**	**ED18X1.5VITX**
M 20×1.5		22.9	17.8	1.5	0.2	**ED20X1.5X**	**ED20X1.5VITX**
	G 1/2 A	23.9	18.5	1.5	0.3	**ED1/2X**	**ED1/2VITX**
M 22×1.5		24.3	19.6	1.5	0.2	**ED22X1.5X**	**ED22X1.5VITX**
M 26×1.5	G 3/4 A	29.2	23.9	1.5	0.4	**ED26X1.5X**	**ED26X1.5VITX**
M 27×2.0	G 3/4 A	29.2	23.9	1.5	0.4	**ED26X1.5X**	**ED26X1.5VITX**
M 33×2.0	G 1 A	35.7	29.7	2.0	0.7	**ED33X2X**	**ED33X2VITX**
M 42×2.0	G 1 1/4 A	45.8	38.8	2.0	0.9	**ED42X2X**	**ED42X2VITX**
M 48×2.0	G 1 1/2 A	50.7	44.7	2.0	1.0	**ED48X2X**	**ED48X2VITX**

Kovaz.cz

OR O-Ring for fittings with EO 24° DKO swivel

For Type:
DA, EGE, EGEO, MAVE, EW, EV, ET, EL, RED, GZ, GZR, VKA, VKAM

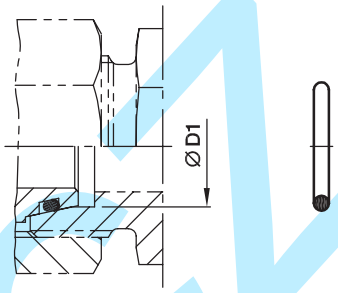

Series	D1	O-ring NBR Shore-hardness approx. 90	O-ring FKM Shore-hardness approx. 90
L[3])	6	**OR4.5X1.5X**	**OR4.5X1.5VITX**
	8	**OR6.5X1.5X**	**OR6.5X1.5VITX**
	10	**OR8.5X1.5X**	**OR8X1.5VITX**
	12	**OR10.5X1.5X**	**OR10X1.5VITX**
	15	**OR12.5X2X**	**OR12X2VITX**
	18	**OR16X2X**	**OR15X2VITX**
	22	**OR20X2X**	**OR20X2VITX**
	28	**OR26X2X**	**OR26X2VITX**
	35	**OR32X2.5X**	**OR32X2.5VITX**
	42	**OR39X2.5X**	**OR38X2.5VITX**
S[4])	6	**OR4.5X1.5X**	**OR4.5X1.5VITX**
	8	**OR6.5X1.5X**	**OR6.5X1.5VITX**
	10	**OR8.5X1.5X**	**OR8X1.5VITX**
	12	**OR10.5X1.5X**	**OR10X1.5VITX**
	16	**OR14X2X**	**OR13X2VITX**
	20	**OR17X2.5X**	**OR16.3X2.4VITX**
	25	**OR22X2.5X**	**OR20.3X2.4VITX**
	30	**OR27X2.5X**	**OR25.3X2.4VITX**
	38	**OR35X2.5X**	**OR33.3X2.4VITX**

[3]) L = light series; [4]) S = heavy series

KOVAZ.CZ

OR O-rings for male stud ends

Male metric thread – O-ring (ISO 6149)
Male UN/UNF thread – O-ring (ISO 11926)

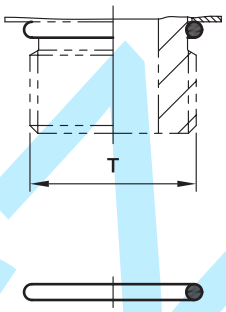

Types with metric thread:
VSTI-OR, GEO, EGEO

Thread T	O-ring NBR	O-ring FKM
M 08×1.0	**OR6.1X1.6**	**OR6.1X1.6VITX**
M 10×1.0	**OR8.1X1.6**	**OR8.1X1.6VITX**
M 12×1.5	**OR9.3X2.2**	**OR9.3X2.2VITX**
M 14×1.5	**OR11.3X2.2**	**OR11.3X2.2VITX**
M 16×1.5	**OR13.3X2.2**	**OR13.3X2.2VITX**
M 18×1.5	**OR15.3X2.2**	**OR15.3X2.2VITX**
M 22×1.5	**OR19.3X2.2**	**OR19.3X2.2VITX**
M 27×2.0	**OR23.6X2.9**	**OR23.6X2.9VITX**
M 33×2.0	**OR29.6X2.9**	**OR29.6X2.9VITX**
M 42×2.0	**OR38.6X2.9**	**OR38.6X2.9VITX**
M 48×2.0	**OR44.6X2.9**	**OR44.6X2.9VITX**

Types with UN/UNF thread:
GE-UNF

Thread T	O-ring NBR	O-ring FKM
7/16-20 UNF	**OR8.92X1.83**	**OR8.92X1.83VITX**
9/16-18 UNF	**OR11.89X1.98**	**OR11.89X1.98VITX**
3/4-16 UNF	**OR16.36X2.21**	**OR16.36X2.21VITX**
7/8-14 UNF	**OR19.18X2.46**	**OR19X2.5VITX**
1 1/16-12 UN	**OR23.47X2.95**	**OR23.47X2.95VITX**
1 5/16-12 UN	**OR29.74X2.95**	**OR29.74X2.95VITX**
1 5/8-12 UN	**OR37.46X3**	**OR37.46X3VITX**
1 7/8-12 UN	**OR43.69X3**	**OR43.69X3VITX**

OR O-rings and retaining rings for male stud ends

Adjustable BSPP thread – O-ring + retaining ring (ISO 1179)

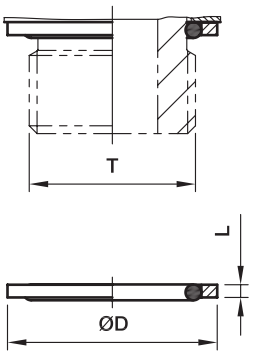

Types with BSPP thread: WEE-R

Thread T	Steel O-ring NBR	Steel D	Steel L	Steel Order code Retaining ring CF	Stainless Steel O-ring FKM	Stainless Steel D	Stainless Steel L	Stainless Steel Order code Retaining ring Stainless Steel
G 1/8 A	**OR8X1.88X**	14.8	1.4	**RRS1/8CF**	**same like steel**	15.0	1.4	**8207SS1/8**
G 1/4 A	**OR10.77X2.62X**	19.8	1.9	**RRS1/4CF**	**OR10.77X2.62VITX**	19.5	1.9	**8207SS1/4A**
G 3/8 A	**OR13.94X2.62X**	22.8	2.0	**RRS3/8CF**	**same like steel**	23.5	1.9	**8207SS3/8A**
G 1/2 A	**OR18X3.15X**	27.8	2.6	**RRS1/2CF**	**OR17.96X2.62VITX**	28.5	1.9	**8207SS1/2**
G 3/4 A	**OR23X3X**	32.8	2.5	**RRS3/4CF**	**OR23.47X2.62VITX**	34.5	1.9	**8207SS3/4**
G 1 A	**OR29.74X3.53X**	40.8	2.5	**RRS1CF**	**same like steel**	43.5	2.6	**8207SS1A**
G 1 1/4 A	**OR37.69X3.53X**	50.8	2.6	**RRS11/4CF**	**same like steel**	52.5	2.6	**8207SS11/4**
G 1 1/2 A	**OR44.04X3.53X**	55.8	2.6	**RRS11/2CF**	**same like steel**	60.0	2.6	**8207SS11/2**

Order code suffixes	
Material	Example
NBR	OR10.77X2.62X
FKM	OR10.77X2.62VITX

OR O-Rings for banjo fittings WH/TH

For WH / TH	For WH / TH	O-ring NBR	O-ring FKM
06LM/LR		**OR9.3X1.5X**	**OR9.3X1.5VITX**
08LM/LR	06SM/SR	**OR12.5X1.5X**	**OR12.5X1.5VITX**
10LM/LR	08SM/SR	**OR12.5X1.5X**	**OR12.5X1.5VITX**
12LM/LR	10SM/SR	**OR16X1.5X**	**OR16X1.5VITX**
	12SR	**OR16X1.5X**	**OR16X1.5VITX**
15LM	12SM	**OR18X1.5X**	**OR18X1.5VITX**
15LR		**OR20X1.5X**	**OR20X1.5VITX**
18LM/LR	16SM/SR	**OR20X1.5X**	**OR20X1.5VITX**
22LM/LR	20SM/SR	**OR25X2X**	**OR25X2VITX**
28LM/LR	25SM/SR	**OR33X2.5X**	**OR33X2.5VITX**
35LM/LR	30SM/SR	**OR41X2.5X**	**OR41X2.5VITX**
42LM/LR	38SM/SR	**OR46X3X**	**OR46X3VITX**

OR O-Rings for banjo elbows SWVE..M/R KDSOMD

For SWVE..M/R KDSOMD	O-ring NBR
04LLR/- | 06LLR/LLM | 08LLR/LLM | 06LR/LM	**OR9X1.2X**
08LM | 06SM	**OR10X1.5X**
08LR | 06SR | 10LR/LM | 08SR/LM	**OR12.5X1.5X**
12LR/LM | 10SR/LM | 12SR	**OR15X1.5X**
15LM | 12SM	**OR16X1.5X**
15LR	**OR19X1.5X**
18LR/LM | 16SR/SM	**OR20X1.5X**
22LR/LM | 20SR/SM	**OR25.12X1.78X**
28LR/LM | 25SR/SM	**OR33X2.5X**
35LR/LM | 30SR/SM	**OR41X2.5X**
42LR/LM | 38SR/SM	**OR46X3.0X**

DKI Sealing ring for pressure gauge connectors

Female thread	D1	D2	L1	Weight g/1 piece	Order code Steel CF	Order code Stainless Steel 71
G 1/4	6	11.3	4.5	2.5	**DKI1/4CFX**	**DKI1/471X**
G 1/2	12	18.5	5.0	5.0	**DKI1/2CFX**	**DKI1/271X**

KOVAZ.CZ

KDS Soft sealing ring for banjo fittings SWVE, WH and TH from steel

for small and wide spot faces of ports

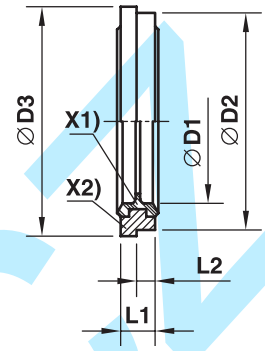

X1) NBR sealing
X2) Supporting-ring (Steel)

Male stud metric thread	Male stud BSPP thread	D1	D2	D3	L1	L2	Weight g/1 piece	Order code Steel/NBR
M 10×1.0	G 1/8 A	10.3	14.9	16.0	2.5	1.1	2	**KDS10X**
M 12×1.5		12.3	17.0	18.0	3.0	1.6	2	**KDS12X**
M 14×1.5	G 1/4 A	14.3	18.9	20.0	3.0	1.6	2	**KDS14X**
M 16×1.5	G 3/8 A	17.0	21.9	24.0	3.0	2.1	3	**KDS16X**
M 18×1.5		18.3	23.9	23.9	3.0		4	**KDS18X**
M 22×1.5	G 1/2 A	22.3	26.9	30.0	4.5	2.6	7	**KDS22X**
M 26×1.5		26.3	31.9	35.0	3.5	2.6	7	**KDS26X**
M 27×2.0	G 3/4 A	27.3	32.9	38.0	3.5	2.6	8	**KDS27X**
M 33×2.0	G 1 A	33.6	39.9	42.0	3.5	2.6	10	**KDS33X**
M 42×2.0	G 1 1/4 A	42.4	49.9	49.9	3.5		12	**KDS42X**
M 48×2.0	G 1 1/2 A	48.4	55.9	60.0	3.5	2.6	16	**KDS48X**

kovaz.cz

KD Soft sealing ring for banjo fittings WH/TH from stainless steel

for wide spot faces of ports

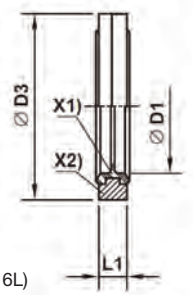

X1) Vulcanized FKM Seal
X2) Supporting-ring (Stainless Steel 316L)

Metric thread parallel	BSPP thread parallel	D1	D3	L1	Weight g/1 piece	Order code Stainless steel FKM
M 10×1.0	G 1/8 A	10.3	17.0	2.5	3	**KD10-1/8SS**
M 12×1.5		12.3	22.0	3.0	5	**KD12SS**
M 14×1.5	G 1/4 A	14.3	22.0	3.0	5	**KD14-1/4SS**
M 16×1.5	G 3/8 A	17.0	27.0	3.0	6	**KD16-3/8SS**
M 18×1.5		18.3	29.0	3.0	8	**KD18SS**
M 22×1.5	G 1/2 A	22.3	32.0	4.5	12	**KD22-1/2SS**
M 26×1.5		26.3	41.0	3.5	18	**KD26SS**
M 27×2.0	G 3/4 A	27.3	41.0	3.5	19	**KD27-3/4SS**
M 33×2.0	G 1 A	33.6	46.0	3.5	18	**KD33-1SS**
M 42×2.0	G 1 1/4 A	42.4	57.0	3.5	26	**KD42-11/4SS**
M 48×2.0	G 1 1/2 A	48.4	64.0	3.5	35	**KD48-11/2SS**

kovaz.si

DKA Sealing ring

for banjo fittings WH/TH and SWVE

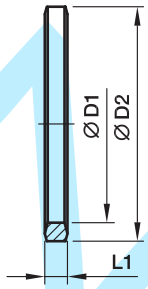

BSPP thread	D1	D2	L1	Weight g/1 piece	Order code Steel CF	Order code Stainless Steel 71
G 1/8 A	9.8	14	2.5	1	**DKA1/8CFX**	**DKA1/871X**
G 1/4 A	13.3	18	3.0	3	**DKA1/4CFX**	**DKA1/471X**
G 3/8 A	16.8	22	3.0	3	**DKA3/8CFX**	**DKA3/871X**
G 1/2 A	21.1	26	4.5	6	**DKA1/2X4.5CFX**	**DKA1/2X4.571X**
G 3/4 A	26.6	32	3.5	6	**DKA3/4CFX**	**DKA3/471X**
G 1 A	33.4	39	3.5	8	**DKA1CFX**	**DKA171X**
G 1 1/4 A	42.1	49	3.5	12	**DKA11/4CFX**	**DKA11/471X**
G 1 1/2 A	48.1	55	3.5	15	**DKA11/2CFX**	**DKA11/271X**

Male stud metric thread	D1	D2	L1	Weight g/1 piece	Order code Steel CF	Order code Stainless Steel 71
M 08×1.0	8.1	12	2.5	1	**DKA08CFX**	
M 10×1.0	10.1	14	3.0	1	**DKA10CFX**	**DKA1071X**
M 12×1.5	12.1	17	3.0	2	**DKA12CFX**	**DKA1271X**
M 14×1.5	14.1	19	3.0	3	**DKA14CFX**	**DKA1471X**
M 16×1.5	16.1	21	3.0	3	**DKA16CFX**	**DKA1671X**
M 18×1.5	18.1	23	3.0	3	**DKA18CFX**	**DKA1871X**
M 20×1.5	20.1	25	3.0	4	**DKA20CFX**	**DKA2071X**
M 22×1.5	22.1	27	4.5	6	**DKA22X4.5CFX**	**DKA22X4.571X**
M 26×1.5	26.1	31	3.5	6	**DKA26X3.5CFX**	**DKA26X3.571X**
M 27×2.0	27.1	32	3.5	6	**DKA27CFX**	**DKA2771X**
M 33×2.0	33.1	39	3.5	8	**DKA33CFX**	**DKA3371X**
M 42×2.0	42.1	49	3.5	12	**DKA11/4CFX**	**DKA11/471X**
M 48×2.0	48.1	55	3.5	15	**DKA11/2CFX**	**DKA11/271X**

KOVACZ

O-Lok®

O-Ring face seal tube fittings

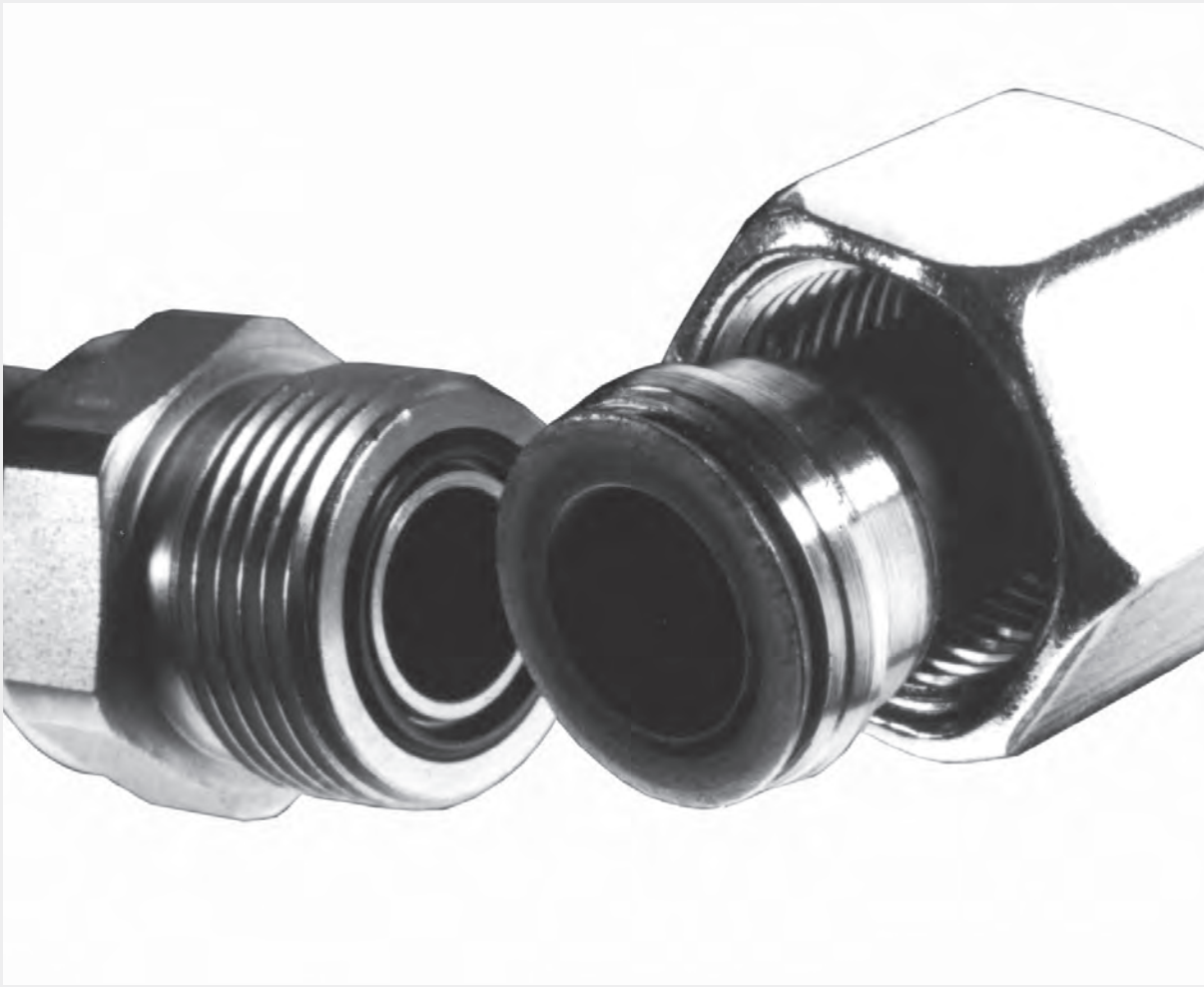

Visual index

Tube-Tube unions	**HMLO** p. J9 **EMLO** p. J10 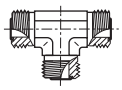 **JMLO** p. J11 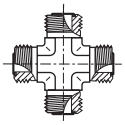 **KLO** p. J12
Bulkhead unions	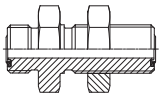 **WMLO** p. J13 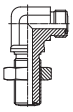 **WEMLO** p. J14 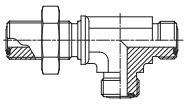 **WJJLO** p. J17 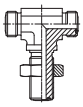 **WJLO** p. J16 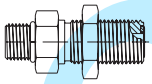 **WF5OLO** p. J29 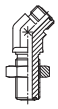 **WNLO** p. J15 **WLNML** p. J72
Tube to UNF thread	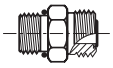 **F5OMLO** p. J27 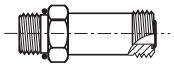 **FF5OMLO** p. J28 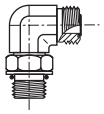 **C5OMLO** p. J39 **CC5OLO** p. J40 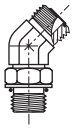 **V5OMLO** p. J45 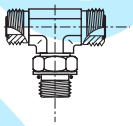 **S5OMLO** p. J49 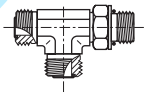 **R5OMLO** p. J53
Tube to BSPP thread	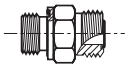 **F42EDMLO** p. J30 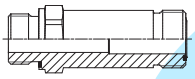 **FF42EDMLO** p. J31 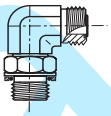 **C4OMLO** p. J41 **V4OMLO** p. J46 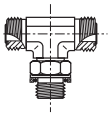 **S4OMLO** p. J50 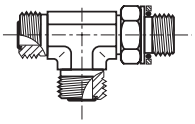 **R4OMLO** p. J54
Tube to metric ISO 6149-2 thread	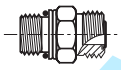 **F87OMLO** p. J26 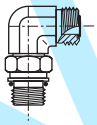 **C87OMLO** p. J38 **V87OMLO** p. J44 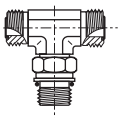 **S87OMLO** p. J48 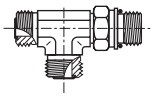 **R87OMLO** p. J52
Tube to metric thread	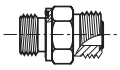 **F82EDMLO** p. J32 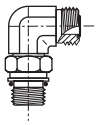 **C8OMLO** p. J42 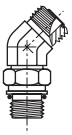 **V8OMLO** p. J47 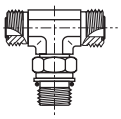 **S8OMLO** p. J51 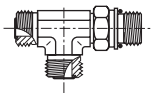 **R8OMLO** p. J55
Swivel fittings	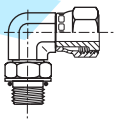 **AOEL6** p. J18 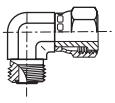 **C6MLO** p. J19 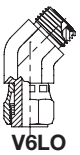 **V6LO** p. J20 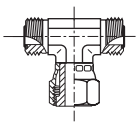 **S6MLO** p. J21 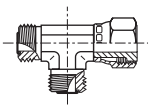 **R6MLO** p. J22

Visual index

Swivel nut to straight thread

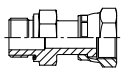

BSPP
F642EDML
p. J36

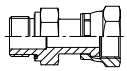

Metric
F682EDML
p. J37

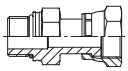

ISO Metric
F687OML
p. J34

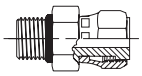

UNF
F65OL
p. J35

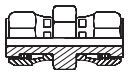

HL6
p. J25

Tube to NPTF thread

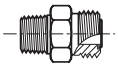

FLO
p. J33

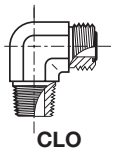

CLO
p. J43

Taper threads should not be used for new projects or designs.
Parker Hannifin recommends elastomerically sealed components.

Bleed adapters

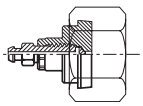

FNLBA
p. J69

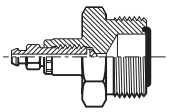

PNLOBA
p. J70

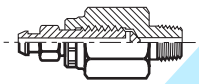

NPTF
HPBA
p. J71

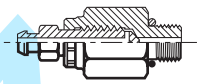

UNF
P5ONBA
p. J71

Test point and gauge adapters

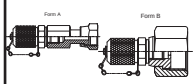

TTP4ML
p. J60

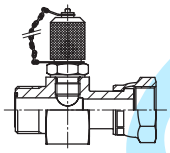

R6P4MLO
p. J61

G4MLOSMO
p. J57

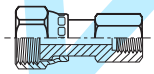

TT4ML
p. J58

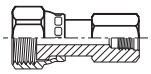

TT8ML
p. J59

G87MLO
p. J56

Sleeves for metric and inch tube

TPL
p. J6

TL
p. J7

TL Reducing Braze Sleeve
p. J8

Nuts, Reducers & Expanders

BML/BL
p. J5

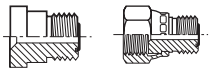

TRMLO
p. J23

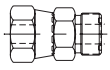

LOHL6
p. J24

Conversion adapters

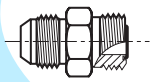

XHMLO
p. J65

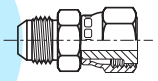

XHML6
p. J66

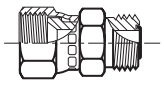

LOHMX6
p. J67

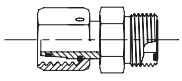

LOHU86
p. J68

Accessories

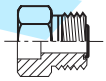

LOHB3
p. J62

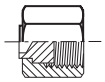

FNML
p. J63

PNMLO
p. J64

O-ring
p. J73–74

SBR Braze ring
p. J75

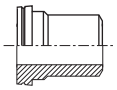

TW3L
p. J72

Kovak.cz

How to order O-Lok® fittings

	1	2	3	4	5	6	7	8
Example Order code	**6-8**	**C**	**5**	**O**	**M**	**L**	**O**	**S**

1 Order codes for tube and port thread ends

Dash Size	Tube Size (Inch)	Tube Size (mm)	O-Lok Tube Thread Size	Port Thread Size (Inch) BSPP/BSPT/ NPT	Port Thread Size UN / UNF
4	1/4	6	9/16-18	1/4	7/16-20
5			5/8-18		1/2-20
6	3/8	8,10	11/16-16	3/8	9/16-18
8	1/2	12	13/16-16	1/2	3/4-16
10	5/8	14,15,16	1-14	5/8	7/8-14
12	3/4	18,20	1 3/16-12	3/4	1 1/6-12
14			1 5/16-12		1 3/6-12
16	1	25	1 7/16-12	1	1 5/16-12
20	1 1/4	28,30,32	1 11/16-12	1 1/4	1 5/8-12
24	1 1/2	35,38	2-12	1 1/2	1 7/8-12
32	2	50	2 1/2-12	2	2 1/2-12

Metric port threads are shown as per example 4M12C87OMLOS

2 Codes for fitting styles/shapes

Code	Description
AE6	Straight Thread Swivel
B	Nut
C	Male Stud elbow
C6	Swivel Nut Elbow
E	Union elbow
F	Male Stud connector
FF	Extended Male Stud connector
F6	Male Stud Swivel
FN	Cap
FNLBAS	Bleed Adapter Cap
G	Female Connector
H	Straight union
H6	Swivel/Swivel Adapter
J	Union Tee
K	Union Cross
LOHB3	Braze Adapter
LOHX6	Triple-Lok® Swivel/O-Lok® adaptor
M	Female Run Tee
O	Female Branch Tee
PN	Plug
PNLOBA	Bleed Adapter Plug
R	Male Stud Run Tee
R6	Swivel Run Tee
S	Male Stud Branch Tee
S6	Swivel Branch Tee
SBR	Braze Ring
TPL	Parflange® sleeve
TL	Brazed sleeve
TR	Tube End Reducer
TT	Test Point Adapter
TW3	Weld Nipple
V	45° male stud elbow
V6	Swivel Nut 45° Elbow
W	Bulkhead Union
WE	Bulkhead Union Elbow
WJJ	Bulkhead Run Tee
WJT	Bulkhead Branch Tee
WLNML	Bulkhead Locknut
WN	Bulkhead 45° union elbow
XHL6	Triple Lok®/Swivel O-Lok® adaptor
XHLO	Triple Lok®/O-Lok® male adaptor

3 Threads and sealing methods

Code	Description
None	NPT/NPTF Thread
3	BSPT Thread
4	BSPP Thread O-Ring & Retainer Ring
42	BSPP Thread EOLASTIC seal 'ED'
5	UN/UNF Thread (O-Ring Seal)
8	Metric Thread O-Ring & Retainer Ring
82	Metric Thread EOLASTIC seal 'ED'
87	Metric ISO 6149 Thread (O-Ring Seal)
63	Swivel Connector BSPT end
64	Swivel Connector BSPP end (O-Ring & Retainer Ring)
642	Swivel Connector BSPP end (EOLASTIC Seal 'ED')
65	Swivel Connector UN/UNF end (O-Ring seal)
68	Swivel Connector Metric end (O-Ring & Retainer Ring)
682	Swivel Connector Metric end (EOLASTIC Seal 'ED')
687	Swivel Connector Metric ISO 6149 end

4 Stud connector seal

Code	Description
O	O-Ring Seal (Assembled on fitting)
ED	Captive EOLASTIC Seal (Assembled on fitting)
No Code	No Seal (O-Ring not assembled on fitting)

5 Hexagon/ Across flats style

Code	Description
M	Metric Hexagon Dimension
No Code	Inch Hexagon Dimension

6 Fitting type

Code	Description
L	Parker O-Lok®

7 Tube connection seal ORFS

Code	Description
O	O-Ring Seal (Assembled on Fitting)
No Code	No Seal/O-Ring

8 Fitting material

Code	Description
S	Steel
SS	Stainless Steel
B	Brass

Kovalcz

BML Nut

O-Lok® ORFS tube nut
SAE 52M0110 ISO 8434-3 NA

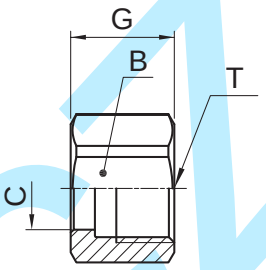

Tube O.D. mm	Tube O.D. in.	Thread UN/UNF-2B T	B mm	C mm	G mm	Weight (steel) g/1 piece	O-Lok® Steel	O-Lok® Stainless Steel
6	1/4	9/16-18	17	10.5	15	14	**4BMLS**	**4BMLSS**
8, 10	3/8	11/16-16	22	13.5	18	17	**6BMLS**	**6BMLSS**
12	1/2	13/16-16	24	16.6	20	29	**8BMLS**	**8BMLSS**
14, 15, 16	5/8	1-14	30	21.1	24	46	**10BMLS**	**10BMLSS**
18, 20	3/4	1 3/16-12	36	24.2	27	69	**12BMLS**	**12BMLSS**
22, 25	1	1 7/16-12	41	29.1	28	109	**16BMLS**	**16BMLSS**
28, 30, 32	1 1/4	1 11/16-12	50	36.0	28	126	**20BMLS**	**20BMLSS**
35, 38	1 1/2	2-12	60	44.0	28	195	**24BMLS**	**24BMLSS**
50	2	2 1/2-12	75	56.0	33	800	**32BMLS**	**32BMLSS**

Part numbers shown are part of our current manufacturing programme.
Do not create drawings from these dimensions, they are subject to change and ISO manufacturing allowances.

BL Nut

O-Lok® ORFS tube nut
SAE 520110

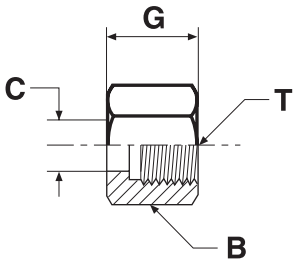

Tube O.D. mm	Tube O.D. in.	Thread UN/UNF-2B T	B in.	C mm	G mm	Weight (steel) g/1 piece	O-Lok® Steel	O-Lok® Stainless Steel
6	1/4	9/16-18	11/16	10.5	15	16	**4 BL-S**	**4 BL-SS**
8, 10	3/8	11/16-16	13/16	13.5	17	24	**6 BL-S**	**6 BL-SS**
12	1/2	13/16-16	15/16	16.6	21	37	**8 BL-S**	**8 BL-SS**
14, 15, 16	5/8	1-14	1 1/8	22.1	24	52	**10 BL-S**	**10 BL-SS**
18, 20	3/4	1 3/16-12	1 3/8	24.1	26	89	**12 BL-S**	**12 BL-SS**
22, 25	1	1 7/16-12	1 5/8	29.1	28	119	**16 BL-S**	**16 BL-SS**
28, 30, 32	1 1/4	1 11/16-12	1 7/8	36.0	28	132	**20 BL-S**	**20 BL-SS**
35, 38	1 1/2	2-12	2 1/4	44.0	28	220	**24 BL-S**	**24 BL-SS**
50	2	2 1/2-12	2 7/8	56.0	33	700	**32 BL-S**	**32 BL-SS**

Part numbers shown are part of our current manufacturing programme.
Do not create drawings from these dimensions, they are subject to change and ISO manufacturing allowances.

TPL Sleeve metric tubing

O-Lok® ORFS Parflange® tube sleeve

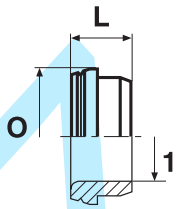

Tube O.D. 1 mm	L mm	O mm	Weight (steel) g/1 piece	O-Lok® Steel	O-Lok® Stainless Steel
6	8	13	4	**TPLS6**	**TPLSS6**
8	8	13	4	**TPLS8-6**	**TPLSS8-6**
8	9	16	4	**TPLS8**	**TPLSS8**
10	9	16	5	**TPLS10**	**TPLSS10**
10	11	19	6	**TPLS12-10**	**TPLSS12-10**
12	11	19	6	**TPLS12**	**TPLSS12**
14	11	23	10	**TPLS14**	**TPLSS14**
15	11	23	9	**TPLS15**	**TPLSS15**
16	11	23	8	**TPLS16**	**TPLSS16**
18	12	28	14	**TPLS18**	**TPLSS18**
20	12	28	15	**TPLS20**	**TPLSS20**
22	14	34	20	**TPLS22**	**TPLSS22**
25	13	34	23	**TPLS25**	**TPLSS25**
28	13	40	24	**TPLS28**	**TPLSS28**
30	13	40	25	**TPLS30**	**TPLSS30**
32	13	40	26	**TPLS32**	**TPLSS32**
35	13	48	36	**TPLS35**	**TPLSS35**
38	13	48	44	**TPLS38**	**TPLSS38**
50	14	61	180	**TPLS50**	**TPLSS50**

Part numbers shown are part of our current manufacturing programme.
Do not create drawings from these dimensions, they are subject to change and ISO manufacturing allowances.

TPL Sleeve inch tubing

O-Lok® ORFS Parflange® tube sleeve

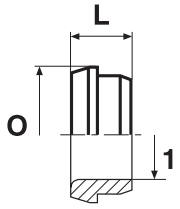

Tube O.D. 1 in.	L mm	O mm	Weight (steel) g/1 piece	O-Lok® Steel	O-Lok® Stainless Steel
1/4	8	13	4	**4 TPL-S**	**4 TPL-SS**
3/8	9	16	5	**6 TPL-S**	**6 TPL-SS**
1/2	11	19	6	**8 TPL-S**	**8 TPL-SS**
5/8	11	23	11	**10 TPL-S**	**10 TPL-SS**
3/4	12	28	19	**12 TPL-S**	**12 TPL-SS**
7/8	14	31	19	**14 TPL-S**	**14 TPL-SS**
1	14	34	22	**16 TPL-S**	**16 TPL-SS**
1 1/4	13	41	28	**20 TPL-S**	**20 TPL-SS**
1 1/2	13	48	44	**24 TPL-S**	**24 TPL-SS**
2	14	61	180	**32 TPL-S**	**32 TPL-SS**

Part numbers shown are part of our current manufacturing programme.
Do not create drawings from these dimensions, they are subject to change and ISO manufacturing allowances.

TL* Braze sleeve metric tubing

O-Lok® ORFS silver braze tube sleeve
SAE 52M0115 ISO 8434-3 BRSL
(*Parts delivered oil dipped finish only – steel)

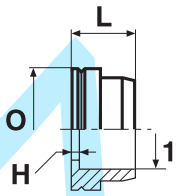

ORFS dash size	Tube O.D. 1 mm	H mm	L mm	O mm	Weight (steel) g/1 piece	O-Lok® Steel	O-Lok® Stainless Steel
4	6	1	10	13	5	**TLS6**	**TLSS6**
4	8	1	10	13	5	**TLS6-8**	**TLSS6-8**
5	8	1	10	16	7	**TLS8**	**TLSS8**
6	8	2	10	16	7	**TLS10-8**	**TLSS10-8**
6	10	1	10	16	7	**TLS10**	**TLSS10**
8	10	4	12	19	10	**TLS12-10**	**TLSS12-10**
8	12	1	10	19	10	**TLS12**	**TLSS12**
10	15	2	11	23	16	**TLS16-15**	**TLSS16-15**
10	16	2	11	23	16	**TLS16**	**TLSS16**
12	18	2	14	28	26	**TLS20-18**	**TLSS20-18**
12	20	2	14	28	21	**TLS20**	**TLSS20**
16	22	2	16	34	33	**TLS25-22**	**TLSS25-22**
16	25	2	16	34	30	**TLS25**	**TLSS25**
20	28	2	16	41	41	**TLS32-28**	**TLSS32-28**
20	30	2	16	41	42	**TLS32-30**	**TLSS32-30**
20	32	2	16	41	40	**TLS32**	**TLSS32**
24	35	2	16	49	48	**TLS38-35**	**TLSS38-35**
24	38	2	16	49	63	**TLS38**	**TLSS38**

Part numbers shown are part of our current manufacturing programme.
Do not create drawings from these dimensions, they are subject to change and ISO manufacturing allowances.

TL* Braze sleeve inch tubing

O-Lok® ORFS silver braze tube sleeve
SAE 520115
(*Parts delivered oil dipped finish only – steel)

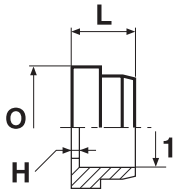

Tube O.D. 1 in.	H mm	L mm	O mm	Weight (steel) g/1 piece	O-Lok® Steel	O-Lok® Stainless Steel
1/4	1	10	13	5	**4 TL-S**	**4 TL-SS**
3/8	1	10	16	6	**6 TL-S**	**6 TL-SS**
1/2	1	10	19	10	**8 TL-S**	**8 TL-SS**
5/8	2	11	23	18	**10 TL-S**	**10 TL-SS**
3/4	2	14	28	26	**12 TL-S**	**12 TL-SS**
1	2	16	34	33	**16 TL-S**	**16 TL-SS**
1 1/4	2	16	41	42	**20 TL-S**	**20 TL-SS**
1 1/2	2	16	49	63	**24 TL-S**	**24 TL-SS**
2	2	17	61	210	**32 TL-S**	**32 TL-SS**

Part numbers shown are part of our current manufacturing programme.
Do not create drawings from these dimensions, they are subject to change and ISO manufacturing allowances.

TL* Reducing braze sleeve inch tubing

O-Lok® ORFS silver braze tube sleeve
SAE 520115
(*Parts delivered oil dipped finish only – steel)

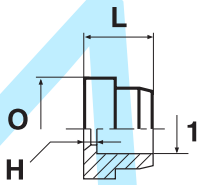

ORFS dash size	Tube O.D. 1 in.	H mm	L mm	O mm	Weight (Steel) g/1 piece	O-Lok® Steel	O-Lok® Stainless Steel
6	1/4	2	10	16	10	**6-4 TL-S**	**6-4 TL-SS**
8	1/4	4	12	19	17	**8-4 TL-S**	**8-4 TL-SS**
8	3/8	4	12	19	17	**8-6 TL-S**	**8-6 TL-SS**
10	1/4	5	14	23	37	**10-4 TL-S**	**10-4 TL-SS**
10	3/8	5	14	23	32	**10-6 TL-S**	**10-6 TL-SS**
10	1/2	5	14	23	28	**10-8 TL-S**	**10-8 TL-SS**
12	1/4	6	15	28	54	**12-4 TL-S**	**12-4 TL-SS**
12	3/8	6	15	28	49	**12-6 TL-S**	**12-6 TL-SS**
12	1/2	6	15	28	44	**12-8 TL-S**	**12-8 TL-SS**
12	5/8	6	15	28	39	**12-10 TL-S**	**12-10 TL-SS**
16	1/2	7	16	34	76	**16-8 TL-S**	**16-8 TL-SS**
16	5/8	7	16	34	71	**16-10 TL-S**	**16-10 TL-SS**
16	3/4	5	17	34	66	**16-12 TL-S**	**16-12 TL-SS**
16	7/8	5	17	34	50	**16-14 TL-S**	**16-14 TL-SS**
20	3/4	7	20	41	102	**20-12 TL-S**	**20-12 TL-SS**
20	1	7	21	41	79	**20-16 TL-S**	**20-16 TL-SS**
24	1	7	21	49	141	**24-16 TL-S**	**24-16 TL-SS**
24	1 1/4	7	21	49	107	**24-20 TL-S**	**24-20 TL-SS**

Part numbers shown are part of our current manufacturing programme.
Do not create drawings from these dimensions, they are subject to change and ISO manufacturing allowances.

Kovaz.cz

HMLO Union

O-Lok® ORFS tube ends
SAE 520101

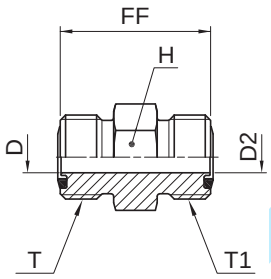

Tube 1 O.D. mm	Tube 1 O.D. in.	Tube 2 O.D. mm	Tube 2 O.D. in.	Thread UN/UNF-2A T	Thread UN/UNF-2A T1	D mm	D2 mm	FF mm	H mm	Weight (steel) g/1 piece	O-Lok® Steel	O-Lok® Stainless Steel	PN (bar) S	PN (bar) SS
6	1/4	6	1/4	9/16-18	9/16-18	4.5	4.5	28	17	31	**4HMLOS**	**4HMLOSS**	630	630
8, 10	5/16, 3/8	8, 10	5/16, 3/8	11/16-16	11/16-16	6.5	6.5	31	19	49	**6HMLOS**	**6HMLOSS**	630	630
10	3/8	6	1/4	11/16-16	9/16-18	6.5	4.5	30	19	45	**6-4HMLOS**	**6-4HMLOSS**	630	630
12	1/2	12	1/2	13/16-16	13/16-16	9.5	9.5	36	22	77	**8HMLOS**	**8HMLOSS**	630	630
12	1/2	10	3/8	13/16-16	11/16-16	9.5	6.5	34	22	67	**8-6 HLO-S**	**8-6HMLOSS**	630	630
14, 15, 16	5/8	10	3/8	1-14	11/16-16	12.5	6.5	38	27	113	**10-6HMLOS**	**10-6HMLOSS**	420	420
14, 15, 16	5/8	14, 15, 16	5/8	1-14	1-14	12.5	12.5	43	27	129	**10HMLOS**	**10HMLOSS**	420	420
16	5/8	12	1/2	1-14	13/16-16	12.5	9.5	40	27	112	**10-8 HLO-S**	**10-8HMLOSS**	420	420
18, 20	3/4	12	1/2	1 3/16-12	13/16-16	15.5	9.5	43	32	160	**12-8HMLOS**	**12-8HMLOSS**	420	420
18, 20	3/4	18, 20	3/4	1 3/16-12	1 3/16-12	15.5	15.5	47	32	204	**12HMLOS**	**12HMLOSS**	420	420
20	3/4	16	5/8	1 3/16-12	1-14	15.5	12.5	46	32	186	**12-10HMLOS**	**12-10HMLOSS**	420	420
22, 25	1	22, 25	1	1 7/16-12	1 7/16-12	20.5	20.5	49	41	291	**16HMLOS**	**16HMLOSS**	420	420
25	1	18, 20	3/4	1 7/16-12	1 3/16-12	20.5	15.5	49	41	285	**16-12HMLOS**	**16-12HMLOSS**	420	420
28, 30, 32	1 1/4	28, 30, 32	1 1/4	1 11/16-12	1 11/16-12	26.0	26.0	51	45	299	**20 HLO-S**	**20HMLOSS**	420	280
28, 30, 32	1 1/4	22, 25	1	1 11/16-12	1 7/16-12	26.0	20.5	52	46	280	**20-16HMLOS**	**20-16HMLOSS**	420	280
35, 38	1 1/2	35, 38	1 1/2	2-12	2-12	32.0	32.0	53	54	552	**24 HLO-S**	**24HMLOSS**	350	280
35, 38	1 1/2	28, 30, 32	1 1/4	2-12	1 11/16-12	32.0	26.0	53	55	530	**24-20HMLOS**	**24-20HMLOSS**	350	280
50	2	50	2	2 1/2-12	2 1/2-12	45.0	45.0	63	70	990	**32 HLO-S**	**32HMLOSS**	200	200

Product delivered with NBR TRAP seal. Replacement of TRAP seal is with a standard NBR O-ring – see page J73-J74.

Part numbers shown are part of our current manufacturing programme.

Imperial and metric parts may vary in hexagon dimensions.

$\frac{\text{PN (bar)}}{10} = \text{PN (MPa)}$

Do not create drawings from these dimensions, they are subject to change and ISO manufacturing allowances.

Kovalent

EMLO Union elbow

O-Lok® ORFS tube ends
SAE 520201

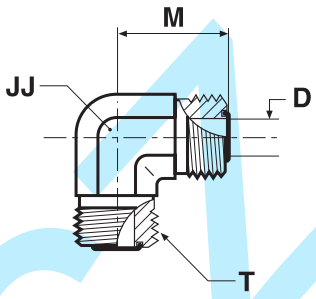

Tube O.D. mm	Tube O.D. in.	Thread UN/UNF-2A T	D mm	JJ* mm	M mm	Weight (steel) g/1 piece	O-Lok® Steel	O-Lok® Stainless Steel	PN (bar) S	PN (bar) SS
6	1/4	9/16-18	4.5	14	22	47	**4 ELO-S**	**4EMLOSS**	630	630
8, 10	5/16, 3/8	11/16-16	6.5	19	25	109	**6 ELO-S**	**6EMLOSS**	630	630
12	1/2	13/16-16	9.5	19	28	123	**8 ELO-S**	**8EMLOSS**	630	630
14, 15, 16	5/8	1-14	12.5	27	34	183	**10 ELO-S**	**10EMLOSS**	420	420
18, 20	3/4	1 3/16-12	15.5	30	38	255	**12 ELO-S**	**12EMLOSS**	420	420
22, 25	1	1 7/16-12	20.5	36	42	457	**16 ELO-S**	**16EMLOSS**	420	420
28, 30, 32	1 1/4	1 11/16-12	26.0	41	45	530	**20 ELO-S**	**20EMLOSS**	350	280
35, 38	1 1/2	2-12	32.0	48	49	687	**24 ELO-S**	**24EMLOSS**	280	280
50	2	2 1/2-12	45.0	64	70	1500	**32 ELO-S**		200	—

Product delivered with NBR TRAP seal. Replacement of TRAP seal is with a standard NBR O-ring – see page J73-J74.

Part numbers shown are part of our current manufacturing programme.

Imperial and metric parts may vary in hexagon dimensions.

$$\frac{\text{PN (bar)}}{10} = \text{PN (MPa)}$$

Do not create drawings from these dimensions, they are subject to change and ISO manufacturing allowances.
*JJ may vary in stainless steel

kovaz.cz

JMLO Union tee

O-Lok® ORFS tube ends
SAE 520401

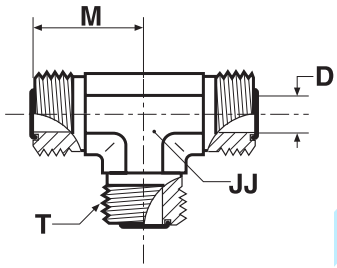

Tube O.D. mm	Tube O.D. in.	Thread UN/UNF-2A T	D mm	JJ* mm	M mm	Weight (steel) g/1 piece	O-Lok® Steel	O-Lok® Stainless Steel	PN (bar) S	PN (bar) SS
6	1/4	9/16-18	4.5	14	22	66	**4JMLOS**	**4JMLOSS**	630	630
8, 10	5/16, 3/8	11/16-16	6.5	19	25	114	**6JMLOS**	**6JMLOSS**	630	630
12	1/2	13/16-16	9.5	19	28	199	**8JMLOS**	**8JMLOSS**	630	630
14, 15, 16	5/8	1-14	12.5	27	34	239	**10 JLO-S**	**10JMLOSS**	420	420
18, 20	3/4	1 3/16-12	15.5	30	38	321	**12 JLO-S**	**12JMLOSS**	420	420
22, 25	1	1 7/16-12	20.5	36	42	488	**16 JLO-S**	**16JMLOSS**	420	420
28, 30, 32	1 1/4	1 11/16-12	26.0	41	45	768	**20 JLO-S**	**20JMLOSS**	350	280
35, 38	1 1/2	2-12	32.0	48	49	866	**24 JLO-S**	**24JMLOSS**	280	280
50	2	2 1/2-12	45.0	64	70	2250	**32 JLO-S**	**32JMLOSS**	200	200

Product delivered with NBR TRAP seal. Replacement of TRAP seal is with a standard NBR O-ring – see page J73-J74.

Part numbers shown are part of our current manufacturing programme.

Imperial and metric parts may vary in hexagon dimensions.

$\frac{\text{PN (bar)}}{10}$ = PN (MPa)

Do not create drawings from these dimensions, they are subject to change and ISO manufacturing allowances.
*JJ may vary in stainless steel

kovaz.si

KLO Union cross

O-Lok® ORFS tube ends
SAE 520501

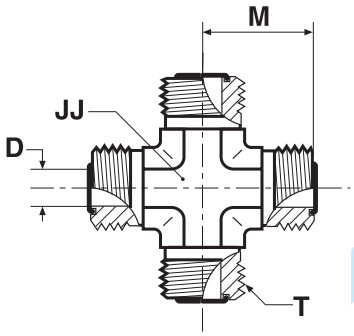

Tube O.D. mm	Tube O.D. in.	Thread UN/UNF-2A T	D mm	JJ* mm	M mm	Weight (steel) g/1 piece	O-Lok® Steel	O-Lok® Stainless Steel	PN (bar) S	PN (bar) SS
6	1/4	9/16-18	4.5	14	22	72	**4 KLO-S**	**4 KLO-SS**	630	630
8, 10	5/16, 3/8	11/16-16	6.5	19	25	140	**6 KLO-S**	**6 KLO-SS**	630	630
12	1/2	13/16-16	9.5	19	28	225	**8 KLO-S**	**8 KLO-SS**	630	630
14, 15, 16	5/8	1-14	12.5	27	33	288	**10 KLO-S**	**10 KLO-SS**	420	420
18, 20	3/4	1 3/16-12	15.5	30	37	415	**12 KLO-S**	**12 KLO-SS**	420	420
22, 25	1	1 7/16-12	20.5	41	42	967	**16 KLO-S**	**16 KLO-SS**	420	420
28, 30, 32	1 1/4	1 11/16-12	26.0	41	45	1247	**20 KLO-S**	**20 KLO-SS**	350	280
35, 38	1 1/2	2-12	32.0	48	49	1592	**24 KLO-S**	**24 KLO-SS**	280	280

Product delivered with NBR TRAP seal. Replacement of TRAP seal is with a standard NBR O-ring – see page J73-J74.

Part numbers shown are part of our current manufacturing programme.

Imperial and metric parts may vary in hexagon dimensions.

$\frac{\text{PN (bar)}}{10} = \text{PN (MPa)}$

Do not create drawings from these dimensions, they are subject to change and ISO manufacturing allowances.
*JJ may vary in stainless steel

WMLO Bulkhead union

O-Lok® ORFS tube ends
SAE 520601 ISO 8434-3 BHS

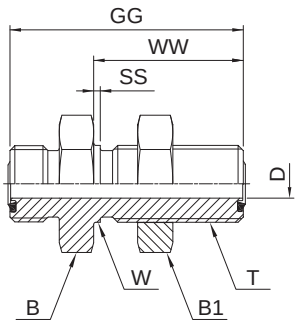

Tube O.D. mm	Tube O.D. in.	Thread UN/UNF-2A T	B1 mm	B mm	D mm	GG mm	SS mm	W mm	WW mm	Weight (steel) g/1 piece	O-Lok® Steel	O-Lok® Stainless Steel	PN (bar) S	PN (bar) SS
6	1/4	9/16-18	20.6	21	4.5	48	2	14	32	65	**4 WLO-WLNL-S**	**4WMLOWLNMLSS**	630	630
8, 10	5/16, 3/8	11/16-16	27.0	27	6.5	53	2	17	34	104	**6WMLOWLNMLS**	**6WMLOWLNMLSS**	630	630
12	1/2	13/16-16	30.0	30	9.5	59	3	21	37	141	**8WMLOWLNMLS**	**8WMLOWLNMLSS**	630	630
14, 15, 16	5/8	1-14	36.0	32	12.5	67	3	25	41	285	**10WMLOWLNMLS**	**10WMLOWLNMLSS**	420	420
18, 20	3/4	1 3/16-12	41.0	41	15.5	69	3	30	42	322	**12WMLOWLNMLS**	**12WMLOWLNMLSS**	420	420
22, 25	1	1 7/16-12	44.5	45	20.5	70	2	36	42	480	**16 WLO-WLNL-S**	**16WMLOWLNMLSS**	420	420
28, 30, 32	1 1/4	1 11/16-12	50.4	51	26.0	70	2	43	42	510	**20 WLO-WLNL-S**	**20WMLOWLNMLSS**	420	280
35, 38	1 1/2	2-12	60.3	60	32.0	70	2	51	42	674	**24 WLO-WLNL-S**	**24WMLOWLNMLSS**	350	280

Product delivered with NBR TRAP seal. Replacement of TRAP seal is with a standard NBR O-ring – see page J73-J74.

Part numbers shown are part of our current manufacturing programme.

Imperial and metric parts may vary in hexagon dimensions.

For the version without the locknut remove “WLNML” (e.g. 16WMLO)

$$\frac{\text{PN (bar)}}{10} = \text{PN (MPa)}$$

Do not create drawings from these dimensions, they are subject to change and ISO manufacturing allowances.

Maximum bulkhead wallthickness

Size	Tube O.D. inch	Tube O.D. metric	Straight bulkhead union Max. thickness mm	Shape bulkhead union Max. thickness mm
4	1/4	6	13.5	13.5
6	3/8	10	13.5	13.5
8	1/2	12	13.5	13.5
10	5/8	14–16	13.2	13.2
12	3/4	18–20	12.7	12.7
16	1	22–25	13.0	13.0
20	1 1/4	28–32	13.0	13.0
24	1 1/2	35–38	13.0	13.0

WEMLO Bulkhead union elbow

O-Lok® ORFS tube end/O-Lok® ORFS tube end
SAE520701/SAE 520701 ISO 8434-3 BHE

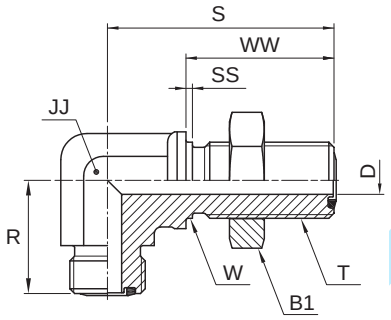

Tube O.D. mm	Tube O.D. in.	Thread UN/UNF-2A T	B1 mm	D mm	JJ* mm	R mm	S mm	SS mm	W mm	WW mm	Weight (steel) g/1 piece	O-Lok® Steel	O-Lok® Stainless Steel	PN (bar) S	PN (bar) SS
6	1/4	9/16-18	20.6	4.5	14	23	47	2	14	32	78	**4 WELO-WLNL-S**	**4 WELO-WLNL-SS**	630	630
8, 10	5/16, 3/8	11/16-16	27.0	6.5	19	26	52	2	17	34	146	**6WEMLOWLNMLS**	**6 WELO-WLNL-SS**	630	630
12	1/2	13/16-16	30.0	9.5	19	29	56	3	21	37	252	**8WEMLOWLNMLS**	**8 WELO-WLNL-SS**	630	630
14, 15, 16	5/8	1-14	36.0	12.5	27	35	63	3	25	41	287	**10WEMLOWLNMLS**	**10 WELO-WLNL-SS**	420	420
18, 20	3/4	1 3/16-12	38.0	15.5	30	39	67	2	30	42	445	**12 WELO-WLNL-S**	**12 WELO-WLNL-SS**	420	420
22, 25	1	1 7/16-12	44.5	20.5	36	42	71	2	37	42	639	**16 WELO-WLNL-S**	**16 WELO-WLNL-SS**	420	420
28, 30, 32	1 1/4	1 11/16-12	50.4	26.0	41	46	75	2	43	42	718	**20 WELO-WLNL-S**	**20 WELO-WLNL-SS**	350	280
35, 38	1 1/2	2-12	60.3	32.0	48	50	80	2	51	42	945	**24 WELO-WLNL-S**	**24 WELO-WLNL-SS**	280	280

Product delivered with NBR TRAP seal. Replacement of TRAP seal is with a standard NBR O-ring – see page J73-J74.

Part numbers shown are part of our current manufacturing programme.

Imperial and metric parts may vary in hexagon dimensions.

For the version without the locknut remove “WLNML” (e.g. 16WEMLO)

$$\frac{\text{PN (bar)}}{10} = \text{PN (MPa)}$$

Do not create drawings from these dimensions, they are subject to change and ISO manufacturing allowances.
*JJ may vary in stainless steel

Maximum bulkhead wallthickness

Size	Tube O.D. inch	Tube O.D. metric	Straight bulkhead union Max. thickness mm	Shape bulkhead union Max. thickness mm
4	1/4	6	13.5	13.5
6	3/8	10	13.5	13.5
8	1/2	12	13.5	13.5
10	5/8	14–16	13.2	13.2
12	3/4	18–20	12.7	12.7
16	1	22–25	13.0	13.0
20	1 1/4	28–32	13.0	13.0
24	1 1/2	35–38	13.0	13.0

WNLO Bulkhead union 45° elbow

O-Lok® ORFS tube ends
SAE 520801 ISO 8434-3 BHE 45

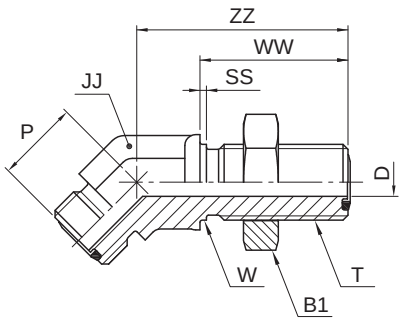

Tube O.D. mm	Tube O.D. in.	Thread UN/UNF-2A T	B1 mm	D mm	JJ* mm	P mm	SS mm	W mm	WW mm	ZZ mm	Weight (steel) g/1 piece	O-Lok® Steel	PN (bar)
6	1/4	9/16-18	20.6	4.5	14	16	2	14	32	44	65	**4 WNLO-WLNL-S**	630
8, 10	5/16, 3/8	11/16-16	25.4	6.5	19	19	2	17	34	49	123	**6 WNLO-WLNL-S**	630
12	1/2	13/16-16	28.6	9.5	19	21	2	21	37	51	163	**8 WNLO-WLNL-S**	630
14, 15, 16	5/8	1-14	33.3	12.5	27	24	2	25	41	57	252	**10 WNLO-WLNL-S**	420
18, 20	3/4	1 3/16-12	38.0	15.5	30	26	2	30	42	61	386	**12 WNLO-WLNL-S**	420
22, 25	1	1 7/16-12	44.5	20.5	36	30	2	37	42	65	465	**16 WNLO-WLNL-S**	420
28, 30, 32	1 1/4	1 11/16-12	50.4	26.0	41	32	2	43	42	67	578	**20 WNLO-WLNL-S**	350
35, 38	1 1/2	2-12	60.3	32.0	48	37	2	51	42	67	770	**24 WNLO-WLNL-S**	280

Product delivered with NBR TRAP seal. Replacement of TRAP seal is with a standard NBR O-ring – see page J73-J74.

Part numbers shown are part of our current manufacturing programme.

Imperial and metric parts may vary in hexagon dimensions.

For the version without the locknut remove “WLNL” (e.g. 16 WNLO)

$$\frac{\text{PN (bar)}}{10} = \text{PN (MPa)}$$

Do not create drawings from these dimensions, they are subject to change and ISO manufacturing allowances.
*JJ may vary in stainless steel

Maximum bulkhead wallthickness

Size	Tube O.D. inch	Tube O.D. metric	Straight bulkhead union Max. thickness mm	Shape bulkhead union Max. thickness mm
4	1/4	6	13.5	13.5
6	3/8	10	13.5	13.5
8	1/2	12	13.5	13.5
10	5/8	14–16	13.2	13.2
12	3/4	18–20	12.7	12.7
16	1	22–25	13.0	13.0
20	1 1/4	28–32	13.0	13.0
24	1 1/2	35–38	13.0	13.0

WJLO Bulkhead branch tee

O-Lok® ORFS tube ends

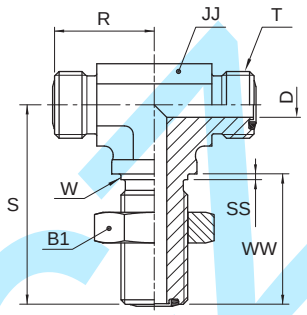

Tube O.D. mm	Tube O.D. in.	Thread UN/UNF-2A T	B1 mm	D mm	JJ* mm	R mm	S mm	SS mm	W mm	WW mm	Weight (steel) g/1 piece	O-Lok® Steel	PN (bar)
6	1/4	9/16-18	20.6	4.5	14	23	47	2	14	32	100	**4 WJLO-WLNL-S**	630
8, 10	5/16, 3/8	11/16-16	25.4	6.5	19	26	52	2	18	34	178	**6 WJLO-WLNL-S**	630
12	1/2	13/16-16	28.6	9.5	19	29	55	2	21	37	270	**8 WJLO-WLNL-S**	630
14, 15, 16	5/8	1-14	33.3	12.5	27	35	63	2	25	41	370	**10 WJLO-WLNL-S**	420
18, 20	3/4	1 3/16-12	38.0	15.5	30	39	67	2	30	42	520	**12 WJLO-WLNL-S**	420
22, 25	1	1 7/16-12	44.5	20.5	36	42	71	2	37	42	680	**16 WJLO-WLNL-S**	420

Product delivered with NBR TRAP seal. Replacement of TRAP seal is with a standard NBR O-ring – see page J73-J74.

Part numbers shown are part of our current manufacturing programme.

Imperial and metric parts may vary in hexagon dimensions.

For the version without the locknut remove “WLNL” (e.g. 16 WJLO)

$$\frac{\text{PN (bar)}}{10} = \text{PN (MPa)}$$

Do not create drawings from these dimensions, they are subject to change and ISO manufacturing allowances.
*JJ may vary in stainless steel

Maximum bulkhead wallthickness

Size	Tube O.D. inch	Tube O.D. metric	Straight bulkhead union Max. thickness mm	Shape bulkhead union Max. thickness mm
4	1/4	6	13.5	13.5
6	3/8	10	13.5	13.5
8	1/2	12	13.5	13.5
10	5/8	14–16	13.2	13.2
12	3/4	18–20	12.7	12.7
16	1	22–25	13.0	13.0
20	1 1/4	28–32	13.0	13.0
24	1 1/2	35–38	13.0	13.0

WJJLO Bulkhead run tee

O-Lok® ORFS tube ends
SAE 520958 ISO 8434-3 BHRT

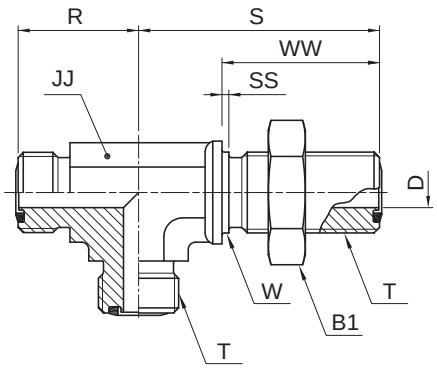

Tube O.D. mm	Tube O.D. in.	Thread UN/UNF-2A T	B1 mm	D mm	JJ* mm	R mm	S mm	SS mm	W mm	WW mm	Weight (steel) g/1 piece	O-Lok® Steel	PN (bar)
6	1/4	9/16-18	20.6	4.5	14	23	46	2	14	32	99	**4 WJJLO-WLNL-S**	630
8, 10	5/16, 3/8	11/16-16	25.4	6.5	19	26	52	2	17	34	178	**6 WJJLO-WLNL-S**	630
12	1/2	13/16-16	28.6	9.5	19	29	55	2	21	37	270	**8 WJJLO-WLNL-S**	630
14, 15, 16	5/8	1-14	33.3	12.5	27	35	63	2	25	41	368	**10 WJJLO-WLNL-S**	420
18, 20	3/4	1 3/16-12	38.0	15.5	30	39	67	2	30	42	516	**12 WJJLO-WLNL-S**	420
22, 25	1	1 7/16-12	44.5	20.5	36	42	71	2	37	42	678	**16 WJJLO-WLNL-S**	420
28, 30, 32	1 1/4	1 11/16-12	50.4	26.0	41	46	71	2	43	42	980	**20 WJJLO-WLNL-S**	350
35, 38	1 1/2	2-12	60.3	32.0	48	50	80	2	51	42	1900	**24 WJJLO-WLNL-S**	280

Product delivered with NBR TRAP seal. Replacement of TRAP seal is with a standard NBR O-ring – see page J73-J74.

Part numbers shown are part of our current manufacturing programme.

Imperial and metric parts may vary in hexagon dimensions.

For the version without the locknut remove “WLNL” (e.g. 16 WJJLO)

$$\frac{\text{PN (bar)}}{10} = \text{PN (MPa)}$$

Do not create drawings from these dimensions, they are subject to change and ISO manufacturing allowances.
*JJ may vary in stainless steel

Maximum bulkhead wallthickness

Size	Tube O.D. inch	Tube O.D. metric	Straight bulkhead union Max. thickness mm	Shape bulkhead union Max. thickness mm
4	1/4	6	13.5	13.5
6	3/8	10	13.5	13.5
8	1/2	12	13.5	13.5
10	5/8	14–16	13.2	13.2
12	3/4	18–20	12.7	12.7
16	1	22–25	13.0	13.0
20	1 1/4	28–32	13.0	13.0
24	1 1/2	35–38	13.0	13.0

AOEL6 Swivel nut stud elbow

O-Lok® ORFS Female swivel end / Male UN/UNF thread – O-ring (ISO 11926)
SAE 520281

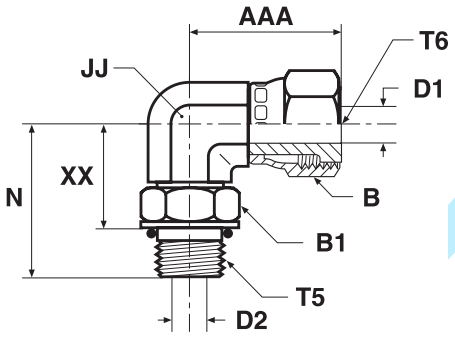

Tube O.D. mm	Tube O.D. in.	Thread UN/UNF-2A T5	Thread UN/UNF-2B T6	AAA mm	B mm	B1 mm	D1 mm	D2 mm	JJ* mm	N mm	XX mm	Weight (steel) g/1 piece	O-Lok® Steel	O-Lok® Stainless Steel	PN (bar) S	PN (bar) SS
6	1/4	7/16-20	9/16-18	26	18	14	4.0	4.5	14	33	22	47	**4 AOEL6-S**	**4 AOEL6-SS**	420	420
8, 10	5/16, 3/8	9/16-18	11/16-16	30	21	19	6.5	7.5	19	37	25	97	**6 AOEL6-S**	**6 AOEL6-SS**	420	420
12	1/2	3/4-16	13/16-16	38	24	24	9.0	10.0	19	41	27	104	**8 AOEL6-S**	**8 AOEL6-SS**	420	420
14, 15, 16	5/8	7/8-14	1-14	42	29	27	11.5	12.5	27	50	34	199	**10 AOEL6-S**	**10 AOEL6-SS**	420	420
18, 20	3/4	1 1/16-12	1 3/16-12	46	35	35	14.0	15.5	27	55	37	162	**12 AOEL6-S**	**12 AOEL6-SS**	420	420
22, 25	1	1 5/16-12	1 7/16-12	53	41	41	20.0	21.5	33	60	42	365	**16 AOEL6-S**	**16 AOEL6-SS**	380	380
28, 30, 32	1 1/4	1 5/8-12	1 11/16-12	58	48	48	26.0	27.5	41	62	44	480	**20 AOEL6-S**	**20 AOEL6-SS**	280	280
35, 38	1 1/2	1 7/8-12	2-12	61	57	54	32.0	33.5	50	66	47	933	**24 AOEL6-S**	**24 AOEL6-SS**	280	280

O-Lok® is delivered with NBR elastomeric seals as standard. For more details on other seal materials see page J73-J74.

Part numbers shown are part of our current manufacturing programme.

Imperial and metric parts may vary in hexagon dimensions.

$\frac{\text{PN (bar)}}{10}$ = PN (MPa)

Do not create drawings from these dimensions, they are subject to change and ISO manufacturing allowances.
*JJ may vary in stainless steel

Kovaz

C6MLO Swivel nut elbow

O-Lok® ORFS Female swivel end / O-Lok® ORFS tube end
SAE 52M0221 ISO 8434-3 SWE

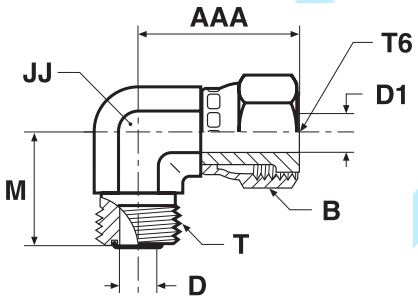

Tube O.D. mm	Tube O.D. in.	Thread UN/UNF-2A T	Thread UN/UNF-2B T6	AAA mm	B mm	D mm	D1 mm	JJ* mm	M mm	Weight (steel) g/1 piece	O-Lok® Steel	O-Lok® Stainless Steel	PN (bar) S	PN (bar) SS
6	1/4	9/16-18	9/16-18	26	17	4.5	4.0	14	22	45	**4C6MLOS**	**4C6MLOSS**	500	420
8, 10	5/16, 3/8	11/16-16	11/16-16	29	22	6.5	6.5	19	25	84	**6C6MLOS**	**6C6MLOSS**	630	420
12	1/2	13/16-16	13/16-16	38	24	9.5	9.0	19	28	126	**8C6MLOS**	**8C6MLOSS**	630	420
14, 15, 16	5/8	1-14	1-14	41	30	12.5	11.5	27	33	221	**10C6MLOS**	**10C6MLOSS**	420	420
18, 20	3/4	1 3/16-12	1 3/16-12	46	36	15.5	14.0	30	37	284	**12C6MLOS**	**12C6MLOSS**	420	420
22, 25	1	1 7/16-12	1 7/16-12	53	41	20.5	20.0	36	42	541	**16C6MLOS**	**16C6MLOSS**	420	420
28, 30, 32	1 1/4	1 11/16-12	1 11/16-12	58	48	26.0	26.0	41	45	557	**20 C6LO-S**	**20C6MLOSS**	350	280
35, 38	1 1/2	2-12	2-12	61	57	32.0	32.0	48	49	706	**24 C6LO-S**	**24C6MLOSS**	280	280

Product delivered with NBR TRAP seal. Replacement of TRAP seal is with a standard NBR O-ring – see page J73-J74.

Part numbers shown are part of our current manufacturing programme.

Imperial and metric parts may vary in hexagon dimensions.

$\frac{\text{PN (bar)}}{10}$ = PN (MPa)

Do not create drawings from these dimensions, they are subject to change and ISO manufacturing allowances.
*JJ may vary in stainless steel

V6LO 45° Swivel nut elbow

O-Lok® ORFS female swivel end / O-Lok® ORFS tube end

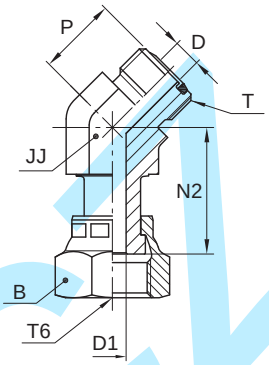

*JJ – Across wrench flats

Tube O.D. mm	Tube O.D. in.	Thread UN/UNF-2A T	Thread UN/UNF-2B T6	B mm	D mm	D1 mm	JJ* mm	N2 mm	P mm	Weight (steel) g/1 piece	O-Lok® Steel	PN (bar)
6	1/4	9/16-18	9/16-18	18	4.5	4.0	14	25	16	44	**4 V6LO-S**	500
8, 10	5/16, 3/8	11/16-16	11/16-16	22	6.5	6.5	19	30	19	96	**6V6MLOS**	630
12	1/2	13/16-16	13/16-16	24	9.5	9.0	19	38	20	110	**8 V6LO-S**	630
14, 15, 16	5/8	1-14	1-14	30	12.5	11.5	27	42	23	235	**10V6MLOS**	420
18, 20	3/4	1 3/16-12	1 3/16-12	36	15.5	14.0	30	46	26	349	**12V6MLOS**	420
22, 25	1	1 7/16-12	1 7/16-12	41	20.5	20.0	36	48	30	300	**16 V6LO-S**	420
28, 30, 32	1 1/4	1 11/16-12	1 11/16-12	48	26.0	26.0	41	50	32	444	**20 V6LO-S**	350
35, 38	1 1/2	2-12	2-12	57	32.0	32.0	48	52	37	568	**24 V6LO-S**	280

Product delivered with NBR TRAP seal. Replacement of TRAP seal is with a standard NBR O-ring – see page J73-J74.

Part numbers shown are part of our current manufacturing programme.

Imperial and metric parts may vary in hexagon dimensions.

$\frac{\text{PN (bar)}}{10}$ = PN (MPa)

Do not create drawings from these dimensions, they are subject to change and ISO manufacturing allowances.
*JJ may vary in stainless steel

Kovaz.cz

S6MLO Swivel nut branch tee

O-Lok® ORFS female swivel end / O-Lok® ORFS tube ends
SAE 52M0433 ISO 8434-3 SWBT

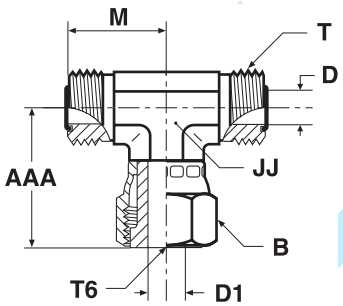

Tube O.D. mm	Tube O.D. in.	Thread UN/UNF-2A T	Thread UN/UNF-2B T6	AAA mm	B mm	D mm	D1 mm	JJ* mm	M mm	Weight (steel) g/1 piece	O-Lok® Steel	O-Lok® Stainless Steel	PN (bar) S	PN (bar) SS
6	1/4	9/16-18	9/16-18	26	17	4.5	4.0	14	22	66	**4S6MLOS**	**4S6MLOSS**	500	420
8, 10	5/16, 3/8	11/16-16	11/16-16	29	22	6.5	6.5	19	25	125	**6S6MLOS**	**6S6MLOSS**	630	420
12	1/2	13/16-16	13/16-16	38	24	9.5	9.0	19	28	150	**8S6MLOS**	**8S6MLOSS**	630	420
14, 15, 16	5/8	1-14	1-14	41	30	12.5	11.5	27	33	233	**10S6MLOS**	**10S6MLOSS**	420	420
18, 20	3/4	1 3/16-12	1 3/16-12	47	35	15.5	14.0	30	38	383	**12 S6LO-S**	**12S6MLOSS**	420	420
22, 25	1	1 7/16-12	1 7/16-12	54	41	20.5	20.0	36	42	518	**16 S6LO-S**	**16S6MLOSS**	420	420
28, 30, 32	1 1/4	1 11/16-12	1 11/16-12	58	48	26.0	26.0	41	45	775	**20 S6LO-S**	**20S6MLOSS**	350	280
35, 38	1 1/2	2-12	2-12	61	57	32.0	32.0	48	49	933	**24 S6LO-S**	**24S6MLOSS**	280	280

Product delivered with NBR TRAP seal. Replacement of TRAP seal is with a standard NBR O-ring – see page J73-J74.

Part numbers shown are part of our current manufacturing programme.

Imperial and metric parts may vary in hexagon dimensions.

$\frac{\text{PN (bar)}}{10}$ = PN (MPa)

Do not create drawings from these dimensions, they are subject to change and ISO manufacturing allowances.
*JJ may vary in stainless steel

Kovaz

R6MLO Swivel nut run tee

O-Lok® ORFS female swivel end / O-Lok® ORFS tube ends
SAE 52M0432 ISO 8434-3 SWRT

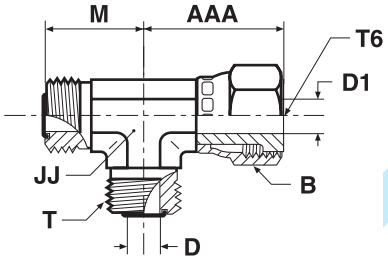

Tube O.D. mm	Tube O.D. in.	Thread UN/UNF-2A T	Thread UN/UNF-2B T6	AAA mm	B mm	D mm	D1 mm	JJ* mm	M mm	Weight (steel) g/1 piece	O-Lok® Steel	O-Lok® Stainless Steel	PN (bar) S	PN (bar) SS
6	1/4	9/16-18	9/16-18	26	17	4.5	4.0	14	22	66	**4R6MLOS**	**4R6MLOSS**	500	420
8, 10	5/16, 3/8	11/16-16	11/16-16	29	22	6.5	6.5	19	25	125	**6R6MLOS**	**6R6MLOSS**	630	420
12	1/2	13/16-16	13/16-16	38	24	9.5	9.0	19	28	150	**8R6MLOS**	**8R6MLOSS**	630	420
14, 15, 16	5/8	1-14	1-14	41	30	12.5	11.5	27	33	233	**10R6MLOS**	**10R6MLOSS**	420	420
18, 20	3/4	1 3/16-12	1 3/16-12	47	35	15.5	14.0	30	38	383	**12 R6LO-S**	**12R6MLOSS**	420	420
22, 25	1	1 7/16-12	1 7/16-12	54	41	20.5	20.0	36	42	518	**16 R6LO-S**	**16R6MLOSS**	420	420
28, 30, 32	1 1/4	1 11/16-12	1 11/16-12	58	48	26.0	26.0	41	45	775	**20 R6LO-S**	**20R6MLOSS**	350	280
35, 38	1 1/2	2-12	2-12	61	57	32.0	32.0	48	49	933	**24 R6LO-S**	**24R6MLOSS**	280	280

Product delivered with NBR TRAP seal. Replacement of TRAP seal is with a standard NBR O-ring – see page J73-J74.

Part numbers shown are part of our current manufacturing programme.

Imperial and metric parts may vary in hexagon dimensions.

$\frac{\text{PN (bar)}}{10}$ = PN (MPa)

Do not create drawings from these dimensions, they are subject to change and ISO manufacturing allowances.
*JJ may vary in stainless steel

Kovaz

TRMLO Tube end reducer

O-Lok® ORFS tube end / O-Lok® ORFS swivel female end
SAE 520123 /A

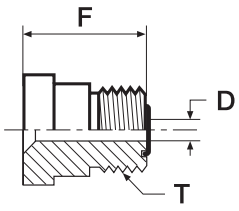

Form A

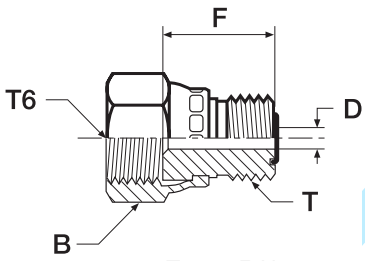

Form B**

* For Form A, a BL- or BML-nut is required
(to be ordered separately)

Tube O.D. mm	Tube O.D. in.	Thread UN/UNF-2A T	Thread UN/UNF-2B T6	B mm	D mm	F mm	Weight (steel) g/1 piece	Form	O-Lok® Steel	O-Lok® Stainless Steel	PN (bar) S	PN (bar) SS
10	3/8	9/16-18	11/16-16	22	4.5	20	21	B	**6-4TRMLONS**	**6-4TRMLONSS**	630	420
12	1/2	9/16-18	—	—	4.5	22	30	A	**8-4 TRLO-S**	**8-4TRMLOSS**	630	420
12	1/2	11/16-16	13/16-16	24	6.5	22	33	B	**8-6TRMLONS**	**8-6TRMLONSS**	630	420
16	5/8	9/16-18	—	—	4.5	23	37	A	**10-4 TRLO-S**	**10-4TRMLOSS**	420	420
16	5/8	11/16-16	—	—	6.5	24	48	A	**10-6 TRLO-S**	**10-6TRMLOSS**	420	420
16	5/8	13/16-16	—	—	9.5	26	50	A	**10-8 TRLO-S**	**10-8TRMLOSS**	420	420
20	3/4	9/16-18	—	—	4.5	25	63	A	**12-4 TRLO-S**	**12-4TRMLOSS**	420	420
20	3/4	11/16-16	—	—	6.5	26	66	A	**12-6 TRLO-S**	**12-6TRMLOSS**	420	420
20	3/4	13/16-16	—	—	9.5	28	71	A	**12-8 TRLO-S**	**12-8TRMLOSS**	420	420
20	3/4	1-14	1 3/16-12	36	12.5	30	85	B	**12-10TRMLONS**	**12-10TRMLONSS**	420	420
25	1	13/16-16	—	—	9.5	29	103	A	**16-8 TRLO-S**	**16-8TRMLOSS**	420	420
25	1	1-14	—	—	12.5	32	118	A	**16-10 TRLO-S**	**16-10TRMLOSS**	420	420
25	1	1 3/16-12	1 7/16-12	41	15.5	33	133	B	**16-12 TRLON-S**	**16-12TRMLONSS**	420	420
32	1 1/4	1-14	—	—	12.5	32	163	A	**20-10TRLOS**	**20-10TRMOLSS**	420	420
32	1 1/4	1 3/16-12	—	—	15.5	34	169	A	**20-12 TRLO-S**	**20-12TRMLOSS**	420	280
32	1 1/4	1 7/16-12	1 11/16-12	48	20.5	38	183	B	**20-16 TRLON-S**	**20-16TRMLONSS**	350	280
38	1 1/2	1 7/16-12	—	—	20.5	34	205	A	**24-16 TRLO-S**	**24-16TRMLOSS**	350	280
38	1 1/2	1 11/16-12	—	—	26.0	34	209	A	**24-20 TRLO-S**	**24-20TRMLOSS**	350	280
50	2	1 11/16-12	—	—	26.0	36	420	A	**32-20 TRLO-S**	**32-20TRMLOSS**	200	200
50	2	2-12	—	—	32.0	36	420	A	**32-24 TRLO-S**	**32-24TRMLOSS**	200	200

Product delivered with NBR TRAP seal. Replacement of TRAP seal is with a standard NBR O-ring – see page J73-J74.

Part numbers shown are part of our current manufacturing programme.

Imperial and metric parts may vary in hexagon dimensions.

$\frac{\text{PN (bar)}}{10}$ = PN (MPa)

Do not create drawings from these dimensions, they are subject to change and ISO manufacturing allowances.
**These size come assembled with a crimp style nut (Form B).

LOHL6 Tube end expander

O-Lok® ORFS tube end / O-Lok® ORFS female swivel end

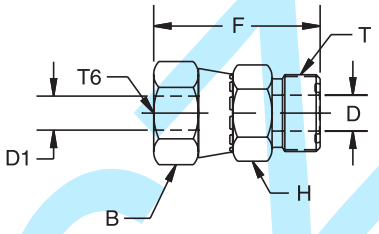

Tube O.D. mm	Tube O.D. in.	Thread UN/UNF-2A T	Thread UN/UNF-2B T6	B mm	D mm	D1 mm	H mm	F mm	Weight (steel) g/1 piece	O-Lok® Steel	PN (bar)
8, 10	5/16, 3/8	11/16-16	9/16-18	18	4.0	4.0	19	35	33	**6-4 LOHL6-S**	630
12	1/2	13/16-16	11/16-16	21	9.5	6.5	22	41	52	**8-6 LOHL6-S**	630
14, 15, 16	5/8	1-14	13/16-16	24	12.5	9.0	27	46	92	**10-8 LOHL6-S**	420
18, 20	3/4	1 3/16-12	1-14	29	15.5	11.5	32	51	146	**12-10 LOHL6-S**	420
22, 25	1	1 7/16-12	1 3/16-12	35	20.5	14.0	38	55	205	**16-12 LOHL6-S**	420
28, 30, 32	1 1/4	1 11/16-12	1 7/16-12	42	26.0	20.0	45	58	260	**20-16 LOHL6-S**	350
35, 38	1 1/2	2-12	1 11/16-12	48	32.0	26.0	54	60	315	**24-20 LOHL6-S**	280

Product delivered with NBR TRAP seal. Replacement of TRAP seal is with a standard NBR O-ring – see page J73-J74.

Part numbers shown are part of our current manufacturing programme.

Imperial and metric parts may vary in hexagon dimensions.

$$\frac{\text{PN (bar)}}{10} = \text{PN (MPa)}$$

Do not create drawings from these dimensions, they are subject to change and ISO manufacturing allowances.

kovaz.cz

HL6 Swivel nut union

O-Lok® ORFS female swivel ends

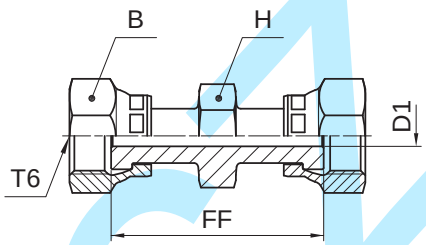

Tube O.D. mm	Tube O.D. in.	Thread UN/UNF-2B T6	B mm	D1 mm	FF mm	H mm	Weight (steel) g/1 piece	O-Lok® Steel	PN (bar)
6	1/4	9/16-18	18	4.0	40	16	53	**4 HL6-S**	500
8, 10	5/16, 3/8	11/16-16	21	6.5	45	19	66	**6 HL6-S**	630
12	1/2	13/16-16	24	9.0	54	22	110	**8 HL6-S**	630
14, 15, 16	5/8	1-14	29	11.5	62	27	173	**10 HL6-S**	420
18, 20	3/4	1 3/16-12	35	14.0	70	32	275	**12 HL6-S**	420
22, 25	1	1 7/16-12	41	20.0	75	37	499	**16 HL6-S**	420

Part numbers shown are part of our current manufacturing programme.

Imperial and metric parts may vary in hexagon dimensions.

$\frac{\text{PN (bar)}}{10}$ = PN (MPa)

Do not create drawings from these dimensions, they are subject to change and ISO manufacturing allowances.

J

kovaz.cz

F87OMLO Male stud connector

O-Lok® ORFS tube end / Male metric thread – O-ring (ISO 6149-2)
SAE 52M0187 ISO 8434-3 SDS

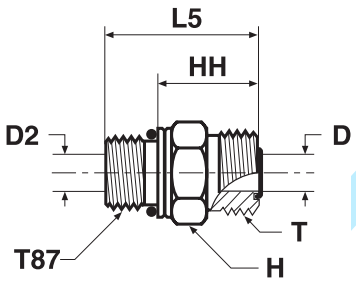

Tube O.D. mm	Tube O.D. in.	Thread metric T87	Thread UN/UNF-2A T	D mm	D2 mm	H mm	HH mm	L5 mm	Weight (steel) g/1 piece	O-Lok® Steel	O-Lok® Stainless Steel	PN (bar) S	PN (bar) SS
6	1/4	M 10×1.0	9/16-18	4.5	3.0	17	18	27	20	**4M10F87OMLOS**	**4M10F87OMLOSS**	630	630
6	1/4	M 12×1.5	9/16-18	4.5	4.0	17	18	29	24	**4M12F87OMLOS**	**4M12F87OMLOSS**	630	630
6	1/4	M 14×1.5	9/16-18	4.5	4.5	19	19	30	30	**4M14F87OMLOS**	**4M14F87OMLOSS**	630	630
6	1/4	M 16×1.5	9/16-18	4.5	7.0	22	20	33	35	**4M16F87OMLOS**	**4M16F87OMLOSS**	630	630
8, 10	5/16, 3/8	M 12×1.5	11/16-16	6.5	4.0	19	21	32	40	**6M12F87OMLOS**	**6M12F87OMLOSS**	630	630
8, 10	5/16, 3/8	M 14×1.5	11/16-16	6.5	6.0	19	21	32	43	**6M14F87OMLOS**	**6M14F87OMLOSS**	630	630
8, 10	5/16, 3/8	M 16×1.5	11/16-16	6.5	6.5	22	21	34	43	**6M16F87OMLOS**	**6M16F87OMLOSS**	630	630
8, 10	5/16, 3/8	M 18×1.5	11/16-16	6.5	9.0	24	22	36	45	**6M18F87OMLOS**	**6M18F87OMLOSS**	630	630
8, 10	5/16, 3/8	M 22×1.5	11/16-16	6.5	6.5	27	23	38	52	**6M22F87OMLOS**	**6M22F87OMLOSS**	420	420
12	1/2	M 14×1.5	13/16-16	9.5	6.0	22	24	35	40	**8M14F87OMLOS**	**8M14F87OMLOSS**	630	630
12	1/2	M 16×1.5	13/16-16	9.5	7.0	22	24	37	58	**8M16F87OMLOS**	**8M16F87OMLOSS**	630	630
12	1/2	M 18×1.5	13/16-16	9.5	9.0	24	24	38	55	**8M18F87OMLOS**	**8M18F87OMLOSS**	630	630
12	1/2	M 22×1.5	13/16-16	9.5	9.5	27	24	39	60	**8M22F87OMLOS**	**8M22F87OMLOSS**	420	420
12	1/2	M 27×2.0	13/16-16	9.5	9.5	32	26	44	70	**8M27F87OMLOS**	**8M27F87OMLOSS**	420	420
14, 15, 16	5/8	M 18×1.5	1-14	12.5	9.0	27	27	41	120	**10M18F87OMLOS**	**10M18F87OMLOSS**	420	420
14, 15, 16	5/8	M 22×1.5	1-14	12.5	12.0	27	27	42	127	**10M22F87OMLOS**	**10M22F87OMLOSS**	420	420
14, 15, 16	5/8	M 27×2.0	1-14	12.5	13.0	32	29	47	177	**10M27F87OMLOS**	**10M27F87OMLOSS**	420	420
18, 20	3/4	M 22×1.5	1 3/16-12	15.5	12.0	32	30	45	170	**12M22F87OMLOS**	**12M22F87OMLOSS**	420	420
18, 20	3/4	M 27×2.0	1 3/16-12	15.5	15.0	32	30	49	187	**12M27F87OMLOS**	**12M27F87OMLOSS**	420	420
18, 20	3/4	M 33×2.0	1 3/16-12	15.5	20.0	41	33	52	200	**12M33F87OMLOS**	**12M33F87OMLOSS**	420	420
22, 25	1	M 27×2.0	1 7/16-12	20.5	15.0	41	34	52	230	**16M27F87OMLOS**	**16M27F87OMLOSS**	420	420
22, 25	1	M 33×2.0	1 7/16-12	20.5	20.0	41	34	52	270	**16M33F87OMLOS**	**16M33F87OMLOSS**	420	280
28, 30, 32	1 1/4	M 33×2.0	1 11/16-12	26.0	20.0	46	36	54	370	**20M33F87OMLOS**	**20M33F87OMLOSS**	420	280
28, 30, 32	1 1/4	M 42×2.0	1 11/16-12	26.0	26.0	50	36	55	390	**20M42F87OMLOS**	**20M42F87OMLOSS**	420	280
35, 38	1 1/2	M 42×2.0	2-12	32.0	26.0	55	36	55	400	**24M42F87OMLOS**	**24M42F87OMLOSS**	350	280
35, 38	1 1/2	M 48×2.0	2-12	32.0	32.0	55	36	57	412	**24M48F87OMLOS**	**24M48F87OMLOSS**	350	280
50	2	M 60×2.0	2 1/2-12	40.0	40.0	65	41	65	800	**32M60F87OMLOS**	**32M60F87OMLOSS**	200	280

Product delivered with NBR TRAP seal. Replacement of TRAP seal is with a standard NBR O-ring – see page J73-J74.

Part numbers shown are part of our current manufacturing programme.

Imperial and metric parts may vary in hexagon dimensions.

$\frac{\text{PN (bar)}}{10}$ = PN (MPa)

Do not create drawings from these dimensions, they are subject to change and ISO manufacturing allowances.

F5OMLO Male stud connector

O-Lok® ORFS tube end / Male UN/UNF thread – O-ring (ISO 11926)
SAE 520120

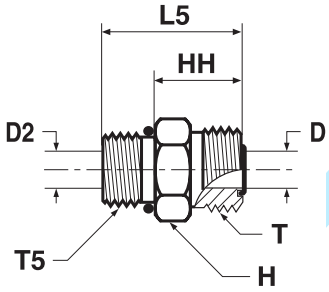

Tube O.D. mm	Tube O.D. in.	Thread UN/UNF-2A T5	Thread UN/UNF-2A T	D mm	D2 mm	H mm	HH mm	L5 mm	Weight (steel) g/1 piece	O-Lok® Steel	O-Lok® Stainless Steel	PN (bar) S	PN (bar) SS
6	1/4	7/16-20	9/16-18	4.5	4.5	17	18	29	21	**4F5OMLOS**	**4F5OMLOSS**	630	630
6	1/4	1/2-20	9/16-18	4.5	4.5	16	19	30	30	**4-5 F5OLO-S**	**4-5F5OMLOSS**	630	630
6	1/4	9/16-18	9/16-18	4.5	7.5	19	19	31	36	**4-6F5OMLOS**	**4-6F5OMLOSS**	630	630
6	1/4	3/4-16	9/16-18	4.5	10.0	22	20	34	67	**4-8 F5OLO-S**	**4-8F5OMLOSS**	630	630
8, 10	5/16, 3/8	9/16-18	11/16-16	6.5	6.5	19	20	32	45	**6F5OMLOS**	**6F5OMLOSS**	630	630
8, 10	5/16, 3/8	7/16-20	11/16-16	6.5	4.5	19	23	34	47	**6-4F5OMLOS**	**6-4F5OMLOSS**	630	630
8, 10	5/16, 3/8	1/2-20	11/16-16	6.5	6.0	19	20	31	50	**6-5 F5OLO-S**	**6-5F5OMLOSS**	630	630
8, 10	5/16, 3/8	3/4-16	11/16-16	6.5	10.0	22	21	35	51	**6-8F5OMLOS**	**6-8F5OMLOSS**	630	630
8, 10	5/16, 3/8	7/8-14	11/16-16	6.5	6.5	27	23	39	89	**6-10F5OMLOS**	**6-10F5OMLOSS**	420	420
12	1/2	3/4-16	13/16-16	9.5	9.5	22	23	37	56	**8F5OMLOS**	**8F5OMLOSS**	630	630
12	1/2	7/16-20	13/16-16	9.5	4.5	22	25	36	63	**8-4 F5OLO-S**	**8-4F5OMLOSS**	630	630
12	1/2	9/16-18	13/16-16	9.5	7.5	22	26	38	69	**8-6F5OMLOS**	**8-6F5OMLOSS**	630	630
12	1/2	7/8-14	13/16-16	9.5	9.5	27	24	40	105	**8-10F5OMLOS**	**8-10F5OMLOSS**	420	420
12	1/2	1 1/16-12	13/16-16	9.5	9.5	32	26	44	169	**8-12F5OMLOS**	**8-12F5OMLOSS**	420	420
12	1/2	1 5/16-12	13/16-16	9.5	21.5	41	27	46	227	**8-16F5OMLOS**	**8-16F5OMLOSS**	420	420
14, 15, 16	5/8	7/8-14	1-14	12.5	12.5	27	27	43	137	**10F5OMLOS**	**10F5OMLOSS**	420	420
14, 15, 16	5/8	9/16-18	1-14	12.5	7.5	27	30	42	110	**10-6 F5OLO-S**	**10-6F5OMLOSS**	420	420
14, 15, 16	5/8	3/4-16	1-14	12.5	10.0	27	31	45	120	**10-8F5OMLOS**	**10-8F5OMLOSS**	420	420
14, 15, 16	5/8	1 1/16-12	1-14	12.5	12.5	32	29	47	170	**10-12F5OMLOS**	**10-12F5OMLOSS**	420	420
18, 20	3/4	1 1/16-12	1 3/16-12	15.5	15.5	32	30	49	189	**12F5OMLOS**	**12F5OMLOSS**	420	420
18, 20	3/4	3/4-16	1 3/16-12	15.5	10.0	32	35	49	167	**12-8 F5OLO-S**	**12-8F5OMLOSS**	420	420
18, 20	3/4	7/8-14	1 3/16-12	15.5	12.5	32	35	51	177	**12-10F5OMLOS**	**12-10F5OMLOSS**	420	420
18, 20	3/4	1 5/16-12	1 3/16-12	15.5	15.5	41	31	50	280	**12-16F5OMLOS**	**12-16F5OMLOSS**	420	420
18, 20	3/4	1 5/8-12	1 3/16-12	15.5	27.5	46	32	51	350	**12-20F5OMLOS**	**12-20F5OMLOSS**	420	420
22, 25	1	1 5/16-12	1 7/16-12	20.5	20.5	38	32	50	271	**16 F5OLO-S**	**16F5OMLOSS**	420	420
22, 25	1	1 1/16-12	1 7/16-12	20.5	15.5	38	36	54	275	**16-12 F5OLO-S**	**16-12F5OMLOSS**	420	420
22, 25	1	1 3/16-12	1 7/16-12	20.5	17.0	38	32	51	279	**16-14F5OMLOS**	**16-14F5OMLOSS**	420	420
22, 25	1	1 5/8-12	1 7/16-12	20.5	27.5	48	34	52	428	**16-20 F5OLO-S**	**16-20F5OMLOSS**	420	280
28, 30, 32	1 1/4	1 5/8-12	1 11/16-12	26.0	26.0	50	34	52	391	**20F5OMLOS**	**20F5OMLOSS**	420	280
28, 30, 32	1 1/4	1 5/16-12	1 11/16-12	26.0	21.5	48	39	58	401		**20-16F5OMLOSS**		280
28, 30, 32	1 1/4	1 5/16-12	1 11/16-12	26.0	21.5	46	39	58	430	**20-16 F5OLO-S**		420	
28, 30, 32	1 1/4	1 7/8-12	1 11/16-12	26.0	32.0	54	36	54	557	**20-24 F5OLO-S**	**20-24F5OMLOSS**	350	280
35, 38	1 1/2	1 7/8-12	2-12	32.0	32.0	54	36	54	412	**24 F5OLO-S**	**24F5OMLOSS**	350	280
35, 38	1 1/2	1 5/8-12	2-12	32.0	27.5	54	41	60	581	**24-20 F5OLO-S**	**24-20F5OMLOSS**	350	280
50	2	2 1/2-12	2 1/2-12	45.0	40.0	70	40	59	900	**32 F5OLO-S**	**32F5OMLOSS**	200	200

Product delivered with NBR TRAP seal. Replacement of TRAP seal is with a standard NBR O-ring – see page J73-J74.

Part numbers shown are part of our current manufacturing programme.

Imperial and metric parts may vary in hexagon dimensions.

$\frac{\text{PN (bar)}}{10} = \text{PN (MPa)}$

Do not create drawings from these dimensions, they are subject to change and ISO manufacturing allowances.

FF5OMLO Extended male stud connector

O-Lok® ORFS tube end / Male UN/UNF thread – O-ring (ISO 11926)
SAE 521720 (Previously 520122)

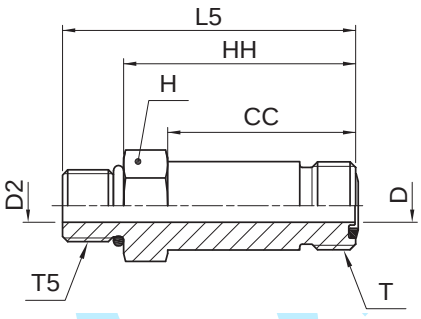

Tube O.D. mm	Tube O.D. in.	Thread UN/UNF-2A T5	Thread UN/UNF-2A T	CC mm	D mm	D2 mm	H mm	HH mm	L5 mm	Weight (steel) g/1 piece	O-Lok® Steel	O-Lok® Stainless Steel	PN (bar) S	PN (bar) SS
6	1/4	7/16-20	9/16-18	34	4.5	4.5	16	42	53	51	**4 FF5OLO-S**	**4FF5OMLOSS**	630	630
8, 10	5/16, 3/8	9/16-18	11/16-16	37	6.5	6.5	19	46	58	79	**6 FF5OLO-S**	**6FF5OMLOSS**	630	630
12	1/2	3/4-16	13/16-16	45	9.5	9.5	22	54	68	125	**8 FF5OLO-S**	**8FF5OMLOSS**	630	630
14, 15, 16	5/8	7/8-14	1-14	53	12.5	12.5	27	64	80	212	**10 FF5OLO-S**	**10FF5OMLOSS**	420	420
18, 20	3/4	1 1/16-12	1 3/16-12	64	15.5	15.5	32	77	96	309	**12 FF5OLO-S**	**12FF5OMLOSS**	420	420
22, 25	1	1 5/16-12	1 7/16-12	73	20.5	20.5	38	87	105	435	**16 FF5OLO-S**	**16FF5OMLOSS**	420	420
28, 30, 32	1 1/4	1 5/8-12	1 11/16-12	86	26.0	26.0	48	102	121	818	**20 FF5OLO-S**	**20FF5OMLOSS**	420	280
35, 38	1 1/2	1 7/8-12	2-12	97	32.0	32.0	54	115	134	1430	**24 FF5OLO-S**	**24FF5OMLOSS**	350	280

Product delivered with NBR TRAP seal. Replacement of TRAP seal is with a standard NBR O-ring – see page J73-J74.

Part numbers shown are part of our current manufacturing programme.

Imperial and metric parts may vary in hexagon dimensions.

$\frac{\text{PN (bar)}}{10}$ = PN (MPa)

Do not create drawings from these dimensions, they are subject to change and ISO manufacturing allowances.

Kovaz

WF5OLO Bulkhead male connector

O-Lok® ORFS tube end / Male UN/UNF – O-ring (ISO 11926)

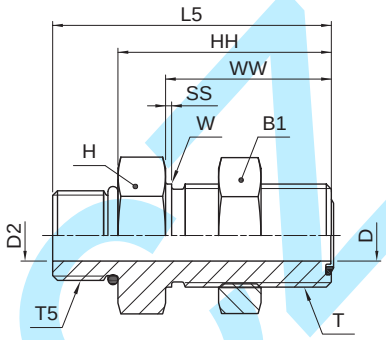

Tube O.D. mm	Tube O.D. in.	Thread UN/UNF-2A T	Thread UN/UNF-2A T5	B1 mm	D mm	D2 mm	H mm	HH mm	L5 mm	SS mm	W mm	WW mm	Weight (steel) g/1 piece	O-Lok® Steel	PN (bar)
6	1/4	9/16-18	7/16-20	21	4.5	4.5	21	43	54	2	14	32	75	**4 WF5OLO-WLNL-S**	630
8, 10	5/16, 3/8	11/16-16	9/16-18	25	6.5	6.5	25	47	59	2	18	34	112	**6 WF5OLO-WLNL-S**	630
12	1/2	13/16-16	3/4-16	29	9.5	9.5	29	52	66	2	21	37	147	**8 WF5OLO-WLNL-S**	630
14, 15, 16	5/8	1-14	7/8-14	33	12.5	12.5	33	52	68	2	25	41	295	**10 WF5OLO-WLNL-S**	420
18, 20	3/4	1 3/16-12	1 1/16-12	38	15.5	15.5	38	55	73	2	30	42	330	**12 WF5OLO-WLNL-S**	420

Product delivered with NBR TRAP seal. Replacement of TRAP seal is with a standard NBR O-ring – see page J73-J74.

Part numbers shown are part of our current manufacturing programme.

Imperial and metric parts may vary in hexagon dimensions.

For the version without the locknut remove “WLNL” (e.g. 12 WF5OLO)

$$\frac{\text{PN (bar)}}{10} = \text{PN (MPa)}$$

Do not create drawings from these dimensions, they are subject to change and ISO manufacturing allowances.

kovaz.si

F42EDMLO Male stud connector

O-Lok® ORFS tube end / Male BSPP thread – ED seal (ISO 1179)

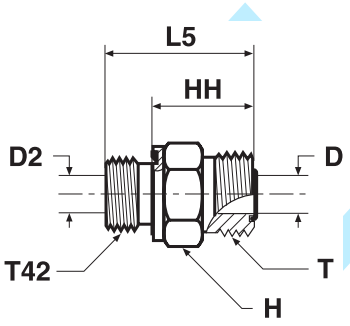

Tube O.D. mm	Tube O.D. in.	BSPP male thread T42	Thread UN/UNF-2A T	D mm	D2 mm	H mm	HH mm	L5 mm	Weight (steel) g/1 piece	O-Lok® Steel	O-Lok® Stainless Steel	PN (bar) S	PN (bar) SS
6	1/4	1/8-28	9/16-18	4.5	4.0	17	18	26	29	**4F42EDMLOS**	**4F42EDMLOSS**	630	630
6	1/4	1/4-19	9/16-18	4.5	4.5	19	19	31	42	**4-4F42EDMLOS**	**4-4F42EDMLOSS**	630	630
6	1/4	3/8-19	9/16-18	4.5	4.5	22	20	32	61	**4-6F42EDMLOS**	**4-6F42EDMLOSS**	630	630
6	1/4	1/2-14	9/16-18	4.5	4.5	27	22	36	119	**4-8F42EDMLOS**	**4-8F42EDMLOSS**	420	420
8, 10	5/16, 3/8	1/4-19	11/16-16	6.5	5.0	19	20	32	45	**6F42EDMLOS**	**6F42EDMLOSS**	630	630
8, 10	5/16, 3/8	1/8-28	11/16-16	6.5	4.0	19	23	31	44	**6-2F42EDMLOS**	**6-2F42EDMLOSS**	630	630
8, 10	5/16, 3/8	3/8-19	11/16-16	6.5	6.5	22	21	33	63	**6-6F42EDMLOS**	**6-6F42EDMLOSS**	630	630
8, 10	5/16, 3/8	1/2-14	11/16-16	6.5	6.5	27	23	37	122	**6-8F42EDMLOS**	**6-8F42EDMLOSS**	420	420
8, 10	5/16, 3/8	3/4-14	11/16-16	6.5	16.0	32	24	40	192	**6-12F42EDMLOS**	**6-12F42EDMLOSS**	420	420
12	1/2	3/8-19	13/16-16	9.5	8.0	22	23	35	196	**8F42EDMLOS**	**8F42EDMLOSS**	630	630
12	1/2	1/4-19	13/16-16	9.5	5.0	22	26	38	193	**8-4F42EDMLOS**	**8-4F42EDMLOSS**	630	630
12	1/2	1/2-14	13/16-16	9.5	9.5	27	25	39	198	**8-8F42EDMLOS**	**8-8F42EDMLOSS**	420	420
12	1/2	3/4-14	13/16-16	9.5	9.5	32	26	42	205	**8-12F42EDMLOS**	**8-12F42EDMLOSS**	420	420
14, 15, 16	5/8	1/2-14	1-14	12.5	12.5	27	27	41	332	**10F42EDMLOS**	**10F42EDMLOSS**	420	420
14, 15, 16	5/8	3/8-19	1-14	12.5	8.0	27	31	43	315	**10-6F42EDMLOS**	**10-6F42EDMLOSS**	420	420
14, 15, 16	5/8	3/4-14	1-14	12.5	12.5	32	29	45	348	**10-12F42EDMLOS**	**10-12F42EDMLOSS**	420	420
14, 15, 16	5/8	1-11	1-14	12.5	12.5	41	30	48	360	**10-16F42EDMLOS**	**10-16F42EDMLOSS**	420	420
18, 20	3/4	3/4-14	1 3/16-12	15.5	15.5	32	30	46	200	**12F42EDMLOS**	**12F42EDMLOSS**	420	420
18, 20	3/4	1/2-14	1 3/16-12	15.5	12.0	32	35	49	183	**12-8F42EDMLOS**	**12-8F42EDMLOSS**	420	420
18, 20	3/4	1-11	1 3/16-12	15.5	15.5	41	32	50	362	**12-16F42EDMLOS**	**12-16F42EDMLOSS**	420	420
18, 20	3/4	1 1/4-11	1 3/16-12	15.5	16.0	50	34	54	505	**12-20F42EDMLOS**	**12-20F42EDMLOSS**	420	420
22, 25	1	1-11	1 7/16-12	20.5	20.0	41	32	50	343	**16F42EDMLOS**	**16F42EDMLOSS**	420	420
22, 25	1	1/2-14	1 7/16-12	20.5	12.0	41	36	50	380	**16-8F42EDMLOS**	**16-8F42EDMLOSS**	420	420
22, 25	1	3/4-14	1 7/16-12	20.5	16.0	41	36	52	411	**16-12F42EDMLOS**	**16-12F42EDMLOSS**	420	420
22, 25	1	1 1/4-11	1 7/16-12	20.5	20.5	50	34	54	487	**16-20F42EDMLOS**	**16-20F42EDMLOSS**	420	420
22, 25	1	1 1/2-11	1 7/16-12	20.5	20.5	55	36	58	715	**16-24F42EDMLOS**	**16-24F42EDMLOSS**	350	280
28, 30, 32	1 1/4	1 1/4-11	1 11/16-12	25.0	25.0	50	34	54	454	**20F42EDMLOS**	**20F42EDMLOSS**	420	280
28, 30, 32	1 1/4	3/4-14	1 11/16-12	26.0	16.0	46	37	53	362	**20-12F42EDMLOS**	**20-12F42EDMLOSS**	420	280
28, 30, 32	1 1/4	1-11	1 11/16-12	26.0	20.0	46	39	57	412	**20-16F42EDMLOS**	**20-16F42EDMLOSS**	420	280
28, 30, 32	1 1/4	1 1/2-11	1 11/16-12	26.0	26.0	55	36	58	532	**20-24F42EDMLOS**	**20-24F42EDMLOSS**	350	280
35, 38	1 1/2	1 1/2-11	2-12	32.0	32.0	55	36	58	585	**24F42EDMLOS**	**24F42EDMLOSS**	350	280
35, 38	1 1/2	1-11	2-12	32.0	20.0	55	41	59	471	**24-16F42EDMLOS**	**24-16F42EDMLOSS**	350	280
35, 38	1 1/2	1 1/4-11	2-12	32.0	25.0	55	41	61	540	**24-20F42EDMLOS**	**24-20F42EDMLOSS**	350	280

Product delivered with NBR TRAP seal. Replacement of TRAP seal is with a standard NBR O-ring – see page J73-J74.

Part numbers shown are part of our current manufacturing programme.

Imperial and metric parts may vary in hexagon dimensions.

$\frac{\text{PN (bar)}}{10}$ = PN (MPa)

Do not create drawings from these dimensions, they are subject to change and ISO manufacturing allowances.

FF42EDMLO Extended male stud connector

O-Lok® ORFS tube end / Male BSPP thread - ED seal (ISO 1179-2)

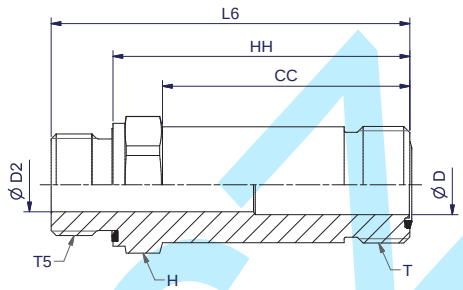

Tube O.D. mm	Tube O.D. inch	Thread UN/UNF-2A	Thread BSPP	CC mm	D mm	D2 mm	H mm	HH mm	L6 mm	Weight (steel) g/1 piece	O-Lok® Steel	O-Lok® Stainless Steel	PN (bar) S	PN (bar) SS
8, 10	5/16, 3/8	11/16-16	1/4-19	37	7	5	19	46	58	80	**6FF42EDMLOS**	**6FF42EDMLOSS**	630	630
12	1/2	13/16-16	3/8-14	44	10	8	22	54	66	130	**8FF42EDMLOS**	**8FF42EDMLOSS**	630	630
14, 15, 16	5/8	1-14	1/2-14	52	13	13	27	63	77	200	**10FF42EDMLOS**	**10FF42EDMLOSS**	420	420
18, 20	3/4	1 3/16-12	3/4-14	64	16	16	32	74	93	360	**12FF42EDMLOS**	**12FF42EDMLOSS**	420	420

Product delivered with NBR TRAP seal. Replacement of TRAP seal is with a standard NBR O-ring – see page J73-J74.

Order codes shown are part of our current manufacturing programme.

Imperial and metric parts may vary in hexagon dimensions.

$\frac{\text{PN (bar)}}{10}$ = PN (MPa)

Do not create drawings from these dimensions, they are subject to change and ISO manufacturing allowances.

J

kovaz.cz

F82EDMLO Male stud connector

O-Lok® ORFS tube end / Male metric thread – ED seal (ISO 9974)

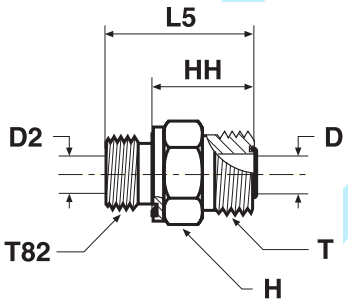

Tube O.D. mm	Tube O.D. in.	Thread metric T82	Thread UN/UNF-2A T	D mm	D2 mm	H mm	HH mm	L5 mm	Weight (steel) g/1 piece	O-Lok® Steel	O-Lok® Stainless Steel	PN (bar) S	PN (bar) SS
6	1/4	M 10×1.0	9/16-18	4.5	4.0	17	18	26	20	**4M10F82EDMLOS**	**4M10F82EDMLOSS**	630	630
6	1/4	M 12×1.5	9/16-18	4.5	4.0	17	18	30	24	**4M12F82EDMLOS**	**4M12F82EDMLOSS**	630	630
6	1/4	M 14×1.5	9/16-18	4.5	4.5	19	19	31	29	**4M14F82EDMLOS**	**4M14F82EDMLOSS**	630	630
6	1/4	M 16×1.5	9/16-18	4.5	7.0	22	19	31	33	**4M16F82EDMLOS**	**4M16F82EDMLOSS**	630	630
8, 10	5/16, 3/8	M 12×1.5	11/16-16	6.5	4.0	19	23	35	35	**6M12F82EDMLOS**	**6M12F82EDMLOSS**	630	630
8, 10	5/16, 3/8	M 14×1.5	11/16-16	6.5	5.0	19	20	32	40	**6M14F82EDMLOS**	**6M14F82EDMLOSS**	630	630
8, 10	5/16, 3/8	M 16×1.5	11/16-16	6.5	6.5	22	20	32	43	**6M16F82EDMLOS**	**6M16F82EDMLOSS**	630	630
8, 10	5/16, 3/8	M 18×1.5	11/16-16	6.5	6.5	24	21	33	70	**6M18F82EDMLOS**	**6M18F82EDMLOSS**	630	630
8, 10	5/16, 3/8	M 22×1.5	11/16-16	6.5	12.0	27	23	37	83	**6M22F82EDMLOS**	**6M22F82EDMLOSS**	630	630
12	1/2	M 12×1.5	13/16-16	9.5	4.0	22	24	36	58	**8M12F82EDMLOS**	**8M12F82EDMLOSS**	630	630
12	1/2	M 14×1.5	13/16-16	9.5	5.0	22	23	35	57	**8M14F82EDMLOS**	**8M14F82EDMLOSS**	630	630
12	1/2	M 16×1.5	13/16-16	9.5	7.0	22	26	38	49	**8M16F82EDMLOS**	**8M16F82EDMLOSS**	630	630
12	1/2	M 18×1.5	13/16-16	9.5	8.0	24	23	35	55	**8M18F82EDMLOS**	**8M18F82EDMLOSS**	630	630
12	1/2	M 26×1.5	13/16-16	9.5	9.5	32	26	42	148	**8M26F82EDMLOS**	**8M26F82EDMLOSS**	420	420
14, 15, 16	5/8	M 16×1.5	1-14	12.5	7.0	27	30	42	70	**10M16F82EDMLOS**	**10M16F82EDMLOSS**	420	420
14, 15, 16	5/8	M 18×1.5	1-14	12.5	8.0	27	31	43	85	**10M18F82EDMLOS**	**10M18F82EDMLOSS**	420	420
14, 15, 16	5/8	M 22×1.5	1-14	12.5	12.0	27	27	41	127	**10M22F82EDMLOS**	**10M22F82EDMLOSS**	420	420
14, 15, 16	5/8	M 26×1.5	1-14	12.5	18.0	32	31	47	170	**10M26F82EDMLOS**	**10M26F82EDMLOSS**	420	420
18, 20	3/4	M 18×1.5	1 3/16-12	15.5	8.0	32	35	47	184	**12M18F82EDMLOS**	**12M18F82EDMLOSS**	420	420
18, 20	3/4	M 22×1.5	1 3/16-12	15.5	12.0	32	35	47	173	**12M22F82EDMLOS**	**12M22F82EDMLOSS**	420	420
18, 20	3/4	M 27×2.0	1 3/16-12	15.5	15.5	32	30	46	187	**12M27F82EDMLOS**	**12M27F82EDMLOSS**	420	420
22, 25	1	M 33×2.0	1 7/16-12	20.5	20.0	41	32	50	270	**16M33F82EDMLOS**	**16M33F82EDMLOSS**	420	420
28, 30, 32	1 1/4	M 42×2.0	1 11/16-12	26.0	25.0	50	34	54	390	**20M42F82EDMLOS**	**20M42F82EDMLOSS**	420	280
35, 38	1 1/2	M 48×2.0	2-12	32.0	32.0	55	36	58	412	**24M48F82EDMLOS**	**24M48F82EDMLOSS**	350	280

Product delivered with NBR TRAP seal. Replacement of TRAP seal is with a standard NBR O-ring – see page J73-J74.

Part numbers shown are part of our current manufacturing programme.

Imperial and metric parts may vary in hexagon dimensions.

$\frac{\text{PN (bar)}}{10}$ = PN (MPa)

Do not create drawings from these dimensions, they are subject to change and ISO manufacturing allowances.

FLO Male stud connector

O-Lok® ORFS tube end / Male NPTF* thread (SAE J476)

*Stainless Steel = NPT to prevent galling

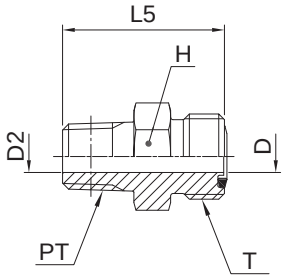

Tube O.D. mm	Tube O.D. in.	Thread NPTF PT	Thread UN/UNF-2A T	D mm	D2 mm	L5 mm	H mm	Weight (steel) g/1 piece	O-Lok® Steel	O-Lok® Stainless Steel	PN (bar) S	PN (bar) SS
6	1/4	1/8-27	9/16-18	4.5	4.5	27	16	26	**4 FLO-S**	**4 FLO-SS**	420	420
6	1/4	1/4-18	9/16-18	4.5	4.5	32	16	34	**4-4 FLO-S**	**4-4 FLO-SS**	420	420
6	1/4	3/8-18	9/16-18	4.5	4.5	34	19	47	**4-6 FLO-S**	**4-6 FLO-SS**	420	420
8, 10	5/16, 3/8	1/4-18	11/16-16	6.5	6.5	32	19	39	**6 FLO-S**	**6 FLO-SS**	420	420
8, 10	5/16, 3/8	3/8-18	11/16-16	6.5	6.5	34	19	52	**6-6 FLO-S**	**6-6 FLO-SS**	420	420
8, 10	5/16, 3/8	1/2-14	11/16-16	6.5	6.5	39	22	82	**6-8 FLO-S**	**6-8 FLO-SS**	420	420
12	1/2	3/8-18	13/16-16	9.5	9.5	38	22	83	**8 FLO-S**	**8 FLO-SS**	420	420
12	1/2	1/2-14	13/16-16	9.5	6.5	42	22	84	**8-8 FLO-S**	**8-8 FLO-SS**	420	420
12	1/2	3/4-14	13/16-16	9.5	9.5	43	29	166	**8-12 FLO-S**	**8-12 FLO-SS**	380	350
14, 15, 16	5/8	1/2-14	1-14	12.5	12.5	46	27	115	**10 FLO-S**	**10 FLO-SS**	420	420
14, 15, 16	5/8	3/4-14	1-14	12.5	12.5	46	29	138	**10-12 FLO-S**	**10-12 FLO-SS**	380	350
18, 20	3/4	3/4-14	1 3/16-12	15.5	15.5	49	32	179	**12 FLO-S**	**12 FLO-SS**	380	350
18, 20	3/4	1/2-14	1 3/16-12	15.5	13.5	49	32	165	**12-8 FLO-S**	**12-8 FLO-SS**	420	420
18, 20	3/4	1-11.5	1 3/16-12	15.5	15.5	54	35	225	**12-16 FLO-S**	**12-16 FLO-SS**	310	210
22, 25	1	1-11.5	1 7/16-12	20.5	20.5	56	38	271	**16 FLO-S**	**16 FLO-SS**	310	210
22, 25	1	3/4-14	1 7/16-12	20.5	18.3	51	38	238	**16-12 FLO-S**	**16-12 FLO-SS**	380	350
28, 30, 32	1 1/4	1 1/4-11.5	1 11/16-12	26.0	26.0	58	48	424	**20 FLO-S**	**20 FLO-SS**	210	210
35, 38	1 1/2	1 1/2-11.5	2-12	32.0	32.0	61	54	534	**24 FLO-S**	**24 FLO-SS**	200	175

Product delivered with NBR TRAP seal. Replacement of TRAP seal is with a standard NBR O-ring – see page J73-J74.

Part numbers shown are part of our current manufacturing programme.

Imperial and metric parts may vary in hexagon dimensions.

$\frac{\text{PN (bar)}}{10}$ = PN (MPa)

Do not create drawings from these dimensions, they are subject to change and ISO manufacturing allowances.

F687OML Swivel male stud

O-Lok® ORFS Female swivel end / Male metric thread – O-ring (ISO 6149-2)

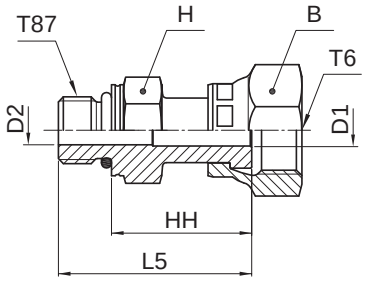

Tube O.D. mm	Tube O.D. in.	Thread metric T87	Thread UN/UNF-2B T6	B mm	H mm	D1 mm	D2 mm	L5 mm	HH mm	Weight (steel) g/1 piece	O-Lok® Steel	O-Lok® Stainless Steel	PN (bar) S	PN (bar) SS
6	1/4	M 12×1.5	9/16-18	17	17	4.0	4.0	38	27	53	**4M12F6870MLS**	**4M12F6870MLSS**	500	420
8, 10	3/8	M 14×1.5	11/16-16	22	19	6.5	6.0	40	29	72	**6M14F6870MLS**	**6M14F6870MLSS**	630	420
8, 10	3/8	M 16×1.5	11/16-16	22	22	7.0	7.0	42	29	85	**6M16F6870MLS**	**6M16F6870MLSS**	630	420
12	1/2	M 16×1.5	13/16-16	24	22	9.0	7.0	49	36	110	**8M16F6870MLS**	**8M16F6870MLSS**	630	420
14, 15, 16	5/8	M 22×1.5	1-14	30	27	11.5	11.5	53	38	173	**10M22F6870MLS**	**10M22F6870MLSS**	420	400
18, 20	3/4	M 22×1.5	1 3/16-12	36	30	14.0	12.0	57	42	230	**12M22F6870MLS**	**12M22F6870MLSS**	420	400
18, 20	3/4	M 27×2.0	1 3/16-12	36	32	14.0	14.0	61	42	275	**12M27F6870MLS**	**12M27F6870MLSS**	420	400
22, 25	1	M 33×2.0	1 7/16-12	41	41	20.0	20.0	68	49	462	**16M33F6870MLS**	**16M33F6870MLSS**	420	400
28, 30, 32	1 1/4	M 42×2.0	1 11/16-12	50	50	26.0	26.0	71	52	622	**20M42F6870MLS**	**20M42F6870MLSS**	350	280
35, 38	1 1/2	M 48×2.0	2-12	60	55	32.0	32.0	71	50	885	**24M48F6870MLS**	**24M48F6870MLSS**	280	280

O-Lok® is delivered with NBR elastomeric seals as standard. For more details on other seal materials see page J73-J74.

Part numbers shown are part of our current manufacturing programme.

Imperial and metric parts may vary in hexagon dimensions.

$\frac{\text{PN (bar)}}{10}$ = PN (MPa)

Do not create drawings from these dimensions, they are subject to change and ISO manufacturing allowances.

Kovair

F65OL Swivel male stud

O-Lok® ORFS female swivel end / Male UN/UNF thread – O-ring (ISO 11926)
SAE 520181

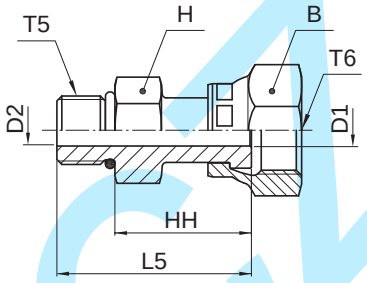

Tube O.D. mm	Tube O.D. in.	Thread UN/UNF-2A T5	Thread UN/UNF-2B T6	B mm	D1 mm	D2 mm	H mm	HH mm	L5 mm	Weight (steel) g/1 piece	O-Lok® Steel	PN (bar)
6	1/4	7/16-20	9/16-18	18	4.0	4.0	16	26	37	53	**4 F65OL-S**	500
8, 10	5/16, 3/8	9/16-18	11/16-16	21	6.5	6.5	19	28	40	66	**6 F65OL-S**	630
12	1/2	3/4-16	13/16-16	24	9.0	9.0	22	36	50	110	**8 F65OL-S**	630
14, 15, 16	5/8	7/8-14	1-14	29	11.5	12.5	27	38	54	173	**10 F65OL-S**	420
18, 20	3/4	1 1/16-12	1 3/16-12	35	14.0	15.5	32	41	59	275	**12 F65OL-S**	420
22, 25	1	1 5/16-12	1 7/16-12	41	20.0	20.0	38	49	68	462	**16 F65OL-S**	420
28, 30, 32	1 1/4	1 5/8-12	1 11/16-12	48	26.0	26.0	48	49	68	622	**20 F65OL-S**	350

O-Lok® is delivered with NBR elastomeric seals as standard. For more details on other seal materials see page J73-J74.

Part numbers shown are part of our current manufacturing programme.

Imperial and metric parts may vary in hexagon dimensions.

$\frac{\text{PN (bar)}}{10}$ = PN (MPa)

Do not create drawings from these dimensions, they are subject to change and ISO manufacturing allowances.

kovaz.cz

F642EDML Swivel male stud

O-Lok® ORFS Swivel female end / Male BSPP thread – ED seal (ISO 1179)

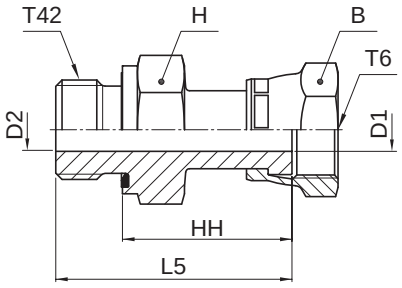

Tube O.D. mm	Tube O.D. in.	Thread BSPP T42	Thread UN/UNF-2B T6	B mm	H mm	D1 mm	D2 mm	L5 mm	HH mm	Weight (steel) g/1 piece	O-Lok® Steel	O-Lok® Stainless Steel	PN (bar) S	PN (bar) SS
6	1/4	1/8-28	9/16-18	17	14	4.0	4.0	35	27	43	**4F642EDMLS**	**4F642EDMLSS**	500	420
6	1/4	1/4-19	9/16-18	17	19	4.0	4.0	39	27	59	**4-4F642EDMLS**	**4-4F642EDMLSS**	500	420
8, 10	5/16, 3/8	1/4-19	11/16-16	22	19	6.5	5.0	41	29	72	**6F642EDMLS**	**6F642EDMLSS**	630	420
8, 10	5/16, 3/8	3/8-19	11/16-16	22	22	6.5	6.5	41	29	86	**6-6F642EDMLS**	**6-6F642EDMLSS**	630	420
8, 10	5/16, 3/8	1/2-14	11/16-16	22	27	6.5	6.5	43	29	92	**6-8F642EDMLS**	**6-8F642EDMLSS**	420	420
12	1/2	3/8-19	13/16-16	24	22	9.0	8.0	48	36	104	**8F642EDMLS**	**8F642EDMLSS**	630	420
12	1/2	1/4-19	13/16-16	24	22	9.0	5.0	48	36	98	**8-4F642EDMLS**	**8-4F642EDMLSS**	630	420
12	1/2	1/2-14	13/16-16	24	27	9.0	9.0	50	36	142	**8-8F642EDMLS**	**8-8F642EDMLSS**	420	420
14, 15, 16	5/8	1/2-14	1-14	30	27	11.5	11.5	52	38	165	**10F642EDMLS**	**10F642EDMLSS**	420	420
14, 15, 16	5/8	3/4-14	1-14	30	32	11.5	11.5	54	38	185	**10-12F642EDMLS**	**10-12F642EDMLSS**	420	420
18, 20	3/4	3/4-14	1 3/16-12	36	32	14.0	14.0	58	42	266	**12F642EDMLS**	**12F642EDMLSS**	420	420
18, 20	3/4	1/2-14	1 3/16-12	36	30	14.0	12.0	56	42	220	**12-8F642EDMLS**	**12-8F642EDMLSS**	420	420
22, 25	1	1-11	1 7/16-12	41	41	20.0	20.0	67	49	414	**16F642EDMLS**	**16F642EDMLSS**	420	420
28, 30, 32	1 1/4	1-11	1 11/16-12	50	46	26.0	20.0	67	49	655	**20-16F642EDMLS**	**20-16F642EDMLSS**	350	280
28, 30, 32	1 1/4	1 1/4-11	1 11/16-12	50	50	26.0	25.0	69	49	623	**20F642EDMLS**	**20F642EDMLSS**	350	280
35, 38	1 1/2	1 1/2-11	2-12	60	55	32.0	32.0	72	50	885	**24F642EDMLS**	**24F642EDMLSS**	280	280

O-Lok® is delivered with NBR elastomeric seals as standard. For more details on other seal materials see page J73-J74.

Part numbers shown are part of our current manufacturing programme.

Imperial and metric parts may vary in hexagon dimensions.

$$\frac{\text{PN (bar)}}{10} = \text{PN (MPa)}$$

Do not create drawings from these dimensions, they are subject to change and ISO manufacturing allowances.

F682EDML Swivel male stud

O-Lok® ORFS Swivel female end / Male metric thread – ED seal (ISO 9974)

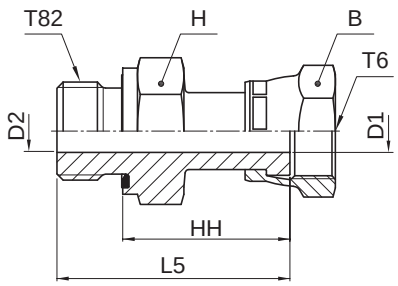

Tube O.D. mm	Tube O.D. in.	Thread metric T82	Thread UN/UNF-2B T6	B mm	H mm	D1 mm	D2 mm	L5 mm	HH mm	Weight (steel) g/1 piece	O-Lok® Steel	O-Lok® Stainless Steel	PN (bar) S	PN (bar) SS
6	1/4	M 12×1.5	9/16-18	17	17	4.0	4.0	39	27	56	**4M12F682EDMLS**	**4M12F682EDMLSS**	500	420
8, 10	5/16, 3/8	M 12×1.5	11/16-16	22	19	6.5	4.0	41	29	70	**6M12F682EDMLS**	**6M12F682EDMLSS**	500	420
8, 10	5/16, 3/8	M 14×1.5	11/16-16	22	19	6.5	5.0	41	29	73	**6M14F682EDMLS**	**6M14F682EDMLSS**	630	420
8, 10	5/16, 3/8	M 16×1.5	11/16-16	22	22	6.5	6.5	41	29	85	**6M16F682EDMLS**	**6M16F682EDMLSS**	630	420
12	1/2	M 16×1.5	13/16-16	24	22	9.0	7.0	48	36	109	**8M16F682EDMLS**	**8M16F682EDMLSS**	630	420
14, 15, 16	5/8	M 22×1.5	1-14	30	27	11.5	11.5	53	39	165	**10M22F682EDMLS**	**10M22F682EDMLSS**	420	420
18, 20	3/4	M 27×2.0	1 3/16-12	36	32	14.0	14.0	58	42	282	**12M27F682EDMLS**	**12M27F682EDMLSS**	420	420
22, 25	1	M 33×2.0	1 7/16-12	41	41	20.0	20.0	68	50	467	**16M33F682EDMLS**	**16M33F682EDMLSS**	420	420
28, 30, 32	1 1/4	M 42×2.0	1 11/16-12	50	50	26.0	26.0	70	50	635	**20M42F682EDMLS**	**20M42F682EDMLSS**	350	280
35, 38	1 1/2	M 48×2.0	2-12	60	55	32.0	32.0	72	50	885	**24M48F682EDMLS**	**24M48F682EDMLSS**	280	280

O-Lok® is delivered with NBR elastomeric seals as standard. For more details on other seal materials see page J73-J74.

Part numbers shown are part of our current manufacturing programme.

Imperial and metric parts may vary in hexagon dimensions.

$\frac{\text{PN (bar)}}{10} = \text{PN (MPa)}$

Do not create drawings from these dimensions, they are subject to change and ISO manufacturing allowances.

Kovaci

C87OMLO Male stud elbow

O-Lok® ORFS tube end / Male metric thread – O-ring (ISO 6149-2)
SAE 52M0287 ISO 8434-3 SDE

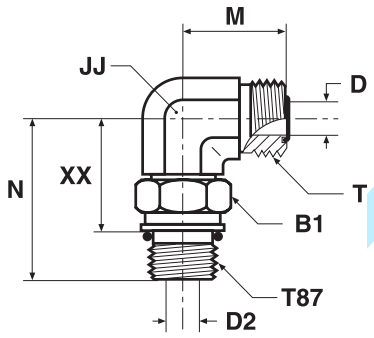

Tube O.D. mm	Tube O.D. in.	Thread metric T87	Thread UN/UNF-2B T	B1 mm	D mm	D2 mm	JJ* mm	M mm	N mm	XX mm	Weight (steel) g/1 piece	O-Lok® Steel	O-Lok® Stainless Steel	PN (bar) S	PN (bar) SS
6	1/4	M 10×1.0	9/16-18	14	4.5	3	14	22	31	21	50	**4M10C870MLOS**	**4M10C870MLOSS**	420	420
6	1/4	M 12×1.5	9/16-18	17	4.5	4	14	22	33	21	52	**4M12C870MLOS**	**4M12C870MLOSS**	420	420
6	1/4	M 14×1.5	9/16-18	19	4.5	6	14	24	36	24	55	**4M14C870MLOS**	**4M14C870MLOSS**	420	420
8, 10	5/16, 3/8	M 12×1.5	11/16-16	17	6.5	4	19	25	36	24	60	**6M12C870MLOS**	**6M12C870MLOSS**	420	420
8, 10	5/16, 3/8	M 14×1.5	11/16-16	19	6.5	6	19	25	36	24	60	**6M14C870MLOS**	**6M14C870MLOSS**	420	420
8, 10	5/16, 3/8	M 16×1.5	11/16-16	22	6.5	7	19	25	38	24	65	**6M16C870MLOS**	**6M16C870MLOSS**	420	420
8, 10	5/16, 3/8	M 18×1.5	11/16-16	24	6.5	9	19	27	41	26	130	**6M18C870MLOS**	**6M18C870MLOSS**	420	420
12	1/2	M 14×1.5	13/16-16	19	9.5	6	19	28	36	24	150	**8M14C870MLOS**	**8M14C870MLOSS**	420	420
12	1/2	M 16×1.5	13/16-16	22	9.5	7	19	28	38	25	92	**8M16C870MLOS**	**8M16C870MLOSS**	420	420
12	1/2	M 18×1.5	13/16-16	24	9.5	9	19	28	41	26	161	**8M18C870MLOS**	**8M18C870MLOSS**	420	420
12	1/2	M 22×1.5	13/16-16	27	9.5	12	27	31	49	33	200	**8M22C870MLOS**	**8M22C870MLOSS**	420	420
14, 15, 16	5/8	M 18×1.5	1-14	24	12.5	9	27	33	48	33	190	**10M18C870MLOS**	**10M18C870MLOSS**	420	420
14, 15, 16	5/8	M 22×1.5	1-14	27	12.5	12	27	33	49	33	214	**10M22C870MLOS**	**10M22C870MLOSS**	420	420
18, 20	3/4	M 22×1.5	1 3/16-12	27	15.5	12	30	37	50	34	390	**12M22C870MLOS**	**12M22C870MLOSS**	420	420
18, 20	3/4	M 27×2.0	1 3/16-12	32	15.5	15	30	37	56	37	440	**12M27C870MLOS**	**12M27C870MLOSS**	420	420
22, 25	1	M 33×2.0	1 7/16-12	41	20.5	20	36	42	59	41	501	**16M33C870MLOS**	**16M33C870MLOSS**	420	420
28, 30, 32	1 1/4	M 33×2.0	1 11/16-12	41	26.0	20	41	45	62	43	530	**20M33C870MLOS**	**20M33C870MLOSS**	350	280
28, 30, 32	1 1/4	M 42×2.0	1 11/16-12	50	26.0	26	41	45	63	44	561	**20M42C870MLOS**	**20M42C870MLOSS**	280	280
35, 38	1 1/2	M 48×2.0	2-12	55	32.0	32	50	49	72	50	684	**24M48C870MLOS**	**24M48C870MLOSS**	280	280

Product delivered with NBR TRAP seal. Replacement of TRAP seal is with a standard NBR O-ring – see page J73-J74.

Part numbers shown are part of our current manufacturing programme.

Imperial and metric parts may vary in hexagon dimensions.

$\frac{\text{PN (bar)}}{10}$ = PN (MPa)

Do not create drawings from these dimensions, they are subject to change and ISO manufacturing allowances.
*JJ may vary in stainless steel

C5OMLO Male stud elbow

O-Lok® ORFS tube end / Male UN/UNF thread – O-ring (ISO 11926)
SAE 520220

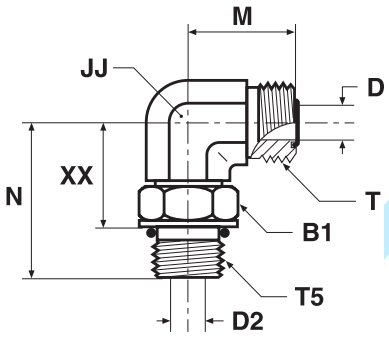

Tube O.D. mm	Tube O.D. in.	Thread UN/UNF-2A T5	Thread UN/UNF-2A T	B1 mm	D mm	D2 mm	JJ* mm	M mm	N mm	XX mm	Weight (steel) g/1 piece	O-Lok® Steel	O-Lok® Stainless Steel	PN (bar) S	PN (bar) SS
6	1/4	7/16-20	9/16-18	17	4.5	4.5	14	22	33	21	53	**4C50MLOS**	**4C50MLOSS**	420	420
6	1/4	9/16-18	9/16-18	19	4.5	7.5	19	24	37	24	66	**4-6C50MLOS**	**4-6C50MLOSS**	420	420
8, 10	3/8	9/16-18	11/16-16	19	6.5	7.5	19	25	37	24	68	**6C50MLOS**	**6C50MLOSS**	420	420
8, 10	3/8	7/16-20	11/16-16	16	6.5	4.5	19	25	35	24	57	**6-4 C50LO-S**	**6-4C50MLOSS**	420	420
8, 10	3/8	1/2-20	11/16-16	18	6.5	6.0	19	25	35	23	94	**6-5 C50LO-S**	**6-5C50MLOSS**	420	420
8, 10	3/8	3/4-16	11/16-16	24	6.5	10.0	19	26	41	26	105	**6-8C50MLOS**	**6-8C50MLOSS**	420	420
8, 10	3/8	7/8-14	11/16-16	27	6.5	12.5	22	29	50	33	196	**6-10 C50LO-S**	**6-10C50MLOSS**	420	420
8, 10	3/8	1 1/16-12	11/16-16	35	6.5	15.5	27	33	55	36	250	**6-12 C50LO-S**	**6-12C50MLOSS**	420	420
12	1/2	3/4-16	13/16-16	24	9.5	10.0	19	28	41	26	164	**8C50MLOS**	**8C50MLOSS**	420	420
12	1/2	1/2-20	13/16-16	18	9.5	6.0	19	28	35	23	101	**8-5 C50LO-S**	**8-5C50MLOSS**	420	420
12	1/2	9/16-18	13/16-16	19	9.5	7.5	19	28	37	24	81	**8-6 C50LO-S**	**8-6C50MLOSS**	420	420
12	1/2	7/8-14	13/16-16	27	9.5	12.5	27	31	50	33	187	**8-10C50MLOS**	**8-10C50MLOSS**	420	420
12	1/2	1 1/16-12	13/16-16	36	9.5	15.5	30	34	55	36	201	**8-12C50MLOS**	**8-12C50MLOSS**	420	420
14, 15, 16	5/8	7/8-14	1-14	27	12.5	12.5	27	33	50	33	214	**10C50MLOS**	**10C50MLOSS**	420	420
14, 15, 16	5/8	3/4-16	1-14	24	12.5	10.0	27	33	46	32	175	**10-8 C50LO-S**	**10-8C50MLOSS**	420	420
14, 15, 16	5/8	1 1/16-12	1-14	35	12.5	15.5	30	36	55	36	248	**10-12 C50LO-S**	**10-12C50MLOSS**	420	420
18, 20	3/4	1 1/16-12	1 3/16-12	36	15.5	15.5	30	37	55	36	442	**12C50MLOS**	**12C50MLOSS**	420	420
18, 20	3/4	3/4-16	1 3/16-12	24	15.5	10.0	30	37	47	32	325	**12-8 C50LO-S**	**12-8C50MLOSS**	420	420
18, 20	3/4	7/8-14	1 3/16-12	27	15.5	12.5	30	37	51	34	296	**12-10C50MLOS**	**12-10C50MLOSS**	420	420
18, 20	3/4	1 5/16-12	1 3/16-12	41	15.5	21.5	36	41	60	41	346	**12-16 C50LO-S**	**12-16C50MLOSS**	380	380
25	1	1 5/16-12	1 7/16-12	41	20.5	21.5	36	42	60	41	502	**16 C50LO-S**	**16C50MLOSS**	380	380
25	1	1 1/16-12	1 7/16-12	35	20.5	15.5	36	42	59	40	473	**16-12 C50LO-S**	**16-12C50MLOSS**	420	420
25	1	1 5/8-12	1 7/16-12	48	20.5	27.5	41	45	62	43	580	**16-20 C50LO-S**	**16-20C50MLOSS**	280	280
28, 30, 32	1 1/4	1 5/8-12	1 11/16-12	48	26.0	27.5	41	45	62	43	563	**20 C50LO-S**	**20C50MLOSS**	280	280
28, 30, 32	1 1/4	1 5/16-12	1 11/16-12	41	26.0	21.5	41	45	62	43	563	**20-16 C50LO-S**	**20-16C50MLOSS**	380	280
28, 30, 32	1 1/4	1 7/8-12	1 11/16-12	54	26.0	33.5	48	49	66	47	764	**20-24 C50LO-S**	**20-24C50MLOSS**	280	280
35, 38	1 1/2	1 7/8-12	2-12	54	32.0	33.5	48	49	66	47	689	**24 C50LO-S**	**24C50MLOSS**	280	280
35, 38	1 1/2	1 5/8-12	2-12	48	32.0	26.0	48	49	66	47	644	**24-20 C50LO-S**	**24-20C50MLOSS**	280	280
50	2	2 1/2-12	2 1/2-12	70	45.0	40.0	64	70	78	59	2200	**32 C50LO-S**	**32C50MLOSS**	170	170

Product delivered with NBR TRAP seal. Replacement of TRAP seal is with a standard NBR O-ring – see page J73-J74.

Part numbers shown are part of our current manufacturing programme.

Imperial and metric parts may vary in hexagon dimensions.

$\frac{\text{PN (bar)}}{10}$ = PN (MPa)

Do not create drawings from these dimensions, they are subject to change and ISO manufacturing allowances.
*JJ may vary in stainless steel

CC5OLO Extended male stud elbow

O-Lok® ORFS tube end / Male UN/UNF thread – O-ring (ISO 11926)
SAE 521520

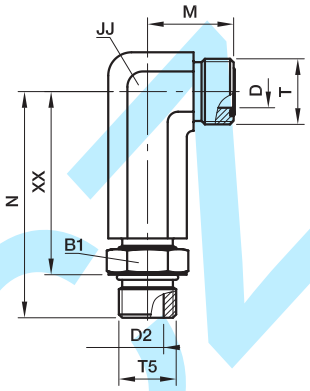

Tube O.D. mm	Tube O.D. in.	Thread UN/UNF-2A T5	Thread UN/UNF-2A T	B1 mm	D mm	D2 mm	JJ* mm	M mm	N mm	XX mm	Weight (steel) g/1 piece	O-Lok® Steel	PN (bar)
6	1/4	7/16-20	9/16-18	16	4.5	4.5	14	22	57	45	44	**4 CC5OLO-S**	420
8, 10	3/8	9/16-18	11/16-16	19	6.5	7.5	22	25	66	54	51	**6 CC5OLO-S**	420
12	1/2	3/4-16	13/16-16	24	9.5	10.0	22	28	75	61	146	**8 CC5OLO-S**	420
14, 15, 16	5/8	7/8-14	1-14	27	12.5	12.5	27	33	89	73	159	**10 CC5OLO-S**	420
18, 20	3/4	1 1/16-12	1 3/16-12	35	15.5	15.5	33	37	101	82	291	**12 CC5OLO-S**	420
25	1	1 5/16-12	1 7/16-12	41	20.5	21.5	41	42	115	96	481	**16 CC5OLO-S**	380

Product delivered with NBR TRAP seal. Replacement of TRAP seal is with a standard NBR O-ring – see page J73-J74.

Part numbers shown are part of our current manufacturing programme.

Imperial and metric parts may vary in hexagon dimensions.

$\frac{\text{PN (bar)}}{10}$ = PN (MPa)

Do not create drawings from these dimensions, they are subject to change and ISO manufacturing allowances.
*JJ may vary in stainless steel

Kovaz

C4OMLO Male stud elbow

O-Lok® ORFS tube end / Male BSPP thread O-ring + retaining ring (ISO 1179)

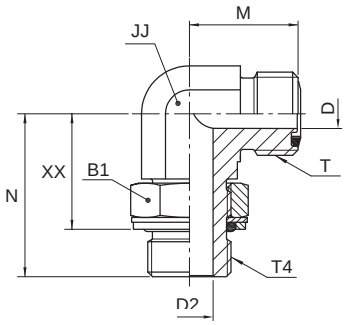

Tube O.D. mm	Tube O.D. in.	Thread BSPP T4	Thread UN/UNF-2A T	B1 mm	D mm	D2 mm	JJ* mm	M mm	N mm	XX mm	Weight (steel) g/1 piece	O-Lok® Steel	O-Lok® Stainless Steel	PN (bar) S	PN (bar) SS
6	1/4	1/8-28	9/16-18	14	4.5	4.4	14	22	30	21	49	**4C40MLOS**	**4C40MLOSS**	250	250
6	1/4	1/4-19	9/16-18	19	4.5	7.5	19	24	36	25	93	**4-4C40MLOS**	**4-4C40MLOSS**	250	200
6	1/4	3/8-19	9/16-18	22	4.5	9.9	19	25	38	27	99	**4-6C40MLOS**	**4-6C40MLOSS**	250	200
8, 10	3/8	1/4-19	11/16-16	19	6.5	7.5	19	25	36	25	97	**6C40MLOS**	**6C40MLOSS**	250	200
8, 10	3/8	1/8-28	11/16-16	14	6.5	4.4	19	25	32	23	62	**6-2C40MLOS**	**6-2C40MLOSS**	250	200
8, 10	3/8	3/8-19	11/16-16	22	6.5	9.9	19	27	38	27	106	**6-6C40MLOS**	**6-6C40MLOSS**	250	200
8, 10	3/8	1/2-14	11/16-16	27	6.5	12.3	27	29	49	35	120	**6-8C40MLOS**	**6-8C40MLOSS**	250	200
12	1/2	3/8-19	13/16-16	22	9.5	9.9	19	28	38	27	108	**8C40MLOS**	**8C40MLOSS**	250	200
12	1/2	1/4-19	13/16-16	19	9.5	7.5	19	28	36	25	99	**8-4C40MLOS**	**8-4C40MLOSS**	250	200
12	1/2	1/2-14	13/16-16	27	9.5	12.3	27	31	49	35	239	**8-8C40MLOS**	**8-8C40MLOSS**	250	200
12	1/2	3/4-14	13/16-16	36	9.5	15.5	30	34	52	38	258	**8-12C40MLOS**	**8-12C40MLOSS**	250	200
14, 15,16	5/8	1/2-14	1-14	27	12.5	12.3	27	33	49	35	274	**10C40MLOS**	**10C40MLOSS**	250	200
14, 15,16	5/8	3/8-19	1-14	22	12.5	9.9	27	33	43	32	235	**10-6C40MLOS**	**10-6C40MLOSS**	250	200
14, 15,16	5/8	3/4-14	1-14	36	12.5	15.5	30	36	52	38	352	**10-12C40MLOS**	**10-12C40MLOSS**	250	200
14, 15,16	5/8	1-11	1-14	41	12.5	21.5	36	40	58	42	382	**10-16C40MLOS**	**10-16C40MLOSS**	250	200
18, 20	3/4	3/4-14	1 3/16-12	36	15.5	15.5	30	37	52	38	355	**12C40MLOS**	**12C40MLOSS**	250	200
18, 20	3/4	1/2-14	1 3/16-12	27	15.5	12.3	30	37	50	36	297	**12-8C40MLOS**	**12-8C40MLOSS**	250	200
18, 20	3/4	1-11	1 3/16-12	41	15.5	21.5	36	41	58	42	362	**12-16C40MLOS**	**12-16C40MLOSS**	250	200
25	1	1-11	1 7/16-12	41	20.5	21.5	36	42	58	42	551	**16C40MLOS**	**16C40MLOSS**	250	200
25	1	3/4-14	1 7/16-12	36	20.5	15.5	36	42	55	42	533	**16-12C40MLOS**	**16-12C40MLOSS**	250	200
25	1	1 1/4-11	1 7/16-12	50	20.5	27.5	41	45	61	45	758	**16-20C40MLOS**	**16-20C40MLOSS**	210	160
28, 30, 32	1 1/4	1 1/4-11	1 11/16-12	50	26.0	27.5	41	45	61	45	752	**20C40MLOS**	**20C40MLOSS**	210	160
28, 30, 32	1 1/4	1-11	1 11/16-12	41	26.0	21.5	41	45	61	45	712	**20-16C40MLOS**	**20-16C40MLOSS**	250	200
28, 30, 32	1 1/4	1 1/2-11	1 11/16-12	55	26.0	33.0	50	49	65	48	821	**20-24C40MLOS**	**20-24C40MLOSS**	140	140
35, 28	1 1/2	1 1/2-11	2-12	55	32.0	33.0	50	49	65	48	953	**24C40MLOS**	**24C40MLOSS**	140	140
35, 38	1 1/2	1 1/4-11	2-12	50	32.0	27.5	50	49	65	46	1098	**24-20C40MLOS**	**24-20C40MLOSS**	140	140

Product delivered with NBR TRAP seal. Replacement of TRAP seal is with a standard NBR O-ring – see page J73-J74.

Part numbers shown are part of our current manufacturing programme.

Imperial and metric parts may vary in hexagon dimensions.

$\frac{\text{PN (bar)}}{10} = \text{PN (MPa)}$

Do not create drawings from these dimensions, they are subject to change and ISO manufacturing allowances.
*JJ may vary in stainless steel

C8OMLO Male stud elbow

O-Lok® ORFS tube end / Male metric thread – O-ring + retaining ring

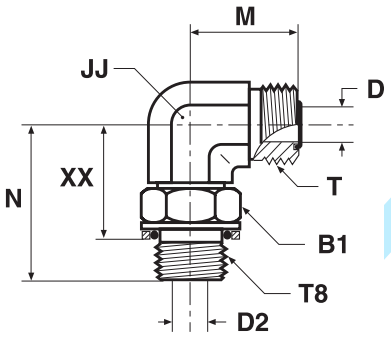

Tube O.D. mm	Tube O.D. in.	Thread metric T8	Thread UN/UNF-2A T	B1 mm	D mm	D2 mm	JJ* mm	M mm	N mm	XX mm	Weight (steel) g/1 piece	O-Lok® Steel	PN (bar)
6	1/4	M 12×1.5	9/16-18	17	4.5	4	14	22	33	22	52	**4M12C8OMLOS**	250
6	1/4	M 14×1.5	9/16-18	17	4.5	6	14	24	36	24	58	**4M14C8OMLOS**	250
8, 10	3/8	M 14×1.5	11/16-16	17	6.5	6	19	25	36	25	62	**6M14C8OMLOS**	250
8, 10	3/8	M 16×1.5	11/16-16	19	6.5	7	19	25	38	24	65	**6M16C8OMLOS**	250
12	1/2	M 16×1.5	13/16-16	19	9.5	7	19	28	38	25	82	**8M16C8OMLOS**	250
12	1/2	M 18×1.5	13/16-16	22	9.5	9	19	28	41	25	161	**8M18C8OMLOS**	250
14, 15, 16	5/8	M 18×1.5	1-14	22	12.5	9	27	33	48	32	185	**10M18C8OMLOS**	250
14, 15, 16	5/8	M 22×1.5	1-14	27	12.5	12	27	33	49	31	214	**10M22C8OMLOS**	250
18, 20	3/4	M 22×1.5	1 3/16-12	27	15.5	12	30	37	50	31	322	**12M22C8OMLOS**	250
18, 20	3/4	M 27×2.0	1 3/16-12	32	15.5	15	30	37	56	35	440	**12M27C8OMLOS**	250
25	1	M 33×2.0	1 7/16-12	38	20.5	20	36	42	59	39	501	**16M33C8OMLOS**	140
28, 30, 32	1 1/4	M 42×2.0	1 11/16-12	50	26.0	26	41	45	63	42	561	**20M42C8OMLOS**	140
35, 38	1 1/2	M 48×2.0	2-12	55	32.0	32	50	49	72	47	684	**24M48C8OMLOS**	140

Product delivered with NBR TRAP seal. Replacement of TRAP seal is with a standard NBR O-ring – see page J73-J74.

Part numbers shown are part of our current manufacturing programme.

Imperial and metric parts may vary in hexagon dimensions.

$$\frac{\text{PN (bar)}}{10} = \text{PN (MPa)}$$

Do not create drawings from these dimensions, they are subject to change and ISO manufacturing allowances.
*JJ may vary in stainless steel

Kovat

CLO Male stud elbow

O-Lok® ORFS tube end / Male NPTF* thread (SAE J476)

*Stainless Steel = NPT to prevent galling

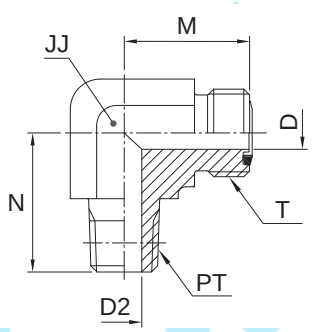

Tube O.D. mm	Tube O.D. in.	Thread NPTF PT	Thread UN/UNF-2A T	D mm	D2 mm	JJ* mm	M mm	N mm	Weight (steel) g/1 piece	O-Lok® Steel	O-Lok® Stainless Steel	PN (bar) S	PN (bar) SS
6	1/4	1/8-27	9/16-18	4.5	4.8	14	22	20	39	**4 CLO-S**	**4 CLO-SS**	420	420
6	1/4	1/4-18	9/16-18	4.5	7.1	14	22	28	50	**4-4 CLO-S**	**4-4 CLO-SS**	420	420
8, 10	3/8	1/4-18	11/16-16	6.5	7.1	19	25	28	75	**6 CLO-S**	**6 CLO-SS**	420	420
8, 10	3/8	3/8-18	11/16-16	6.5	10.3	19	25	31	81	**6-6 CLO-S**	**6-6 CLO-SS**	420	420
8, 10	3/8	1/2-14	11/16-16	6.5	13.5	22	29	37	84	**6-8 CLO-S**	**6-8 CLO-SS**	420	420
12	1/2	3/8-18	13/16-16	9.5	10.3	19	28	31	89	**8 CLO-S**	**8 CLO-SS**	420	420
12	1/2	1/2-14	13/16-16	9.5	13.5	22	28	37	125	**8-8 CLO-S**	**8-8 CLO-SS**	420	420
12	1/2	3/4-14	13/16-16	9.5	18.3	27	34	40	168	**8-12 CLO-S**	**8-12 CLO-SS**	280	280
14, 15, 16	5/8	1/2-14	1-14	12.5	13.5	27	33	37	154	**10 CLO-S**	**10 CLO-SS**	420	420
14, 15, 16	5/8	3/4-14	1-14	12.5	18.3	27	36	40	237	**10-12 CLO-S**	**10-12 CLO-SS**	280	280
18, 20	3/4	3/4-14	1 3/16-12	15.5	18.3	30	37	40	246	**12 CLO-S**	**12 CLO-SS**	280	280
18, 20	3/4	1/2-14	1 3/16-12	15.5	13.5	30	37	40	257	**12-8 CLO-S**	**12-8 CLO-SS**	420	420
18, 20	3/4	1-11.5	1 3/16-12	15.5	23.8	33	41	50	363	**12-16 CLO-S**	**12-16 CLO-SS**	210	210
25	1	1-11.5	1 7/16-12	20.5	23.8	36	42	50	387	**16 CLO-S**	**16 CLO-SS**	210	210
25	1	3/4-14	1 7/16-12	20.5	18.3	36	42	45	401	**16-12 CLO-S**	**16-12 CLO-SS**	280	280
28, 30, 32	1 1/4	1 1/4-11.5	1 11/16-12	26.0	31.8	41	45	61	469	**20 CLO-S**	**20 CLO-SS**	175	175
35, 38	1 1/2	1 1/2-11.5	2-12	32.0	38.1	48	49	67	603	**24 CLO-S**	**24 CLO-SS**	175	175

Product delivered with NBR TRAP seal. Replacement of TRAP seal is with a standard NBR O-ring – see page J73-J74.

Part numbers shown are part of our current manufacturing programme.

Imperial and metric parts may vary in hexagon dimensions.

$\frac{\text{PN (bar)}}{10}$ = PN (MPa)

Do not create drawings from these dimensions, they are subject to change and ISO manufacturing allowances.
*JJ may vary in stainless steel

V87OMLO 45° male stud elbow

O-Lok® ORFS tube end / Male metric thread – O-ring (ISO 6149-2)
SAE 52M0387 ISO 8434-3 SDE45

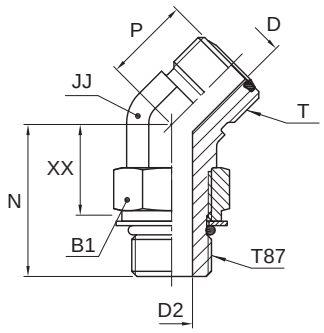

Tube O.D. mm	Tube O.D. in.	Thread metric T87	Thread UN/UNF-2A T	B1 mm	D mm	D2 mm	JJ* mm	P mm	N mm	XX mm	Weight (steel) g/1 piece	O-Lok® Steel	O-Lok® Stainless Steel	PN (bar) S	PN (bar) SS
6	1/4	M 12×1.5	9/16-18	17	4.5	4	14	16	30	19	44	**4M12V87OMLOS**	**4M12V87OMLOSS**	420	420
8, 10	3/8	M 16×1.5	11/16-16	22	6.5	7	19	19	33	20	82	**6M16V87OMLOS**	**6M16V87OMLOSS**	420	420
12	1/2	M 18×1.5	13/16-16	24	9.5	9	19	20	37	22	110	**8M18V87OMLOS**	**8M18V87OMLOSS**	420	420
14, 15, 16	5/8	M 22×1.5	1-14	27	12.5	12	27	23	44	29	190	**10M22V87OMLOS**	**10M22V87OMLOSS**	420	420
18, 20	3/4	M 27×2.0	1 3/16-12	32	15.5	15	30	26	50	31	288	**12M27V87OMLOS**	**12M27V87OMLOSS**	420	420
25	1	M 33×2.0	1 7/16-12	41	20.5	20	36	30	52	33	300	**16M33V87OMLOS**	**16M33V87OMLOSS**	420	420
28, 30, 32	1 1/4	M 42×2.0	1 11/16-12	50	26.0	26	41	32	54	35	444	**20M42V87OMLOS**	**20M42V87OMLOSS**	280	280
35, 38	1 1/2	M 48×2.0	2-12	55	32.0	32	50	37	56	35	569	**24M48V87OMLOS**		280	—

Product delivered with NBR TRAP seal. Replacement of TRAP seal is with a standard NBR O-ring – see page J73-J74.

Part numbers shown are part of our current manufacturing programme.

Imperial and metric parts may vary in hexagon dimensions.

$\frac{\text{PN (bar)}}{10}$ = PN (MPa)

Do not create drawings from these dimensions, they are subject to change and ISO manufacturing allowances.
*JJ may vary in stainless steel

Kovaz

V5OMLO 45° male stud elbow

O-Lok® ORFS tube end / Adjustable UN/UNF thread O-ring (ISO 11926)
SAE 520320

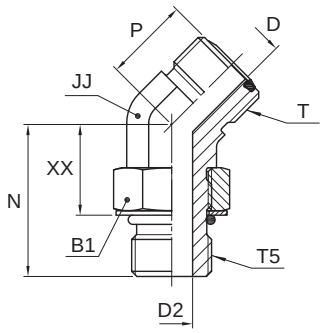

Tube O.D. mm	Tube O.D. in.	Thread UN/UNF-2A T5	Thread UN/UNF-2A T	B1 mm	D mm	D2 mm	JJ* mm	P mm	N mm	XX mm	Weight (steel) g/1 piece	O-Lok® Steel	O-Lok® Stainless Steel	PN (bar) S	PN (bar) SS
6	1/4	7/16-20	9/16-18	17	4.5	4.5	14	16	30	19	45		**4V50ML0SS**		420
6	1/4	7/16-20	9/16-18	16	4.5	4.5	14	16	30	19	45	**4 V50L0-S**		630	
6	1/4	9/16-18	9/16-18	19	4.5	7.5	19	17	33	20	76	**4-6 V50L0-S**	**4-6V50ML0SS**	630	420
8, 10	3/8	9/16-18	11/16-16	19	6.5	7.5	19	19	33	20	83	**6 V50L0-S**	**6V50ML0SS**	630	420
8, 10	3/8	7/16-20	11/16-16	16	6.5	4.5	19	19	31	20	64	**6-4 V50L0-S**	**6-4V50ML0SS**	630	420
8, 10	3/8	3/4-16	11/16-16	24	6.5	10.0	19	19	36	22	96	**6-8 V50L0-S**	**6-8V50ML0SS**	630	420
12	1/2	3/4-16	13/16-16	24	9.5	10.0	19	20	36	23	117	**8 V50L0-S**	**8V50ML0SS**	630	420
12	1/2	9/16-18	13/16-16	19	9.5	7.5	19	20	32	20	71	**8-6 V50L0-S**	**8-6V50ML0SS**	630	420
12	1/2	7/8-14	13/16-16	27	9.5	12.5	19	21	45	22	147	**8-10 V50L0-S**	**8-10V50ML0SS**	420	420
14, 15, 16	5/8	7/8-14	1-14	27	12.5	12.5	27	23	45	28	194	**10 V50L0-S**	**10V50ML0SS**	420	420
14, 15, 16	5/8	3/4-16	1-14	24	12.5	10.0	27	23	40	26	192	**10-8 V50L0-S**	**10-8V50ML0SS**	420	420
14, 15, 16	5/8	1 1/16-12	1-14	35	12.5	15.5	30	24	50	31	207	**10-12 V50L0-S**	**10-12V50ML0SS**	420	420
18, 20	3/4	1 1/16-12	1 3/16-12	35	15.5	15.5	30	26	50	31	294	**12V50ML0-S**	**12V50ML0SS**	420	420
18, 20	3/4	7/8-14	1 3/16-12	27	15.5	12.5	30	26	46	29	219	**12-10 V50L0-S**	**12-10V50ML0SS**	420	420
18, 20	3/4	1 5/16-12	1 3/16-12	41	15.5	21.5	36	30	52	33	322	**12-16 V50L0-S**	**12-16V50ML0SS**	420	380
22, 25	1	1 5/16-12	1 7/16-12	41	20.5	21.5	36	30	52	33	394	**16V50ML0S**	**16V50ML0SS**	420	380
22, 25	1	1 1/16-12	1 7/16-12	36	20.5	15.5	36	30	52	33	337		**16-12V50ML0SS**		420
22, 25	1	1 1/16-12	1 7/16-12	35	20.5	15.5	36	30	52	33	337	**16-12 V50L0-S**		420	
22, 25	1	1 5/8-12	1 7/16-12	48	20.5	27.5	41	32	54	35	511	**16-20 V50L0-S**	**16-20V50ML0SS**	420	280
28, 30, 32	1 1/4	1 5/8-12	1 11/16-12	48	26.0	27.5	41	32	54	35	447	**20 V50L0-S**	**20V50ML0SS**	350	280
35, 38	1 1/2	1 7/8-12	2-12	54	32.0	33.5	48	37	54	35	571	**24 V50L0-S**	**24V50ML0SS**	280	280

Product delivered with NBR TRAP seal. Replacement of TRAP seal is with a standard NBR O-ring – see page J73-J74.

Part numbers shown are part of our current manufacturing programme.

Imperial and metric parts may vary in hexagon dimensions.

$\frac{\text{PN (bar)}}{10}$ = PN (MPa)

Do not create drawings from these dimensions, they are subject to change and ISO manufacturing allowances.
*JJ may vary in stainless steel

V4OMLO 45° male stud elbow

O-Lok® ORFS tube end / Adjustable BSPP thread O-ring + retaining ring (ISO 1179)

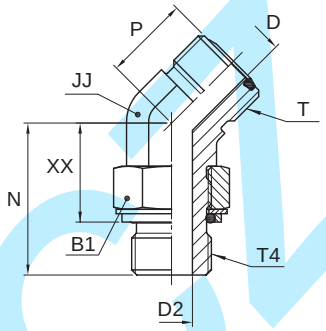

Tube O.D. mm	Tube O.D. in.	Thread BSPP T4	Thread UN/UNF-2A T	B1 mm	D mm	D2 mm	JJ* mm	P mm	N mm	XX mm	Weight (steel) g/1 piece	O-Lok® Steel	O-Lok® Stainless Steel	PN (bar) S	PN (bar) SS
6	1/4	1/8-28	9/16-18	14	4.5	4.4	14	16	28	18	38	**4V40MLOS**	**4V40MLOSS**	250	250
6	1/4	1/4-19	9/16-18	19	4.5	7.5	19	17	33	22	43	**4-4V40MLOS**	**4-4V40MLOSS**	250	200
8, 10	3/8	1/4-19	11/16-16	19	6.5	7.5	19	19	32	20	83	**6V40MLOS**	**6V40MLOSS**	250	200
8, 10	3/8	3/8-19	11/16-16	22	6.5	9.9	19	19	34	22	95	**6-6V40MLOS**	**6-6V40MLOSS**	250	200
8, 10	3/8	1/2-14	11/16-16	27	6.5	12.3	27	19	43	29	107	**6-8V40MLOS**	**6-8V40MLOSS**	250	200
12	1/2	3/8-19	13/16-16	22	9.5	9.9	19	20	34	22	117	**8V40MLOS**	**8V40MLOSS**	250	200
12	1/2	1/2-14	13/16-16	27	9.5	12.3	27	21	43	30	196	**8-8V40MLOS**	**8-8V40MLOSS**	250	200
14, 15, 16	5/8	1/2-14	1-14	27	12.5	12.3	27	23	43	29	191	**10V40MLOS**	**10V40MLOSS**	250	200
14, 15, 16	5/8	3/4-14	1-14	36	12.5	15.5	30	24	46	32	227	**10-12V40MLOS**	**10-12V40MLOSS**	250	200
18, 20	3/4	3/4-14	1 3/16-12	36	15.5	15.5	30	26	46	32	294	**12V40MLOS**	**12V40MLOSS**	250	200
18, 20	3/4	1-11	1 3/16-12	41	15.5	21.5	36	30	51	34	325	**12-16V40MLOS**	**12-16V40MLOSS**	250	200
25	1	1-11	1 7/16-12	41	20.5	21.5	36	30	51	34	394	**16V40MLOS**	**16V40MLOSS**	250	200
28, 30, 32	1 1/4	1 1/4-11	1 11/16-12	50	26.0	27.5	41	32	52	37	430	**20V40MLOS**	**20V40MLOSS**	210	160
35, 38	1 1/2	1 1/2-11	2-12	55	32.0	33.0	50	37	52	37	551	**24V40MLOS**	**24V40MLOSS**	140	140

Product delivered with NBR TRAP seal. Replacement of TRAP seal is with a standard NBR O-ring – see page J73-J74.

Part numbers shown are part of our current manufacturing programme.

Imperial and metric parts may vary in hexagon dimensions.

$$\frac{\text{PN (bar)}}{10} = \text{PN (MPa)}$$

Do not create drawings from these dimensions, they are subject to change and ISO manufacturing allowances.
*JJ may vary in stainless steel

KOVACH

V8OMLO 45° male stud elbow

O-Lok® ORFS tube end / Male metric thread – O-ring + retaining ring

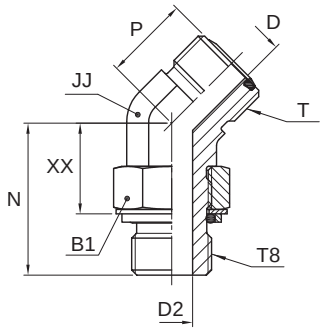

Tube O.D. mm	in.	Thread metric T8	Thread UN/UNF-2A T	B1 mm	D mm	D2 mm	JJ* mm	P mm	N mm	XX mm	Weight (steel) g/1 piece	O-Lok® Steel	PN (bar)
6	1/4	M 12×1.5	9/16-18	17	4.5	4	14	16	30	19	44	**4M12V8OMLOS**	250
10	3/8	M 16×1.5	11/16-16	19	6.5	7	19	19	33	19	82	**6M16V8OMLOS**	250
12	1/2	M 14×1.5	13/16-16	17	9.5	6	19	20	32	21	92	**8M14V8OMLOS**	250
12	1/2	M 18×1.5	13/16-16	22	9.5	9	19	20	37	21	110	**8M18V8OMLOS**	250
14, 15, 16	5/8	M 18×1.5	1-14	22	12.5	9	27	24	43	27	160	**10M18V8OMLOS**	250
14, 15, 16	5/8	M 22×1.5	1-14	27	12.5	12	27	23	44	27	190	**10M22V8OMLOS**	250
18, 20	3/4	M 27×2.0	1 3/16-12	32	15.5	15	30	26	50	30	288	**12M27V8OMLOS**	250
25	1	M 33×2.0	1 7/16-12	38	20.5	20	36	30	52	32	300	**16M33V8OMLOS**	140
28, 30, 32	1 1/4	M 42×2.0	1 11/16-12	50	26.0	26	41	32	54	33	444	**20M42V8OMLOS**	140
35, 38	1 1/2	M 48×2.0	2-12	55	32.0	32	50	37	56	32	568	**24M48V8OMLOS**	140

Product delivered with NBR TRAP seal. Replacement of TRAP seal is with a standard NBR O-ring – see page J73-J74.

Part numbers shown are part of our current manufacturing programme.

Imperial and metric parts may vary in hexagon dimensions.

$$\frac{\text{PN (bar)}}{10} = \text{PN (MPa)}$$

Do not create drawings from these dimensions, they are subject to change and ISO manufacturing allowances.
*JJ may vary in stainless steel

kovaz

S87OMLO Male stud branch tee

O-Lok® ORFS tube ends / Adjustable metric thread – O-ring (ISO 6149)
SAE 52M0489 ISO 8434-3 SDBT

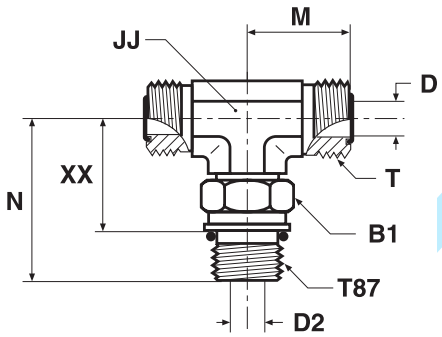

Tube O.D. mm	Tube O.D. in.	Thread metric T87	Thread UN/UNF-2A T	B1 mm	D mm	D2 mm	JJ* mm	M mm	N mm	XX mm	Weight (steel) g/1 piece	O-Lok® Steel	O-Lok® Stainless Steel	PN (bar) S	PN (bar) SS
6	1/4	M 12×1.5	9/16-18	17	4.5	4	14	22	33	21	66	**4M12S870ML0S**	**4M12S870ML0SS**	420	420
8, 10	3/8	M 16×1.5	11/16-16	22	6.5	7	19	25	37	24	131	**6M16S870ML0S**	**6M16S870ML0SS**	420	420
12	1/2	M 18×1.5	13/16-16	24	9.5	9	19	28	41	26	187	**8M18S870ML0S**	**8M18S870ML0SS**	420	420
14, 15, 16	5/8	M 22×1.5	1-14	27	12.5	12	27	33	49	33	283	**10M22S870ML0S**	**10M22S870ML0SS**	420	420
18, 20	3/4	M 27×2.0	1 3/16-12	32	15.5	15	30	37	55	36	549	**12M27S870ML0S**	**12M27S870ML0SS**	420	420
25	1	M 33×2.0	1 7/16-12	41	20.5	20	36	42	59	41	565	**16M33S870ML0S**	**16M33S870ML0SS**	420	420
28, 30, 32	1 1/4	M 42×2.0	1 11/16-12	50	26.0	26	41	45	62	43	824	**20M42S870ML0S**	**20M42S870ML0SS**	280	280
35, 38	1 1/2	M 48×2.0	2-12	55	32.0	32	48	49	69	50	940	**24M48S870ML0S**		280	—

Product delivered with NBR TRAP seal. Replacement of TRAP seal is with a standard NBR O-ring – see page J73-J74.

Part numbers shown are part of our current manufacturing programme.

Imperial and metric parts may vary in hexagon dimensions.

$\frac{\text{PN (bar)}}{10}$ = PN (MPa)

Do not create drawings from these dimensions, they are subject to change and ISO manufacturing allowances.
*JJ may vary in stainless steel

Kovaz

S5OMLO Male stud branch tee

O-Lok® ORFS tube end / Adjustable UN/UNF thread O-ring (ISO 11926)
SAE 520429

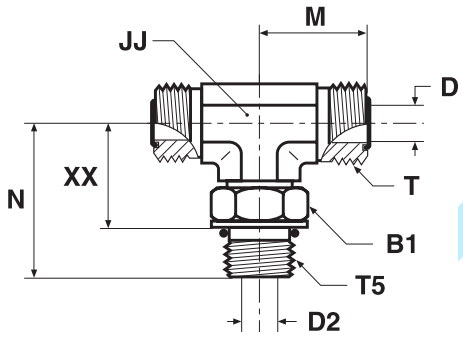

Tube O.D. mm	Tube O.D. in.	Thread UN/UNF-2A T5	Thread UN/UNF-2A T	B1 mm	D mm	D2 mm	JJ* mm	M mm	N mm	XX mm	Weight (steel) g/1 piece	O-Lok® Steel	O-Lok® Stainless Steel	PN (bar) S	PN (bar) SS
6	1/4	7/16-20	9/16-18	16	4.5	4.5	14	22	33	21	67	**4 S50LO-S**	**4 S50LO-SS**	420	420
8, 10	3/8	9/16-18	11/16-16	19	6.5	7.5	19	25	37	24	131	**6S50MLOS**	**6 S50LO-SS**	420	420
12	1/2	3/4-16	13/16-16	24	9.5	10.0	19	28	41	26	187	**8 S50LO-S**	**8 S50LO-SS**	420	420
14, 15, 16	5/8	7/8-14	1-14	27	12.5	12.5	27	33	50	33	279	**10 S50LO-S**	**10 S50LO-SS**	420	420
18, 20	3/4	1 1/16-12	1 3/16-12	35	15.5	15.5	30	37	55	36	441	**12 S50LO-S**	**12 S50LO-SS**	420	420
25	1	1 5/16-12	1 7/16-12	41	20.5	21.5	37	42	60	41	539	**16 S50LO-S**	**16 S50LO-SS**	380	380
28, 30, 32	1 1/4	1 5/8-12	1 11/16-12	48	26.0	27.5	41	45	62	43	851	**20 S50LO-S**		280	—
35, 38	1 1/2	1 7/8-12	2-12	54	32.0	33.5	48	49	66	47	942	**24 S50LO-S**		280	—

Product delivered with NBR TRAP seal. Replacement of TRAP seal is with a standard NBR O-ring – see page J73-J74.

Part numbers shown are part of our current manufacturing programme.

Imperial and metric parts may vary in hexagon dimensions.

$\frac{\text{PN (bar)}}{10}$ = PN (MPa)

Do not create drawings from these dimensions, they are subject to change and ISO manufacturing allowances.

*JJ may vary in stainless steel.

Kovaz

S4OMLO Male stud branch tee

O-Lok® ORFS tube end / Adjustable BSPP thread O-ring + retaining ring (ISO 1179)

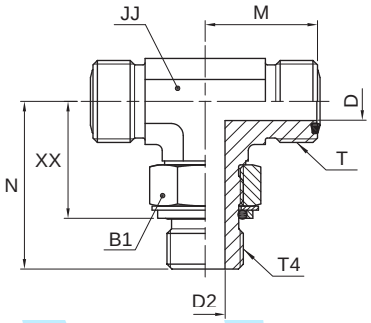

Tube O.D. mm	Tube O.D. in.	Thread BSPP T4	Thread UN/UNF-2A T	B1 mm	D mm	D2 mm	JJ* mm	M mm	N mm	XX mm	Weight (steel) g/1 piece	O-Lok® Steel	O-Lok® Stainless Steel	PN (bar) S	PN (bar) SS
6	1/4	1/8-28	9/16-18	14	4.5	4.4	14	22	30	21	69	**4S4OMLOS**	**4S4OMLOSS**	250	250
6	1/4	1/4-19	9/16-18	19	4.5	7.5	19	24	36	25	97	**4-4-4S4OMLOS**	**4-4-4S4OMLOSS**	250	200
8, 10	3/8	1/4-19	11/16-16	19	6.5	7.5	19	25	36	25	127	**6S4OMLOS**	**6S4OMLOSS**	250	200
8, 10	3/8	3/8-19	11/16-16	22	6.5	9.9	19	27	38	27	126	**6-6-6S4OMLOS**	**6-6-6S4OMLOSS**	250	200
12	1/2	3/8-19	13/16-16	22	9.5	9.9	19	28	38	27	146	**8S4OMLOS**	**8S4OMLOSS**	250	200
12	1/2	1/2-14	13/16-16	27	9.5	12.3	27	31	49	35	174	**8-8-8S4OMLOS**	**8-8-8S4OMLOSS**	250	200
14, 15, 16	5/8	1/2-14	1-14	27	12.5	12.3	27	33	49	35	288	**10S4OMLOS**	**10S4OMLOSS**	250	200
14, 15, 16	5/8	3/4-14	1-14	36	12.5	15.5	30	36	52	38	314	**10-10-12S4OMLOS**	**10-10-12S4OMLOSS**	250	200
18, 20	3/4	3/4-14	1 3/16-12	36	15.5	15.5	30	37	52	38	531	**12S4OMLOS**	**12S4OMLOSS**	250	200
22, 25	1	1-11	1 7/16-12	41	20.5	21.5	36	42	58	42	600	**16S4OMLOS**	**16S4OMLOSS**	250	200
28, 30, 32	1 1/4	1 1/4-11	1 11/16-12	50	26.0	27.5	41	45	61	45	850	**20S4OMLOS**	**20S4OMLOSS**	210	160
35, 38	1 1/2	1 1/2-11	2-12	55	32.0	33.0	50	49	65	50	940	**24S4OMLOS**		140	—

Product delivered with NBR TRAP seal. Replacement of TRAP seal is with a standard NBR O-ring – see page J73-J74.

Part numbers shown are part of our current manufacturing programme.

Imperial and metric parts may vary in hexagon dimensions.

$\frac{\text{PN (bar)}}{10}$ = PN (MPa)

Do not create drawings from these dimensions, they are subject to change and ISO manufacturing allowances.

*JJ may vary in stainless steel.

Kovai

S8OMLO Male stud branch tee

O-Lok® ORFS tube end / Adjustable metric thread – O-ring + retaining ring

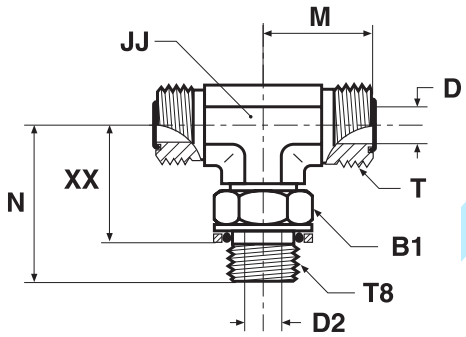

Tube O.D. mm	Tube O.D. in.	Thread metric T8	Thread UN/UNF-2A T	B1 mm	D mm	D2 mm	JJ* mm	M mm	N mm	XX mm	Weight (steel) g/1 piece	O-Lok® Steel	PN (bar)
6	1/4	M 12×1.5	9/16-18	17	4.5	4	14	22	33	22	66	**4M12S8OMLOS**	250
8, 10	3/8	M 16×1.5	11/16-16	19	6.5	7	19	25	38	24	131	**6M16S8OMLOS**	250
12	1/2	M 18×1.5	13/16-16	22	9.5	9	19	28	41	25	187	**8M18S8OMLOS**	250
14, 15, 16	5/8	M 22×1.5	1-14	27	12.5	12	27	33	49	31	283	**10M22S8OMLOS**	250
18, 20	3/4	M 27×2.0	1 3/16-12	32	15.5	15	30	37	55	35	550	**12M27S8OMLOS**	250
25	1	M 33×2.0	1 7/16-12	38	20.5	20	36	42	59	39	566	**16M33S8OMLOS**	140
28, 30, 32	1 1/4	M 42×2.0	1 11/16-12	50	26.0	26	41	45	62	41	824	**20M42S8OMLOS**	140
35, 38	1 1/2	M 48×2.0	2-12	55	32.0	32	48	49	72	47	940	**24M48S8OMLOS**	140

Product delivered with NBR TRAP seal. Replacement of TRAP seal is with a standard NBR O-ring – see page J73-J74.

Part numbers shown are part of our current manufacturing programme.

Imperial and metric parts may vary in hexagon dimensions.

$\frac{\text{PN (bar)}}{10}$ = PN (MPa)

Do not create drawings from these dimensions, they are subject to change and ISO manufacturing allowances.

*JJ may vary in stainless steel.

Kovaz

R87OMLO Male stud run tee

O-Lok® ORFS tube ends / Adjustable metric thread – O-ring (ISO 6149)
SAE 52M0488 ISO 8434-3 SDRT

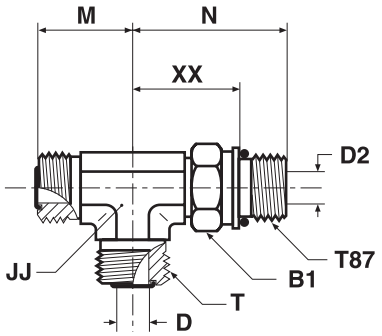

Tube O.D. mm	Tube O.D. in.	Thread metric T87	Thread UN/UNF-2A T	B1 mm	D mm	D2 mm	JJ* mm	M mm	N mm	XX mm	Weight (steel) g/1 piece	O-Lok® Steel	O-Lok® Stainless Steel	PN (bar) S	PN (bar) SS
6	1/4	M 12×1.5	9/16-18	17	4.5	4	14	22	33	21	66	**4M12R87OMLOS**	**4M12R87OMLOSS**	420	420
6	1/4	M 14×1.5	11/16-16	19	6.5	6	19	25	36	21	129	**6M14R87OMLOS**	**6M14R87OMLOSS**	420	420
8, 10	3/8	M 16×1.5	11/16-16	22	6.5	7	19	25	38	24	131	**6M16R87OMLOS**	**6M16R87OMLOSS**	420	420
12	1/2	M 18×1.5	13/16-16	24	9.5	9	19	28	41	26	187	**8M18R87OMLOS**	**8M18R87OMLOSS**	420	420
14, 15, 16	5/8	M 22×1.5	1-14	27	12.5	12	27	33	49	33	283	**10M22R87OMLOS**	**10M22R87OMLOSS**	420	420
18, 20	3/4	M 27×2.0	1 3/16-12	32	15.5	15	30	37	55	36	549	**12M27R87OMLOS**	**12M27R87OMLOSS**	420	420
25	1	M 33×2.0	1 7/16-12	41	20.5	20	36	42	59	41	565	**16M33R87OMLOS**	**16M33R87OMLOSS**	420	420
28, 30, 32	1 1/4	M 42×2.0	1 11/16-12	50	26.0	26	41	45	63	43	824	**20M42R87OMLOS**	**20M42R87OMLOSS**	280	280
35, 38	1 1/2	M 48×2.0	2-12	55	32.0	32	48	49*1	69	50	940	**24M48R87OMLOS**		280	—

Product delivered with NBR TRAP seal. Replacement of TRAP seal is with a standard NBR O-ring – see page J73-J74.

Part numbers shown are part of our current manufacturing programme.

Imperial and metric parts may vary in hexagon dimensions.

$\frac{\text{PN (bar)}}{10}$ = PN (MPa)

Do not create drawings from these dimensions, they are subject to change and ISO manufacturing allowances.

*JJ may vary in stainless steel.

*1M=52 in stainless steel.

Kovaz

R5OMLO Male stud run tee

O-Lok® ORFS tube end / Adjustable UN/UNF thread O-ring (ISO 11926)
SAE 520428

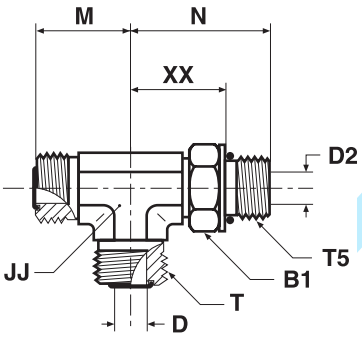

Tube O.D. mm	Tube O.D. in.	Thread UN/UNF-2A T5	Thread UN/UNF-2A T	B1 mm	D mm	D2 mm	JJ* mm	M mm	N mm	XX mm	Weight (steel) g/1 piece	O-Lok® Steel	O-Lok® Stainless Steel	PN (bar) S	PN (bar) SS
6	1/4	7/16-20	9/16-18	16	4.5	4.5	14	22	33	21	67	**4 R5OLO-S**	**4 R5OLO-SS**	420	420
6	1/4	9/16-18	9/16-18	19	4.5	4.0	19	24	37	24	133	**4-6-4R5OMLOS**	**4-6-4 ROLO-SS**	420	420
8, 10	3/8	9/16-18	11/16-16	19	6.5	6.5	19	25	37	24	131	**6 R5OLO-S**	**6 R5OLO-SS**	420	420
12	1/2	3/4-16	13/16-16	24	9.5	9.5	19	28	41	26	187	**8 R5OLO-S**	**8 R5OLO-SS**	420	420
12	1/2	7/8-14	13/16-16	27	9.5	12.5	27	32	50	26	286	**8-10-8 R5OLO-S**	**8-10-8 R5OLO-SS**	420	420
14, 15, 16	5/8	7/8-14	1-14	27	12.5	12.5	27	33	50	33	288	**10 R5OLO-S**	**10 R5OLO-SS**	420	420
18, 20	3/4	1 1/16-12	1 3/16-12	36	15.5	15.5	30	37	55	36	558	**12R5OMLOS**	**12 R5OLO-SS**	420	420
18, 20	3/4	1 5/16-12	1 3/16-12	41	15.5	21.5	36	41	60	41	560	**12-16-12 R5OLO-S**	**12-16-12 R5OLO-SS**	380	380
25	1	1 5/16-12	1 7/16-12	41	20.5	20.5	36	42	60	41	566	**16 R5OLO-S**	**16 R5OLO-SS**	380	380
28, 30, 32	1 1/4	1 5/8-12	1 11/16-12	48	26.0	27.5	41	45	62	43	825	**20 R5OLO-S**	**20 R5OLO-SS**	280	280
35, 38	1 1/2	1 7/8-12	2-12	54	32.0	32.0	48	49*1	66	47	942	**24 R5OLO-S**	**24 R5OLO-SS**	280	280

Product delivered with NBR TRAP seal. Replacement of TRAP seal is with a standard NBR O-ring – see page J73-J74.

Part numbers shown are part of our current manufacturing programme.

Imperial and metric parts may vary in hexagon dimensions.

$\frac{\text{PN (bar)}}{10}$ = PN (MPa)

Do not create drawings from these dimensions, they are subject to change and ISO manufacturing allowances.

*JJ may vary in stainless steel.

*1M=52 in stainless steel.

J

R4OMLO Male stud run tee

O-Lok® ORFS tube ends / Adjustable BSPP thread O-ring + retaining ring (ISO 1179)

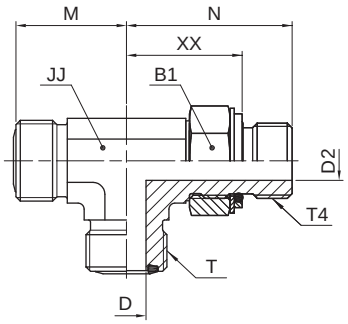

Tube O.D. mm	Tube O.D. in.	Thread BSPP T4	Thread UN/UNF-2A T	B1 mm	D mm	D2 mm	JJ* mm	M mm	N mm	XX mm	Weight (steel) g/1 piece	O-Lok® Steel	O-Lok® Stainless Steel	PN (bar) S	PN (bar) SS
6	1/4	1/8-28	9/16-18	14	4.5	4.5	14	22	30	20	69	**4R4OMLOS**	**4R4OMLOSS**	250	250
6	1/4	1/4-19	9/16-18	19	4.5	7.5	19	24	36	25	97	**4-4-4R4OMLOS**	**4-4-4R4OMLOSS**	250	200
8, 10	3/8	1/4-19	11/16-16	19	6.5	7.5	19	25	36	25	127	**6R4OMLOS**	**6R4OMLOSS**	250	200
8, 10	3/8	3/8-19	11/16-16	22	6.5	9.9	19	27	38	27	126	**6-6-6R4OMLOS**	**6-6-6R4OMLOSS**	250	200
12	1/2	3/8-19	13/16-16	22	9.5	9.9	19	28	38	27	146	**8R4OMLOS**	**8R4OMLOSS**	250	200
12	1/2	1/2-14	13/16-16	27	9.5	12.3	27	31	49	33	174	**8-8-8R4OMLOS**	**8-8-8R4OMLOSS**	250	200
14, 15, 16	5/8	1/2-14	1-14	27	12.5	12.3	27	33	49	33	288	**10R4OMLOS**	**10R4OMLOSS**	250	200
18, 20	3/4	3/4-14	1 3/16-12	36	15.5	15.5	30	37	52	36	531	**12R4OMLOS**	**12R4OMLOSS**	250	200
18, 20	3/4	1-11	1 3/16-12	41	15.5	21.5	36	41	58	40	559	**12-16-12R4OMLOS**	**12-16-12R4OMLOSS**	250	200
25	1	1-11	1 7/16-12	41	20.5	21.5	36	42	58	40	553	**16R4OMLOS**	**16R4OMLOSS**	250	200
28, 30, 32	1 1/4	1 1/4-11	1 11/16-12	50	26.0	27.5	41	45	61	42	824	**20R4OMLOS**	**20R4OMLOSS**	210	160
35, 38	1 1/2	1 1/2-11	2-12	55	32.0	32.0	50	49*1	65	48	940	**24R4OMLOS**		140	—

Product delivered with NBR TRAP seal. Replacement of TRAP seal is with a standard NBR O-ring – see page J73-J74.

Part numbers shown are part of our current manufacturing programme.

Imperial and metric parts may vary in hexagon dimensions.

$\frac{\text{PN (bar)}}{10}$ = PN (MPa)

Do not create drawings from these dimensions, they are subject to change and ISO manufacturing allowances.

*JJ may vary in stainless steel.

*1M=52 in stainless steel.

Kovai

R8OMLO Male stud run tee

O-Lok® ORFS tube end / Adjustable metric thread – O-ring + retaining ring

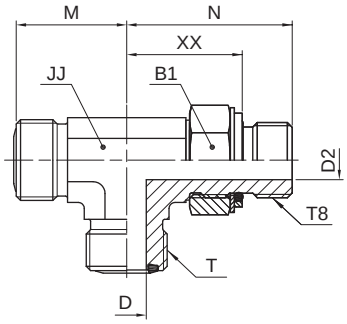

Tube O.D. mm	Tube O.D. in.	Thread metric T8	Thread UN/UNF-2A T	B1 mm	D mm	D2 mm	JJ* mm	M mm	N mm	XX mm	Weight (steel) g/1 piece	O-Lok® Steel	PN (bar)
6	1/4	M 12×1.5	9/16-18	17	4.5	4	14	22	33	22	66	**4M12R8OMLOS**	250
8, 10	3/8	M 16×1.5	11/16-16	19	6.5	7	19	25	38	24	131	**6M16R8OMLOS**	250
12	1/2	M 18×1.5	13/16-16	22	9.5	9	19	28	41	25	187	**8M18R8OMLOS**	250
14, 15, 16	5/8	M 22×1.5	1-14	27	12.5	12	27	33	49	31	283	**10M22R8OMLOS**	250
18, 20	3/4	M 27×2.0	1 3/16-12	32	15.5	15	30	37	55	35	550	**12M27R8OMLOS**	250
25	1	M 33×2.0	1 7/16-12	38	20.5	20	36	42	59	39	566	**16M33R8OMLOS**	140
28, 30, 32	1 1/4	M 42×2.0	1 11/16-12	50	26.0	26	41	45	62	41	824	**20M42R8OMLOS**	140
35, 38	1 1/2	M 48×2.0	2-12	55	32.0	32	48	49*1	72	47	940	**24M48R8OMLOS**	140

Product delivered with NBR TRAP seal. Replacement of TRAP seal is with a standard NBR O-ring – see page J73-J74.

Part numbers shown are part of our current manufacturing programme.

Imperial and metric parts may vary in hexagon dimensions.

$\frac{\text{PN (bar)}}{10}$ = PN (MPa)

Do not create drawings from these dimensions, they are subject to change and ISO manufacturing allowances.

*JJ may vary in stainless steel.

*1M=52 in stainless steel.

G87MLO Pressure gauge connector

O-Lok® ORFS tube end / Female metric thread – O-ring (ISO 6149-1)
suitably for EMA link

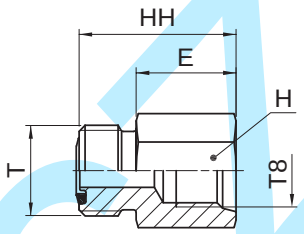

Tube O.D. mm	Tube O.D. in.	Thread metric T8	Thread UN/UNF-2A T	E mm	H mm	HH mm	Weight (steel) g/1 piece	O-Lok® Steel	O-Lok® Stainless Steel	PN (bar) S	PN (bar) SS
6	1/4	M 14×1.5	9/16-18	19	19	29	20	**4M14G87MLOS**	**4M14G87MLOSS**	630	630
8, 10	3/8	M 14×1.5	11/16-18	19	19	30	44	**6M14G87MLOS**	**6M14G87MLOSS**	630	630
12	1/2	M 14×1.5	13/16-16	19	22	32	66	**8M14G87MLOS**	**8M14G87MLOSS**	630	630
14, 15, 16	5/8	M 14×1.5	1-14	19	27	35	82	**10M14G87MLOS**	**10M14G87MLOSS**	420	420
18, 20	3/4	M 14×1.5	1 3/16-12	19	32	36	104	**12M14G87MLOS**	**12M14G87MLOSS**	420	420

Product delivered with NBR TRAP seal. Replacement of TRAP seal is with a standard NBR O-ring – see page J73-J74.
Part numbers shown are part of our current manufacturing programme.

Imperial and metric parts may vary in hexagon dimensions.

$\frac{\text{PN (bar)}}{10}$ = PN (MPa)

Do not create drawings from these dimensions, they are subject to change and ISO manufacturing allowances.

Kovaz

G4MLOSMO Pressure gauge connector

O-Lok® ORFS tube end / Female BSPP gauge thread (ISO 1179-1)

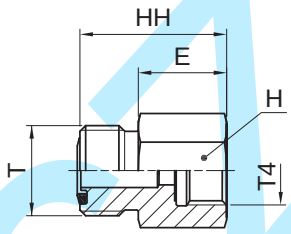

Tube O.D. mm	Tube O.D. in.	Thread BSPP T4	Thread UN/UNF-2A T	E mm	H mm	HH mm	Weight (steel) g/1 piece	O-Lok® Steel	O-Lok® Stainless Steel	PN (bar) S	PN (bar) SS
6	1/4	1/4-19	9/16-18	18	17	27	32	**4-4G4MLOSMO**	**4-4G4MLOSSMO**	400	400
6	1/4	1/2-14	9/16-18	27	30	37	80	**4-8G4MLOSMO**	**4-8G4MLOSSMO**	400	400
8, 10	3/8	1/4-19	11/16-16	17	19	28	49	**6G4MLOSMO**	**6G4MLOSSMO**	400	400
8, 10	3/8	1/2-14	11/16-16	27	30	38	107	**6-8G4MLOSMO**	**6-8G4MLOSSMO**	400	400
12	1/2	1/4-19	13/16-16	17	22	30	60	**8-4G4MLOSMO**	**8-4G4MLOSSMO**	280	280
12	1/2	1/2-14	13/16-16	27	30	40	80	**8-8G4MLOSMO**	**8-8G4MLOSSMO**	280	280

Product delivered with NBR TRAP seal. Replacement of TRAP seal is with a standard NBR O-ring – see page J73-J74.

Part numbers shown are part of our current manufacturing programme.

Imperial and metric parts may vary in hexagon dimensions.

$\frac{\text{PN (bar)}}{10} = \text{PN (MPa)}$

Do not create drawings from these dimensions, they are subject to change and ISO manufacturing allowances.

kovaz.cz

TT4ML Test point connector

O-Lok® ORFS swivel female end / Female BSPP thread (ISO 1179-1)
for EMA3 test point

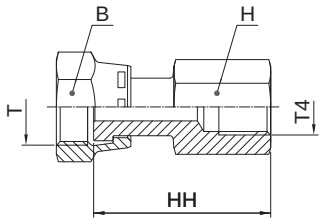

Form A

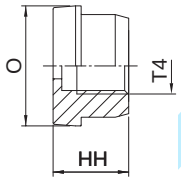

Form B

Form B has to be assembled with a nut BMLS/BLS.

Thread UN/UNF-2B T	Thread BSPP T4	O mm	B mm	H mm	HH mm	Weight (steel) g/1 piece	Form	O-Lok® Steel	O-Lok® Stainless Steel	PN (bar) S	PN (bar) SS
9/16-18	1/4-19	—	17	19	38	60	A	**4TT4MLS**	**4TT4MLSS**	420	420
11/16-16	1/4-19	—	22	19	41	74	A	**6TT4MLS**	**6TT4MLSS**	420	420
13/16-16	1/4-19	—	24	19	43	91	A	**8TT4MLS**	**8TT4MLSS**	420	420
—	1/4-19	23	—	—	18	30	B	**10TT4LS**	**10TT4MLSS**	420	420
—	1/4-19	28	—	—	18	48	B	**12TT4LS**	**12TT4MLSS**	420	420
—	1/4-19	34	—	—	18	95	B	**16TT4LS**	**16TT4MLSS**	420	420
—	1/4-19	41	—	—	18	130	B	**20TT4LS**	**20TT4MLSS**	280	280
—	1/4-19	48	—	—	18	189	B	**24TT4LS**	**24TT4MLSS**	280	280

Part numbers shown are part of our current manufacturing programme.

Imperial and metric parts may vary in hexagon dimensions.

$\frac{\text{PN (bar)}}{10}$ = PN (MPa)

Do not create drawings from these dimensions, they are subject to change and ISO manufacturing allowances.

Kovaz

TT8ML Test point connector

O-Lok® ORFS female swivel end / Metric female thread
(Metric female thread designed for use with EMA3 connections only)

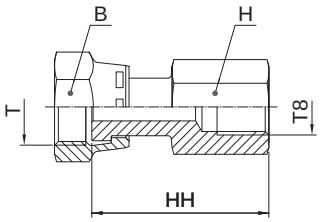

Form A

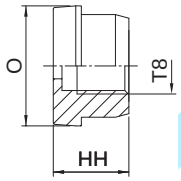

Form B

Form B has to be assembled with a nut BMLS/BLS.

Thread UN/UNF-2B T	Thread metric T8	O mm	B mm	H mm	HH mm	Weight (steel) g/1 piece	Form	O-Lok® Steel	O-Lok® Stainless Steel	PN (bar) S	PN (bar) SS
9/16-18	M 10×1.0	—	17	19	38	86	A	**4TT8MLS**	**4TT8MLSS**	420	420
11/16-16	M 10×1.0	—	22	19	39	86	A	**6TT8MLS**	**6TT8MLSS**	420	420
13/16-16	M 10×1.0	—	24	19	43	123	A	**8TT8MLS**	**8TT8MLSS**	420	420
—	M 10×1.0	23	—	—	16	40	B	**10TT8LS**	**10TT8LSS**	420	420
—	M 10×1.0	28	—	—	16	60	B	**12TT8LS**	**12TT8LSS**	420	420
—	M 10×1.0	34	—	—	16	85	B	**16TT8LS**	**16TT8LSS**	420	420
—	M 10×1.0	41	—	—	16	133	B	**20TT8LS**	**20TT8LSS**	280	280
—	M 10×1.0	48	—	—	16	193	B	**24TT8LS**	**24TT8LSS**	280	280

Part numbers shown are part of our current manufacturing programme.

Imperial and metric parts may vary in hexagon dimensions.

$\frac{\text{PN (bar)}}{10}$ = PN (MPa)

Do not create drawings from these dimensions, they are subject to change and ISO manufacturing allowances.

Kovaz

TTP4ML Test point connector

O-Lok® ORFS female swivel end / EMA3 test point

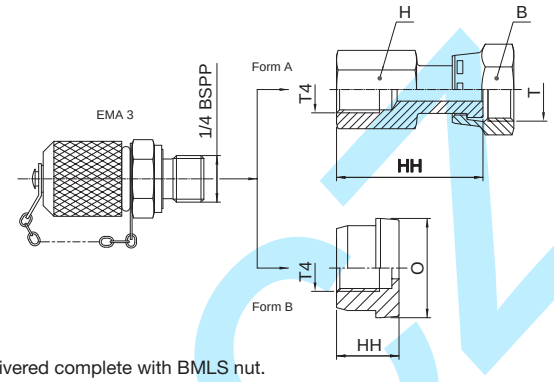

Form B versions delivered complete with BMLS nut.

Thread UN/UNF-2B T	Thread BSPP T4	O mm	B mm	H mm	HH mm	Weight (steel) g/1 piece	Form	O-Lok® Steel	PN (bar)
9/16-18	1/4-19	—	17	19	38	150	A	**4TTP4MLS**	420
11/16-16	1/4-19	—	22	19	41	164	A	**6TTP4MLS**	420
13/16-16	1/4-19	—	24	19	43	181	A	**8TTP4MLS**	420
—	1/4-19	23	30	—	18	120	B	**10TTP4LS**	420
—	1/4-19	28	36	—	18	138	B	**12TTP4LS**	420
—	1/4-19	34	41	—	18	185	B	**16TTP4LS**	420
—	1/4-19	41	50	—	18	200	B	**20TTP4LS**	280
—	1/4-19	49	60	—	18	279	B	**24TTP4LS**	280

O-Lok® is delivered with NBR elastomeric seals as standard. For more details on other seal materials see page J73-J74.

Part numbers shown are part of our current manufacturing programme.

Imperial and metric parts may vary in hexagon dimensions.

$\frac{\text{PN (bar)}}{10}$ = PN (MPa)

Do not create drawings from these dimensions, they are subject to change and ISO manufacturing allowances.

kovaz.cz

R6P4MLO Test point connector

O-Lok® ORFS end / O-Lok® ORFS female swivel end / EMA3 test point

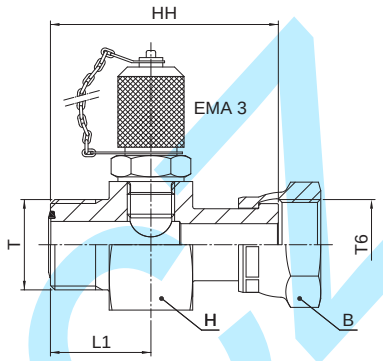

Tube O.D. mm	Tube O.D. in.	Thread UN/UNF-2A T	Thread UN/UNF-2B T6	HH mm	L1 mm	H mm	B mm	Weight (steel) g/1 piece	O-Lok® Steel	PN (bar)
6	1/4	9/16-18	9/16-18	50	22	36	17	270	**4-4R6P4MLOS**	420
8, 10	3/8	11/16-16	11/16-16	53	23	36	22	300	**6-4R6P4MLOS**	420
12	1/2	13/16-16	13/16-16	58	25	36	24	308	**8-4R6P4MLOS**	420
14, 15,16	5/8	1-14	1-14	64	27	36	30	337	**10-4R6P4MLOS**	420
18, 20	3/4	1 3/16-12	1 3/16-12	68	29	41	36	416	**12-4R6P4MLOS**	420
22, 25	1	1 7/16-12	1 7/16-12	71	29	46	41	506	**16-4R6P4MLOS**	420
28, 30, 32	1 1/4	1 11/16-12	1 11/16-12	73	29	50	50	691	**20-4R6P4MLOS**	280
35, 38	1 1/2	2-12	2-12	74	29	60	60	995	**24-4R6P4MLOS**	280

Product delivered with NBR TRAP seal. Replacement of TRAP seal is with a standard NBR O-ring – see page J73-J74.

Part numbers shown are part of our current manufacturing programme.

Imperial and metric parts may vary in hexagon dimensions.

$\frac{\text{PN (bar)}}{10}$ = PN (MPa)

Do not create drawings from these dimensions, they are subject to change and ISO manufacturing allowances.

kovaz.cz

LOHB3* Braze connector

O-Lok® ORFS tube end / Braze socket
SAE 520104 / SAE 52M0104 ISO 8434-3 BRS
(*Parts delivered oil dipped finish only – steel)

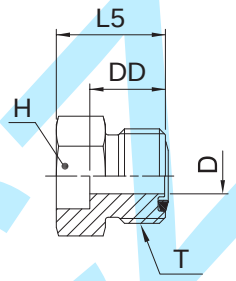

Tube O.D. mm	Tube O.D. in.	Thread UN/UNF-2A T	D mm	DD mm	H in.	H mm	L5 mm	Weight (steel) g/1 piece	O-Lok® Steel	O-Lok® Stainless Steel	PN (bar) S	PN (bar) SS
6		9/16-18	4.5	14	—	17	22	23	**4-6MMLOHB3S**		420	—
	1/4	9/16-18	4.5	13	5/8	—	22	24	**4 LOHB3-S**	**4 LOHB3-SS**	420	420
	3/8	9/16-18	4.5	13	5/8	—	22	23	**4-6 LOHB3-S**	**4-6 LOHB3-SS**	420	420
	3/8	11/16-16	6.5	14	3/4	—	23	36	**6 LOHB3-S**	**6 LOHB3-SS**	420	420
	1/4	11/16-16	6.5	14	3/4	—	23	42	**6-4 LOHB3-S**	**6-4 LOHB3-SS**	420	420
	1/2	11/16-16	6.5	14	3/4	—	23	36	**6-8 LOHB3-S**	**6-8 LOHB3-SS**	420	420
	5/8	11/16-16	6.5	15	3/4	—	23	30	**6-10 LOHB3-S**	**6-10 LOHB3-SS**	420	420
		11/16-16	6.5	15	—	19	23	30	**6-10MMLOHB3S**		420	—
12		13/16-16	9.5	16	—	22	25	42	**8-12MMLOHB3S**		420	—
	1/2	13/16-16	9.5	16	7/8	—	25	44	**8 LOHB3-S**	**8 LOHB3-SS**	420	420
	1/4	13/16-16	9.5	16	7/8	—	25	58	**8-4 LOHB3-S**	**8-4 LOHB3-SS**	420	420
	3/8	13/16-16	9.5	16	7/8	—	25	43	**8-6 LOHB3-S**	**8-6 LOHB3-SS**	420	420
	5/8	13/16-16	9.5	16	7/8	—	25	42	**8-10 LOHB3-S**	**8-10 LOHB3-SS**	420	420
	3/4	13/16-16	9.5	17	1 1/16	—	30	74	**8-12 LOHB3-S**	**8-12 LOHB3-SS**	420	420
16		1-14	12.5	19	—	—	28	101	**10-16MMLOHB3S**		420	—
	5/8	1-14	12.5	19	1 1/16	—	27	104	**10 LOHB3-S**	**10 LOHB3-SS**	420	420
	3/8	1-14	12.5	19	1 1/16	—	27	99	**10-6 LOHB3-S**	**10-6 LOHB3-SS**	420	420
	1/2	1-14	12.5	19	1 1/16	—	27	96	**10-8 LOHB3-S**	**10-8 LOHB3-SS**	420	420
	3/4	1-14	12.5	19	1 1/16	—	31	97	**10-12 LOHB3-S**	**10-12 LOHB3-SS**	420	420
20		1 3/16-12	15.5	21	—	32	34	144	**12-20MMLOHB3S**		420	—
	3/4	1 3/16-12	15.5	21	1 1/4	—	34	149	**12 LOHB3-S**	**12 LOHB3-SS**	420	420
	1/2	1 3/16-12	15.5	21	1 1/4	—	30	174	**12-8 LOHB3-S**	**12-8 LOHB3-SS**	420	420
	5/8	1 3/16-12	15.5	21	1 1/4	—	30	171	**12-10 LOHB3-S**	**12-10 LOHB3-SS**	420	420
	1	1 3/16-12	15.5	21	1 1/2	—	35	220	**12-16 LOHB3-S**	**12-16 LOHB3-SS**	420	420
25		1 7/16-12	20.5	25	—	41	39	218	**16-25MMLOHB3S**		420	—
	1	1 7/16-12	20.5	25	1 1/2	—	39	225	**16 LOHB3-S**	**16 LOHB3-SS**	420	420
	1/2	1 7/16-12	20.5	25	1 1/2	—	33	237	**16-8 LOHB3-S**	**16-8 LOHB3-SS**	420	420
	3/4	1 7/16-12	20.5	25	1 1/2	—	37	228	**16-12 LOHB3-S**	**16-12 LOHB3-SS**	420	420
	1 1/4	1 7/16-12	20.5	25	1 3/4	—	39	276	**16-20 LOHB3-S**	**16-20 LOHB3-SS**	420	420
30		1 11/16-12	26.0	25	—	46	39	269	**20-30MMLOHB3S**		280	—
	1 1/4	1 11/16-12	26.0	25	1 3/4	—	39	278	**20 LOHB3-S**	**20 LOHB3-SS**	280	280
	1	1 11/16-12	26.0	25	1 3/4	—	39	278	**20-16 LOHB3-S**	**20-16 LOHB3-SS**	280	280
	1 1/2	1 11/16-12	26.0	25	2 1/8	—	39	371	**20-24 LOHB3-S**	**20-24 LOHB3-SS**	280	280
38		2-12	32.0	25	—	55	39	374	**24-38MMLOHB3S**		280	—
	1 1/2	2-12	32.0	25	2 1/8	—	39	384	**24 LOHB3-S**	**24 LOHB3-SS**	280	280
	1 1/4	2-12	32.0	25	2 1/8	—	39	442	**24-20 LOHB3-S**	**24-20 LOHB3-SS**	280	280

Product delivered with NBR TRAP seal. Replacement of TRAP seal is with a standard NBR O-ring – see page J73-J74.

Part numbers shown are part of our current manufacturing programme.

Imperial and metric parts may vary in hexagon dimensions.

$\frac{\text{PN (bar)}}{10} = \text{PN (MPa)}$

Do not create drawings from these dimensions, they are subject to change and ISO manufacturing allowances.

FNML Cap

O-Lok® ORFS Female swivel cap end
SAE 520112

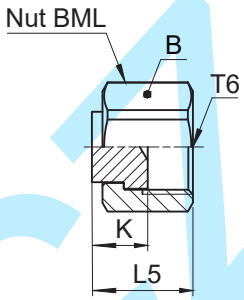

Thread UN/UNF-2B T6	B mm	K mm	L5 mm	Weight (steel) g/1 piece	O-Lok® Steel	O-Lok® Stainless Steel	PN (bar) S	PN (bar) SS
9/16-18	17	9	16	6	**4FNMLS**	**4FNMLSS**	630	630
11/16-16	22	11	20	10	**6FNMLS**	**6FNMLSS**	630	630
13/16-16	24	12	22	11	**8FNMLS**	**8FNMLSS**	630	630
1-14	30	14	26	31	**10FNMLS**	**10FNMLSS**	420	420
1 3/16-12	36	15	29	52	**12FNMLS**	**12FNMLSS**	420	420
1 7/16-12	41	16	30	81	**16FNMLS**	**16FNMLSS**	420	420
1 11/16-12	48	16	30	129	**20 FNL-S**	**20FNMLSS**	280	280
2-12	57	16	30	189	**24 FNL-S**	**24FNMLSS**	280	280
2 1/2-12	73	20	37	390	**32 FNL-S**		200	—

Part numbers shown are part of our current manufacturing programme.

Imperial and metric parts may vary in hexagon dimensions.

$\frac{\text{PN (bar)}}{10}$ = PN (MPa)

Do not create drawings from these dimensions, they are subject to change and ISO manufacturing allowances.

J

kovaz.cz

PNMLO Plug

O-Lok® ORFS tube end plug
SAE 520109

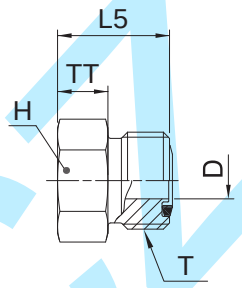

Tube O.D. mm	Tube O.D. in.	Thread UN/UNF-2A T	D mm	H mm	L5 mm	TT mm	Weight (steel) g/1 piece	O-Lok® Steel	O-Lok® Stainless Steel	PN (bar) S	PN (bar) SS
6	1/4	9/16-18	4.5	16	17	7	18	**4 PNLO-S**	**4PNMLOSS**	630	630
8, 10	3/8	11/16-16	6.5	19	19	8	34	**6PNMLOS**	**6PNMLOSS**	630	630
12	1/2	13/16-16	9.5	22	22	9	45	**8PNMLOS**	**8PNMLOSS**	630	630
14, 15, 16	5/8	1-14	12.5	27	26	10	91	**10 PNLO-S**	**10PNMLOSS**	420	420
18, 20	3/4	1 3/16-12	15.5	32	27	10	138	**12 PNLO-S**	**12PNMLOSS**	420	420
22, 25	1	1 7/16-12	20.5	38	28	10	203	**16 PNLO-S**	**16PNMLOSS**	420	420
28, 30, 32	1 1/4	1 11/16-12	26.0	45	28	10	266	**20 PNLO-S**	**20PNMLOSS**	420	280
35, 38	1 1/2	2-12	32.0	54	28	10	369	**24 PNLO-S**	**24PNMLOSS**	350	280
50	2	2 1/2-12	45.0	70	36	13	580	**32 PNLO-S**	**32PNMLOSS**	200	200

Product delivered with NBR TRAP seal. Replacement of TRAP seal is with a standard NBR O-ring – see page J73-J74.

Part numbers shown are part of our current manufacturing programme.

Imperial and metric parts may vary in hexagon dimensions.

$\frac{\text{PN (bar)}}{10}$ = PN (MPa)

Do not create drawings from these dimensions, they are subject to change and ISO manufacturing allowances.

Kovaci

XHMLO Conversion union

Triple-Lok® 37° flare tube end / O-Lok® ORFS tube end

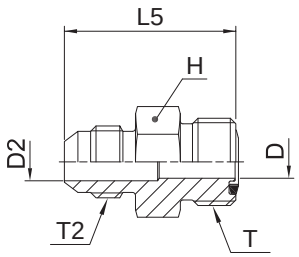

Tube O.D. mm	Tube O.D. in.	Thread UN/UNF-2A T	Thread UN/UNF-2A T2	D mm	D2 mm	L5 mm	H mm	Weight (steel) g/1 piece	O-Lok® Steel	O-Lok® Stainless Steel	PN (bar) S	PN (bar) SS
6	1/4	9/16-18	7/16-20	4.5	4.5	32	16	29	**4 XHLO-S**	**4XHMLOSS**	500	350
8, 10	3/8	11/16-16	9/16-18	6.5	7.5	34	19	45	**6 XHLO-S**	**6XHMLOSS**	420	350
12	1/2	13/16-16	3/4-16	9.5	9.9	39	22	70	**8 XHLO-S**	**8XHMLOSS**	420	350
14, 15, 16	5/8	1-14	7/8-14	12.5	12.5	47	27	119	**10 XHLO-S**	**10XHMLOSS**	350	350
18, 20	3/4	1 3/16-12	1 1/16-12	15.5	15.5	52	32	181	**12 XHLO-S**	**12XHMLOSS**	350	350
22, 25	1	1 7/16-12	1 5/16-12	20.5	20.5	55	38	265	**16 XHLO-S**	**16XHMLOSS**	280	280
28, 30, 32	1 1/4	1 11/16-12	1 5/8-12	26.0	26.0	58	45	383	**20 XHLO-S**	**20XHMLOSS**	280	210
35, 38	1 1/2	2-12	1 7/8-12	32.0	32.0	63	54	562	**24 XHLO-S**	**24XHMLOSS**	210	140

Product delivered with NBR TRAP seal. Replacement of TRAP seal is with a standard NBR O-ring – see page J73-J74.

Part numbers shown are part of our current manufacturing programme.

Imperial and metric parts may vary in hexagon dimensions.

$\frac{\text{PN (bar)}}{10}$ = PN (MPa)

Do not create drawings from these dimensions, they are subject to change and ISO manufacturing allowances.

Kovaz

XHML6 Conversion swivel nut connector

Triple-Lok® 37° flare tube end / O-Lok® ORFS female swivel end

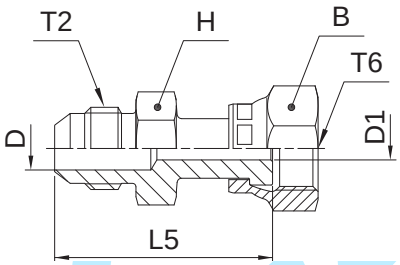

Tube O.D. mm	Tube O.D. in.	Thread UN/UNF-2A T2	Thread UN/UNF-2B T6	B mm	D1 mm	D mm	L5 mm	H mm	Weight (steel) g/1 piece	O-Lok® Steel	O-Lok® Stainless Steel	PN (bar) S	PN (bar) SS
6	1/4	7/16-20	9/16-18	18	4.2	4.2	38	16	29	**4 XHL6-S**	**4XHML6SS**	500	350
8, 10	3/8	9/16-18	11/16-16	21	6.7	6.7	41	19	46	**6 XHL6-S**	**6XHML6SS**	420	350
12	1/2	3/4-16	13/16-16	24	9.1	9.1	48	22	73	**8 XHL6-S**	**8XHML6SS**	420	350
14, 15, 16	5/8	7/8-14	1-14	29	11.5	11.5	56	27	126	**10 XHL6-S**	**10XHML6SS**	350	350
18, 20	3/4	1 1/16-12	1 3/16-12	35	14.0	14.0	64	32	205	**12 XHL6-S**	**12XHML6SS**	350	350
22, 25	1	1 5/16-12	1 7/16-12	41	19.9	19.9	68	38	285	**16 XHL6-S**	**16XHML6SS**	280	280
28, 30, 32	1 1/4	1 5/8-12	1 11/16-12	48	26.0	26.0	71	43	623	**20 XHL6-S**	**20XHML6SS**	280	210

Part numbers shown are part of our current manufacturing programme.

Imperial and metric parts may vary in hexagon dimensions.

$\frac{\text{PN (bar)}}{10}$ = PN (MPa)

Do not create drawings from these dimensions, they are subject to change and ISO manufacturing allowances.

Kovaz

LOHMX6 Conversion swivel nut connector

Triple-Lok® 37 flare female swivel end / O-Lok® ORFS male end

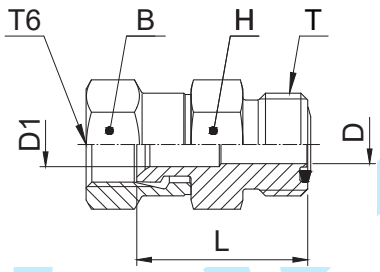

Tube O.D. mm	Tube O.D. in.	Thread UN/UNF-2A T	Thread UN/UNF-2B T6	B mm	D mm	D1 mm	H mm	L mm	Weight (steel) g/1 piece	O-Lok® Steel	O-Lok® Stainless Steel	PN (bar) S	PN (bar) SS
6	1/4	9/16-18	7/16-20	14	4.5	4.5	16	24	26	**4 LOHX6-S**	**4LOHMX6SS**	500	350
8, 10	3/8	11/16-16	9/16-18	18	6.5	6.5	19	29	40	**6 LOHX6-S**	**6LOHMX6SS**	350	350
12	1/2	13/16-16	3/4-16	22	9.5	9.5	22	34	63	**8 LOHX6-S**	**8LOHMX6SS**	350	350
14, 15, 16	5/8	1-14	7/8-14	25	12.5	12.5	27	39	103	**10 LOHX6-S**	**10LOHMX6SS**	350	350
18, 20	3/4	1 3/16-12	1 1/16-12	32	15.5	15.5	32	41	162	**12 LOHX6-S**	**12LOHMX6SS**	350	350
22, 25	1	1 7/16-12	1 5/16-12	38	20.5	20.5	38	46	229	**16 LOHX6-S**	**16LOHMX6SS**	250	250

Product delivered with NBR TRAP seal. Replacement of TRAP seal is with a standard NBR O-ring – see page J73-J74.

Part numbers shown are part of our current manufacturing programme.

Imperial and metric parts may vary in hexagon dimensions.

$\frac{\text{PN (bar)}}{10} = \text{PN (MPa)}$

Do not create drawings from these dimensions, they are subject to change and ISO manufacturing allowances.

kovaz

LOHU86 EO swivel adapter

O-Lok® ORFS tube end / EO 24° DKO swivel

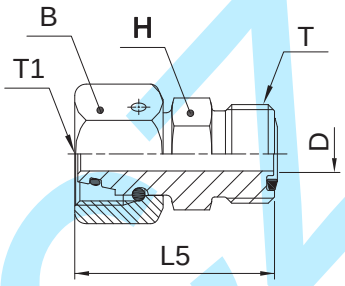

Tube O.D. mm	Tube O.D. in.	EO Swivel Size	Thread UN/UNF-2A T	Thread metric T1	H mm	D mm	L5 mm	B mm	Weight (steel) g/1 piece	O-Lok® Steel	PN (bar)
6	1/4	6L	9/16-18	M 12×1.5	17	2.6	34	14	30	**4-6L LOHU86-S**	500
6	1/4	8L	9/16-18	M 14×1.5	17	4.1	34	17	50	**4-8L LOHU86-S**	500
8, 10	3/8	10L	11/16-16	M 16×1.5	19	6.1	37	19	75	**6-10L LOHU86-S**	500
12	1/2	12L	13/16-16	M 18×1.5	22	8.2	39	22	145	**8-12L LOHU86-S**	400
14, 15 16	5/8	15L	1-14	M 22×1.5	27	10.2	46	27	180	**10-15L LOHU86-S**	400
18, 20	3/4	18L	1 3/16-12	M 26×1.5	32	13.2	48	32	250	**12-18L LOHU86-S**	400
22, 25	1	22L	1 7/16-12	M 30×2.0	41	17.2	53	36	305	**16-22L LOHU86-S**	250
6	1/4	6S	9/16-18	M 14×1.5	17	2.6	34	17	30	**4-6S LOHU86-S**	630
6	1/4	8S	9/16-18	M 16×1.5	17	4.1	34	19	50	**4-8S LOHU86-S**	630
8, 10	3/8	10S	11/16-16	M 18×1.5	19	6.0	37	22	75	**6-10S LOHU86-S**	630
12	1/2	12S	13/16-16	M 20×1.5	22	8.0	40	24	145	**8-12S LOHU86-S**	630
14, 15, 16	5/8	14S	1-14	M 22×1.5	27	9.2	47	27	180	**10-14S LOHU86-S**	420
14, 15, 16	5/8	16S	1-14	M 24×1.5	27	11.2	47	30	185	**10-16S LOHU86-S**	420
18, 20	3/4	20S	1 3/16-12	M 30×2.0	32	14.1	52	36	260	**12-20S LOHU86-S**	420
22, 25	1	25S	1 7/16-12	M 36×2.0	41	18.2	55	46	308	**16-25S LOHU86-S**	420

Product delivered with NBR TRAP seal. Replacement of TRAP seal is with a standard NBR O-ring – see page J73-J74.

Part numbers shown are part of our current manufacturing programme.

Imperial and metric parts may vary in hexagon dimensions.

$$\frac{\text{PN (bar)}}{10} = \text{PN (MPa)}$$

Do not create drawings from these dimensions, they are subject to change and ISO manufacturing allowances.

Kovo.cz

FNLBA Bleed adaptor

O-Lok® ORFS female end

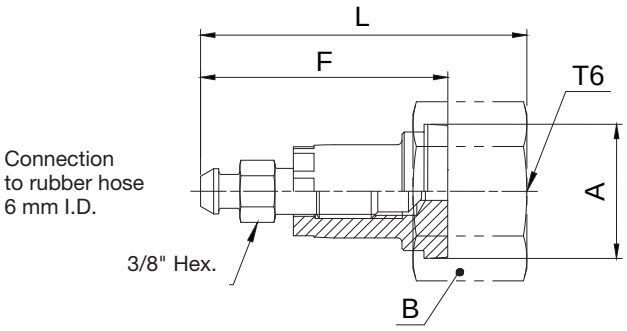

Thread UN/UNF-2B T6	A mm	F mm	B mm	L mm	Weight (steel) g/1 piece	O-Lok® Steel	O-Lok® Stainless Steel	PN (bar) S	PN (bar) SS
13/16-16	19	41	24	53	49	**8 FNLBA-S**	**8 FNLBA-SS**	630	630
1-14	23	41	29	55	77	**10 FNLBA-S**	**10 FNLBA-SS**	420	420
1 3/16-12	28	41	35	56	111	**12 FNLBA-S**	**12 FNLBA-SS**	420	420
1 7/16-12	34	41	41	56	113	**16 FNLBA-S**	**16 FNLBA-SS**	420	420
1 11/16-12	41	41	48	56	151	**20 FNLBA-S**	**20 FNLBA-SS**	420	420
2-12	49	41	57	56	161	**24 FNLBA-S**	**24 FNLBA-SS**	420	350

Part numbers shown are part of our current manufacturing programme.

Imperial and metric parts may vary in hexagon dimensions.

$\frac{\text{PN (bar)}}{10}$ = PN (MPa)

Do not create drawings from these dimensions, they are subject to change and ISO manufacturing allowances.

kovaz.si

PNLOBA Bleed adaptor

O-Lok® ORFS female end

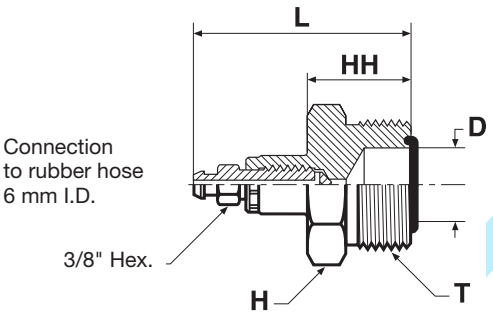

Tube O.D. mm	Tube O.D. in.	Thread UN/UNF-2A T	D mm	H mm	HH mm	L mm	Weight (steel) g/1 piece	O-Lok® Steel	PN (bar)
6	1/4	9/16-18	4.5	18	20	48	57	**4 PNLOBA-S**	630
8, 10	3/8	11/16-16	6.5	19	22	50	64	**6 PNLOBA-S**	630
12	1/2	13/16-16	9.5	22	23	53	93	**8 PNLOBA-S**	630
14, 15, 16	5/8	1-14	12.5	27	26	56	127	**10 PNLOBA-S**	420
18, 20	3/4	1 3/16-12	15.5	32	27	58	220	**12 PNLOBA-S**	420
22, 25	1	1 7/16-12	20.5	38	28	60	266	**16 PNLOBA-S**	420
28, 30, 32	1 1/4	1 11/16-12	26.0	45	28	61	304	**20 PNLOBA-S**	420
35, 38	1 1/2	2-12	32.0	54	28	63	422	**24 PNLOBA-S**	350

Product delivered with NBR TRAP seal. Replacement of TRAP seal is with a standard NBR O-ring – see page J73-J74.

Part numbers shown are part of our current manufacturing programme.

Imperial and metric parts may vary in hexagon dimensions.

$\frac{\text{PN (bar)}}{10}$ = PN (MPa)

Do not create drawings from these dimensions, they are subject to change and ISO manufacturing allowances.

Kovaz.si

HPBA Bleed adaptor

Bleed hose connection / Male NPTF thread (SAE J476)

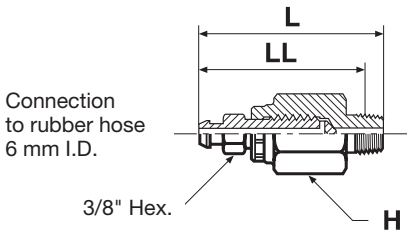

Thread NPTF	H mm	L mm	LL mm	O-Lok® Steel	PN (bar)
1/4-18	18	56	47	**1/4 HPBA-S**	420

Imperial and metric parts may vary in hexagon dimensions.

$\frac{\text{PN (bar)}}{10}$ = PN (MPa)

Do not create drawings from these dimensions, they are subject to change and ISO manufacturing allowances.

J

P5ONBA Bleed adaptor

Bleed hose connection/Male UN/UNF thread – O-ring (ISO 11926)

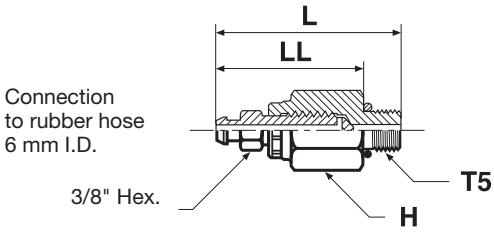

Thread UN/UNF-2A T5	H mm	L mm	LL mm	O-Lok® Steel	PN (bar)
7/16-20	18	52	41	**4 P5ONBA-S**	420

O-Lok® is delivered with NBR elastomeric seals as standard. For more details on other seal materials see page J73-J74.

Part numbers shown are part of our current manufacturing programme.

Imperial and metric parts may vary in hexagon dimensions.

$\frac{\text{PN (bar)}}{10}$ = PN (MPa)

Do not create drawings from these dimensions, they are subject to change and ISO manufacturing allowances.

TW3L Weld nipple

O-Lok® ORFS female end / Butt weld end

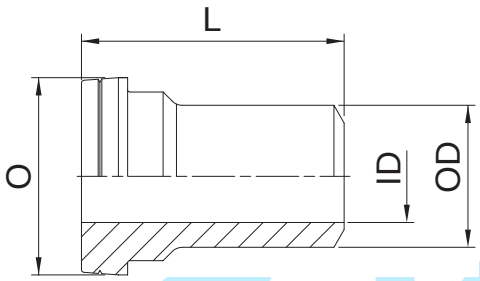

Tube O.D. mm	ID mm	OD mm	O mm	L mm	Weight (steel) g/1 piece	O-Lok® Steel	O-Lok® Stainless Steel
6	2	6	13	25	10	**TW3LS6**	**TW3LSS6**
8	3	8	13	25	12	**TW3LS8**	**TW3LSS8**
10	4	10	16	26	15	**TW3LS10**	**TW3LSS10**
12	5	12	19	26	18	**TW3LS12**	**TW3LSS12**
16	10	16	23	32	25	**TW3LS16**	**TW3LSS16**
20	13	20	28	37	30	**TW3LS20**	**TW3LSS20**
25	16	25	34	42	37	**TW3LS25**	**TW3LSS25**
30	22	30	41	44	43	**TW3LS30**	**TW3LSS30**
38	28	38	48	49	70	**TW3LS38**	**TW3LSS38**

Part numbers shown are part of our current manufacturing programme.

Do not create drawings from these dimensions, they are subject to change and ISO manufacturing allowances.

WLNML Bulkhead locknut

SAE 520118/SAE 52M0118 ISO 8434-3 BHLN

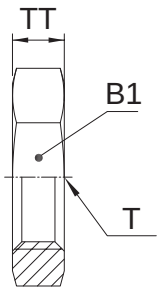

Thread UN/UNF-2B T	B1 mm	TT mm	Weight (steel) g/1 piece	O-Lok® Steel	O-Lok® Stainless Steel
9/16-18	22	7	11	**4WLNMLS**	**4WLNMLSS**
11/16-16	27	8	23	**6WLNMLS**	**6WLNMLSS**
13/16-16	30	9	26	**8WLNMLS**	**8WLNMLSS**
1-14	36	11	38	**10WLNMLS**	**10WLNMLSS**
1 3/16-12	41	11	44	**12WLNMLS**	**12WLNMLSS**
1 7/16-12	46	11	54	**16WLNMLS**	**16WLNMLSS**
1 11/16-12	51	10	73	**20 WLNL-S**	**20WLNMLSS**
2-12	60	10	102	**24 WLNL-S**	**24WLNMLSS**

Part numbers shown are part of our current manufacturing programme.

Imperial and metric parts may vary in hexagon dimensions.

Do not create drawings from these dimensions, they are subject to change and ISO manufacturing allowances.

Spare parts guide – O-Lok® retaining rings and seals

Face seal end O-rings SAE J1453/ISO 8434-3

Dash size	Thread UN/UNF	O-ring order code NBR	O-ring order code FKM	O-ring ID × section mm
4	9/16-18	**2-011-N552-9**	**2-011-V894-9**	7.65 × 1.78
6	11/16-16	**2-012-N552-9**	**2-012-V894-9**	9.25 × 1.78
8	13/16-16	**2-014-N552-9**	**2-014-V894-9**	12.42 × 1.78
10	1-14	**2-016-N552-9**	**2-016-V894-9**	15.60 × 1.78
12	1 3/16-12	**2-018-N552-9**	**2-018-V894-9**	18.77 × 1.78
16	1 7/16-12	**2-021-N552-9**	**2-021-V894-9**	23.52 × 1.78
20	1 11/16-12	**2-025-N552-9**	**2-025-V894-9**	29.87 × 1.78
24	2-12	**2-029-N552-9**	**2-029-V894-9**	37.82 × 1.78
32	2 1/2-12	**2-135-N552-9**	**2-135-V894-9**	48.90 × 2.62

BSPP male threads – ISO 1179

Thread BSPP	ED seal order code NBR	ED seal order code FKM	O-ring order code* NBR	O-ring order code* FKM	O-ring ID × section mm	Retainer ring Order code Steel	Retainer ring Order code Stainless Steel
1/8	**ED10X1X**	**ED10X1VITX**	**6-002-N552-9**	**6-002-V894-9**	8.00 × 2.00	**8207-1/8**	**8207SS1/8**
1/4	**ED14X1.5X**	**ED14X1.5VITX**	**2-111-N552-9**	**2-111-V894-9**	10.77 × 2.62	**8207-1/4**	**8207SS1/4A**
3/8	**ED3/8X**	**ED3/8VITX**	**2-113-N552-9**	**2-113-V894-9**	13.94 × 2.62	**8207-3/8**	**8207SS3/8A**
1/2	**ED1/2X**	**ED1/2VITX**	**5-256-N552-9**	**5-256-V894-9**	17.96 × 2.62	**8207-1/2**	**8207SS1/2**
3/4	**ED26X1.5X**	**ED26X1.5VITX**	**2-119-N552-9**	**2-119-V894-9**	23.47 × 2.62	**8207-3/4**	**8207SS3/4**
1	**ED33X2X**	**ED33X2VITX**	**2-217-N552-9**	**2-217-V894-9**	29.74 × 3.53	**8207-1**	**8207SS1A**
1 1/4	**ED42X2X**	**ED42X2VITX**	**2-222-N552-9**	**2-222-V894-9**	37.69 × 3.53	**8207-1-1/4**	**8207SS1 1/4**
1 1/2	**ED48X2X**	**ED48X2VITX**	**2-224-N552-9**	**2-224-V894-9**	44.04 × 3.53	**8207-1-1/2**	**8207SS1 1/2**

Typical fittings using these parts: F42EDMLO/C4OMLO/V4OMLO etc.

*Must be used with correct retainer ring.

Metric male threads – ISO 9974

Thread metric	ED seal order code NBR	ED seal order code FKM	O-ring order code* NBR	O-ring order code* FKM	O-ring ID × section mm	Retainer ring Order code Steel	Retainer ring Order code Stainless Steel
M 10×1.0	**ED10X1/R1/8X**	**ED10X1R1/8VITX**	**6-074-N552-9**	**6-074-V894-9**	8.00 × 1.50	**M10RR**	**RRM10X1SS**
M 12×1.5	**ED12X1.5X**	**ED14X1.5/VITX**	**2-012-N552-9**	**2-012-V894-9**	9.25 × 1.78	**M12RR**	**RRM12X1.5SS**
M 14×1.5	**ED14X1.5/R1/4X**	**ED14X1.5/R1/4VITX**	**2-013-N552-9**	**2-013-V894-9**	10.82 × 1.78	**M14RR**	**RRM14X1.5SS**
M 16×1.5	**ED16X1.5X**	**ED16X1.5/VITX**	**3-907-N552-9**	**3-907-V894-9**	13.46 × 2.08	**M16RR**	**RRM16X1.5SS**
M 18×1.5	**ED18X1.5X**	**ED18X1.5/VITX**	**2-114-N552-9**	**2-114-V894-9**	15.54 × 2.62	**M18RR**	**RRM18X1.5SS**
M 22×1.5	**ED22X1.5X**	**ED22X1.5VITX**	**2-018-N552-9**	**2-018-V894-9**	18.77 × 1.78	**M22RR**	**RRM22X1.5SS**
M 27×2.0	**ED26X1.5X****	**ED26X1.5VITX**	**2-119-N552-9**	**2-119-V894-9**	23.47 × 2.62	**M27RR**	**RRM27X2SS**
M 33×2.0	**ED33X2R1X**	**ED33X2/R1VITX**	**2-122-N552-9**	**2-122-V894-9**	28.24 × 2.62	**M33RR**	**RRM33X2SS**
M 42×2.0	**ED42X2/R1.1/4X**	**ED42X2R1.1/4VITX**	**2-128-N552-9**	**2-128-V894-9**	37.77 × 2.62	**M42RR**	**RRM42X2SS**
M 48×2.0	**ED48X2/R1.1/2X**	**ED48X2R1.1/2VITX**	**2-132-N552-9**	**2-132-V894-9**	44.12 × 2.62	**M48RR**	**RRM48X2SS**

Typical fittings using these parts: F82EDMLO/C8OMLO/V8OMLO etc.

*Must be used with correct retainer ring.

**Same seal used for M 26×1.5 and M 27×2.0

Spare parts guide – O-Lok® retaining rings and seals

UN / UNF male threads – ISO 11926

Dash size	Thread UN/UNF	O-ring order code NBR	O-ring order code FKM	O-ring ID × section mm
2	5/16-24	**3-902-N552-9**	**3-902-V894-9**	6.07 × 1.63
3	3/8-24	**3-903-N552-9**	**3-903-V894-9**	7.65 × 1.63
4	7/16-20	**3-904-N552-9**	**3-904-V894-9**	8.92 × 1.83
5	1/2-20	**3-905-N552-9**	**3-905-V894-9**	10.52 × 1.83
6	9/16-18	**3-906-N552-9**	**3-906-V894-9**	11.89 × 1.98
8	3/4-16	**3-908-N552-9**	**3-908-V894-9**	16.36 × 2.21
10	7/8-14	**3-910-N552-9**	**3-910-V894-9**	19.18 × 2.46
12	1 1/16-12	**3-912-N552-9**	**3-912-V894-9**	23.47 × 2.95
14	1 3/16-12	**3-914-N552-9**	**3-914-V894-9**	26.59 × 2.95
16	1 5/16-12	**3-916-N552-9**	**3-916-V894-9**	29.74 × 2.95
20	1 5/8-12	**3-920-N552-9**	**3-920-V894-9**	37.47 × 3.00
24	1 7/8-12	**3-924-N552-9**	**3-924-V894-9**	43.69 × 3.00
32	2 1/2-12	**3-932-N552-9**	**3-932-V894-9**	59.36 × 3.00

Typical fittings using these parts: F5OMLO/C5OMLO/R5OMLO etc.

Metric male threads – ISO 6149

Thread metric	O-ring order code NBR	O-ring order code FKM	O-ring ID × section mm
M 10×1.0	**6-345-N552-9**	**6-345-V894-9**	8.20 × 1.50
M 12×1.5	**6-346-N552-9**	**6-346-V894-9**	9.40 × 2.10
M 14×1.5	**6-347-N552-9**	**6-347-V894-9**	11.40 × 2.10
M 16×1.5	**6-348-N552-9**	**6-348-V894-9**	13.40 × 2.10
M 18×1.5	**6-349-N552-9**	**6-349-V894-9**	15.40 × 2.10
M 22×1.5	**6-350-N552-9**	**6-350-V894-9**	19.40 × 2.10
M 27×2.0	**6-351-N552-9**	**6-351-V894-9**	23.70 × 2.80
M 33×2.0	**6-352-N552-9**	**6-352-V894-9**	29.70 × 2.80
M 42×2.0	**6-353-N552-9**	**6-353-V894-9**	38.70 × 2.80
M 48×2.0	**6-354-N552-9**	**6-354-V894-9**	46.70 × 2.80

Typical fittings using these parts: F87OMLO/S87OMLO etc.

Other seal compounds a available on request for alternative applications.

Kovaz.cz

SBR Braze ring

For metric tubing

Tube O.D. mm	Order code
6	**SBR 6**
8	**SBR 8**
10	**SBR 10**
12	**SBR 12**
14	**SBR 14**
15	**SBR 15**
16	**SBR 16**
18	**SBR 18**
20	**SBR 20**
22	**SBR 22**
25	**SBR 25**
28	**SBR 28**
30	**SBR 30**
32	**SBR 32**
35	**SBR 35**
38	**SBR 38**
50	**SBR 50**

Part numbers shown are part of our current manufacturing programme.

For inch tubing

Tube O.D. in.	Order code
1/4	**4SBR**
3/8	**6SBR**
1/2	**8SBR**
5/8	**10SBR**
3/4	**12SBR**
1	**16SBR**
1 1/4	**20SBR**
1 1/2	**24SBR**
2	**32SBR**

kovaz.cz

For your notes

Parker Hannifin

Triple-Lok®

The universal
37° flared fitting

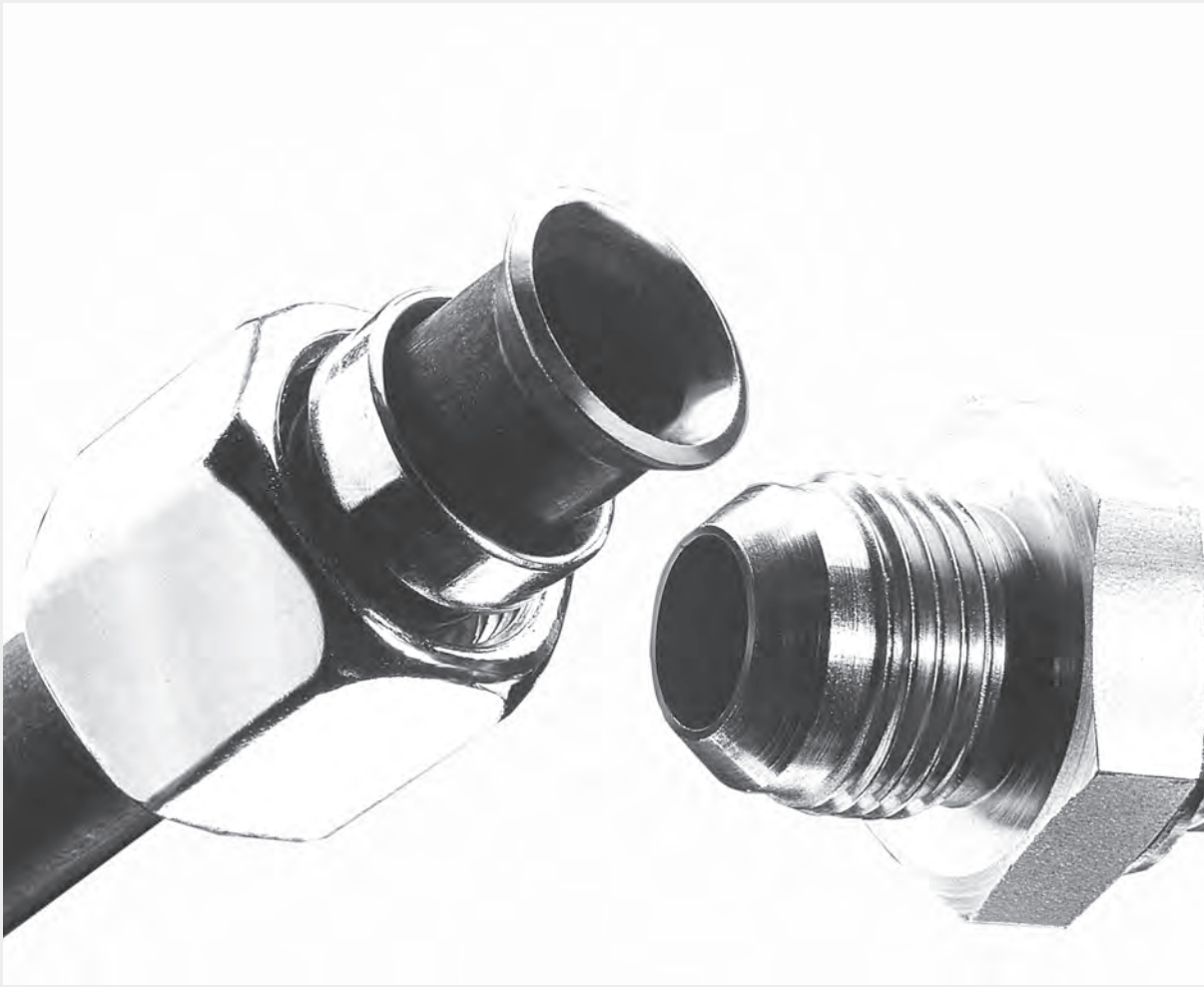

Visual index

Tube to tube	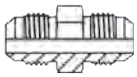 **HMTX** p. K9	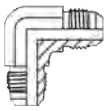 **EMTX** p. K10	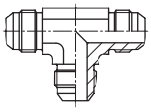 **JMTX** p. K11	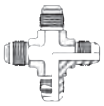 **KTX** p. K12			
Bulkhead union	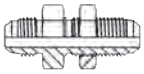 **WMTX** p. K13	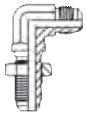 **WEMTX** p. K14	**WNTX** p. K15	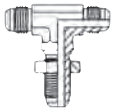 **WJTX** p. K16	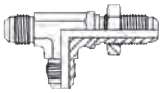 **WJJTX** p. K17	**WLNM** p. K91	
Tube to male NPTF	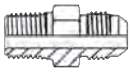 **FMTX** p. K35	**CMTX** p. K50	**CCTX** p. K51	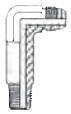 **CCCTX** p. K52	**VMTX** p. K58	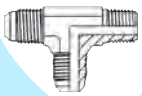 **RMTX** p. K70	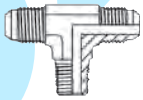 **SMTX** p. K64
Tube to male BSPT	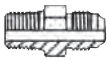 **F3MX** p. K36	**C3MX** p. K53	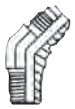 **V3MX** p. K59	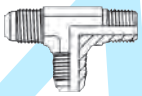 **R3MX** p. K71	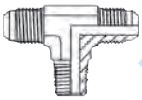 **S3MX** p. K65		
Tube to male BSPP	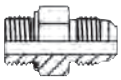 **F4OMX** p. K32	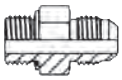 **F42EDMX** p. K30	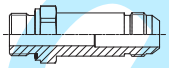 **FF42EDMX** p. K31	**C4OMX** p. K48	**V4OMX** p. K56	**R4OMX** p. K68	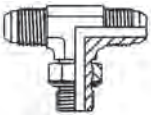 **S4OMX** p. K62
Tube to straight thread UNF	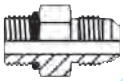 **F5OMX** p. K27	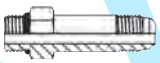 **FF5OMX** p. K29	**C5OMX** p. K46	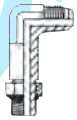 **CC5OX** p. K47	**V5OMX** p. K55	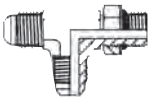 **R5OMX** p. K67	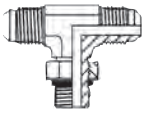 **S5OMX** p. K61
Tube to male metric ISO 6149-3	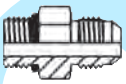 **F87OMX** p. K26	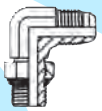 **C87OMX** p. K45	**V87OMX** p. K54	**R87OMX** p. K66	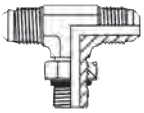 **S87OMX** p. K60		
Tube to male metric DIN 3852-1	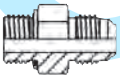 **F8OMX** p. K34	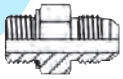 **F82EDMX** p. K33	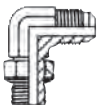 **C8OMX** p. K49	**V8OMX** p. K57	**R8OMX** p. K69	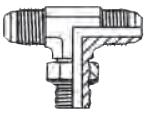 **S8OMX** p. K63	
Tube to female NPTF	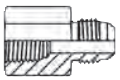 **GMTX** p. K73	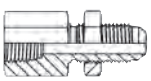 **WGMTX** p. K74	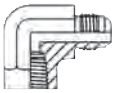 **DMTX** p. K75	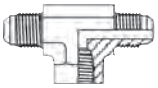 **OTX** p. K76	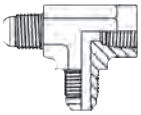 **MTX** p. K77	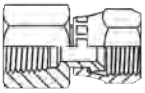 **G6X** p. K78	

Visual index

Pressure gauge connectors	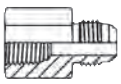 **G4MX** p. K72 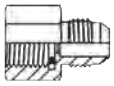 **G4MXMO** p. K79 **TT4MX** p. K80 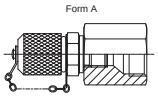 **TTP4MX** p. K81 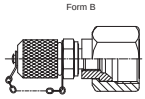 **TTP4MX** p. K81
	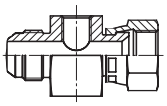 **R6O4MX** p. K82 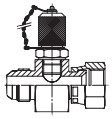 **R6P4MX** p. K83 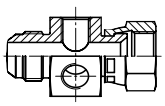 **K6OO4MX** p. K84 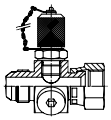 **K6PP4MX** p. K85
Triple-Lok® swivel nut male pipe	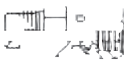 **F6MX** p. K41 **F63MX** p. K44
Triple-Lok® swivel nut straight thread	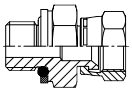 **F64OMX** p. K40 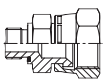 **F642EDMX** p. K39 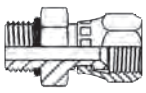 **F65OMX** p. K38 **F68OMX** p. K42 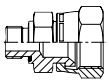 **F682EDMX** p. K41 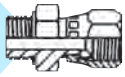 **F687OMX** p. K37
Tube to Triple-Lok® swivel nut	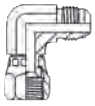 **C6MX** p. K18 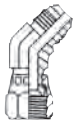 **V6MX** p. K19 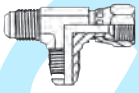 **R6MX** p. K21 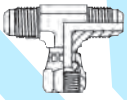 **S6MX** p. K20 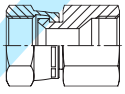 **BBMTX** p. K22 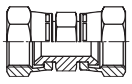 **HMX6** p. K24 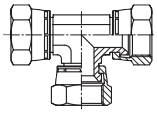 **JX6** p. K25
Nuts & Sleeves	**BMTX** p. K6 **BTX** p. K5 **TX** p. K7
Tube end reducers Plug Caps	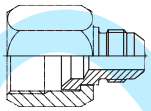 **TRMTX** p. K23 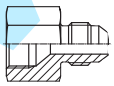 **FNMTX** p. K86 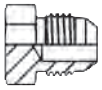 **PNMTX** p. K87
Conversion Adapters Triple-Lok®/ O-Lok®	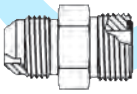 **XHMLO** p. K88 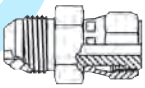 **XHML6** p. K89 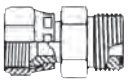 **LOHMX6** p. K90
Seals Retaining ring and Tooling	**Triple-Lok® Components** p. K92

kovaz.cz

How to order Triple-Lok® fittings

	1	2	3	4	5	6	7
Example Order code	**6-8**	**C**	**5**	**O**	**M**	**X**	**S**

1 Order codes for tube and port thread ends

Dash Size	Tube Size (Inch)	Tube Size (mm)	Port Thread Size (Inch) BSPP/BSPT/NPT	Port Thread Size UN / UNF
2	1/8		1/8	5/16-24
3	3/16			3/8-24
4	1/4	6	1/4	7/16-20
5				1/2-20
6	3/8	8,10	3/8	9/16-18
8	1/2	12	1/2	3/4-16
10	5/8	14,15,16	5/8	7/8-14
12	3/4	18,20	3/4	1 1/6-12
14				1 3/6-12
16	1	25	1	1 5/16-12
20	1 1/4	28,30,32	1 1/4	1 5/8-12
24	1 1/2	35,38	1 1/2	1 7/8-12
28		42		2 1/4-12
32	2	50	2	2 1/2-12

Metric port threads are shown as per example 4M12C87OMXS

2 Codes for fitting styles/shapes

Code	Description
AE6	Straight Thread Swivel
B	Nut
C	Male Stud elbow
CC	Long Male Stud elbow
CCC	Extra Long Male Stud elbow
C6	Swivel Nut Elbow
D	Female Elbow
E	Union elbow
F	Male Stud connector
FF	Long Male Stud connector
F6	Male Stud Swivel
FN	Cap
G	Female Connector
G-MO	Gauge Adapter Fitting
G6	Female Connector Swivel
H	Straight union
H6	Swivel/Swivel Adapter
J	Union Tee
J6	Swivel Tee
K	Union Cross
LOHX6	Triple-Lok® Swivel/O-Lok® Adapter
M	Female Run Tee
O	Female Branch Tee
PN	Plug
R	Male Stud Run Tee
R6	Swivel Run Tee
S	Male Stud Branch Tee
S6	Swivel Branch Tee
T	Sleeve
TR	Tube End Reducer
TT	Test Point Adapter
V	45° male stud elbow
V6	Swivel Nut 45° Elbow
W	Bulkhead Union
WE	Bulkhead Union Elbow
WG	Female Bulkhead connector
WJJ	Bulkhead Run Tee
WJT	Bulkhead Branch Tee
WLN	Bulkhead Locknut
WN	Bulkhead 45° union elbow
XHL	Triple Lok® / O-Lok® Adaptor
XHL6	Triple Lok® / O-Lok® Swivel Adaptor

3 Threads and sealing methods

Code	Description
None	NPT/NPTF Thread
3	BSPT Thread
4	BSPP Thread O-Ring & Retainer Ring
42	BSPP Thread EOLASTIC seal 'ED'
5	UN/UNF Thread (O-Ring Seal)
8	Metric Thread O-Ring & Retainer Ring
82	Metric Thread EOLASTIC seal 'ED'
87	Metric ISO 6149 Thread (O-Ring Seal)
63	Swivel Connector BSPT end
64	Swivel Connector BSPP end (O-Ring & Retainer Ring)
642	Swivel Connector BSPP end (EOLASTIC Seal 'ED')
65	Swivel Connector UN/UNF end (O-Ring seal)
68	Swivel Connector Metric end (O-Ring & Retainer Ring)
682	Swivel Connector Metric end (EOLASTIC Seal 'ED')
687	Swivel Connector Metric ISO 6149 end

4 Stud connector seal

Code	Description
O	O-Ring Seal (Assembled on fitting)
ED	Captive EOLASTIC Seal (Assembled on fitting)
No Code	No Seal (O-Ring not assembled on fitting)

5 Hexagon/ Across flats style

Code	Description
M	Metric Hexagon Dimension
No Code	Inch Hexagon Dimension

6 Fitting type

Code	Description
X	Parker Triple-Lok®

7 Fitting material

Code	Description
S	Steel
SS	Stainless Steel
B	Brass

Kovaz.cz

BTX Nut

Triple-Lok® 37° Flare end nut
SAE 070110 MS51531

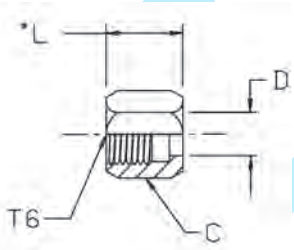

Tube O.D. mm	Tube O.D. in.	Thread UN/UNF-2B T6	C in.	D mm	L mm	Weight (steel) g/1 piece	Triple-Lok® Steel	Triple-Lok® Stainless Steel	Triple-Lok® Brass
	1/8	5/16-24	3/8	4.5	14.0	6	**2 BTX-S**	**2 BTX-SS**	**2 BTX-B**
	3/16	3/8-24	7/16	6.0	15.5	8	**3 BTX-S**	**3 BTX-SS**	**3 BTX-B**
6	1/4	7/16-20	9/16	8.0	16.0	11	**4 BTX-S**	**4 BTX-SS**	**4 BTX-B**
8	5/16	1/2-20	5/8	9.5	17.0	14	**5 BTX-S**	**5 BTX-SS**	**5 BTX-B**
10	3/8	9/16-18	11/16	11.0	18.5	18	**6 BTX-S**	**6 BTX-SS**	**6 BTX-B**
12	1/2	3/4-16	7/8	14.5	21.5	29	**8 BTX-S**	**8 BTX-SS**	**8 BTX-B**
14, 15, 16	5/8	7/8-14	1	18.0	25.0	54	**10 BTX-S**	**10 BTX-SS**	**10 BTX-B**
18	3/4	1 1/16-12	1 1/4	21.0	26.0	73	**12 BTX-S***	**12 BTX-SS***	**12 BTX-B***
22	7/8	1 3/16-12	1 3/8	24.0	27.5	100	**14 BTX-S**	**14 BTX-SS**	**14 BTX-B**
25	1	1 5/16-12	1 1/2	27.5	28.5	104	**16 BTX-S**	**16 BTX-SS**	**16 BTX-B**
28, 30, 32	1 1/4	1 5/8-12	2	34.0	31.0	240	**20 BTX-S**	**20 BTX-SS**	**20 BTX-B**
35, 38	1 1/2	1 7/8-12	2 1/4	41.0	36.0	325	**24 BTX-S**	**24 BTX-SS**	**24 BTX-B**
	2	2 1/2-12	2 7/8	55.0	44.5	549	**32 BTX-S**	**32 BTX-SS**	

Order codes shown are part of our current manufacturing programme.
Do not create drawings from these dimensions, they are subject to change and ISO manufacturing allowances.

***Size 12 BTX-S cannot be used with the metric tube sleeve TXS20 or 20 mm tubes.**
This applies to steel, stainless steel and brass.

Kovai

BMTX Nut

Triple-Lok® 37° Flare end nut
SAE 070110

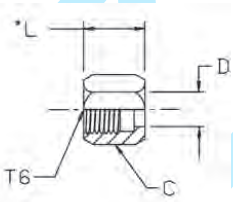

Tube O.D. mm	Tube O.D. in.	Thread UN/UNF-2B T6	C mm	D mm	L mm	Weight (steel) g/1 piece	Triple-Lok® Steel	Triple-Lok® Stainless Steel
6	1/4	7/16-20	14	8.0	15.5	11	**4BMTXS**	**4BMTXSS**
8	5/16	1/2-20	17	10.0	17.0	14	**5BMTXS**	**5BMTXSS**
10	3/8	9/16-18	19	11.0	18.0	18	**6BMTXS**	**6BMTXSS**
12	1/2	3/4-16	22	14.5	21.0	29	**8BMTXS**	**8BMTXSS**
14, 15, 16	5/8	7/8-14	27	18.0	24.5	42	**10BMTXS**	**10BMTXSS**
18, 20	3/4	1 1/16-12	32	22.0	26.0	73	**12BMTXS**	**12BMTXSS**
25	1	1 5/16-12	41	28.0	28.0	104	**16BMTXS**	**16BMTXSS**
28, 30, 32	1 1/4	1 5/8-12	50	34.0	33.0	240	**20BMTXS**	**20BMTXSS**
35, 38	1 1/2	1 7/8-12	60	41.0	38.0	325	**24BMTXS**	**24BMTXSS**
42		2 1/4-12	65	48.0	40.0	437	**28BMTXS**	**28BMTXSS**

Order codes shown are part of our current manufacturing programme.
Do not create drawings from these dimensions, they are subject to change and ISO manufacturing allowances.

Kovaci

TX Sleeve

Triple-Lok® 37° Flare tube end sleeve for metric tubes
SAE 070105

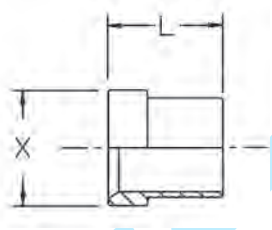

Tube O.D. mm	L mm	X mm	Weight (steel) g/1 piece	Triple-Lok® Steel	Triple-Lok® Stainless Steel	Triple-Lok® Brass
6	10.0	9.5	2	**TXS6**	**TXSS6**	**TXB6**
8	11.0	11.0	2	**TXS8**	**TXSS8**	**TXB8**
10	12.5	12.5	2	**TXS10**	**TXSS10**	**TXB10**
12	14.0	17.0	7	**TXS12**	**TXSS12**	**TXB12**
14	17.0	20.0	13	**TXS14**	**TXSS14**	**TXB14**
15	17.0	20.0	10	**TXS15**	**TXSS15**	**TXB15**
16	17.0	20.0	7	**TXS16**	**TXSS16**	**TXB16**
18	17.5	24.5	16	**TXS18**	**TXSS18**	**TXB18**
20	17.5	24.5	12	**TXS20**	**TXSS20**	**TXB20**
22	19.0	28.0	25	**TXS22**	**TXSS22**	**TXB22**
25	20.0	31.0	21	**TXS25**	**TXSS25**	**TXB25**
28	23.0	39.0	40	**TXS28**	**TXSS28**	**TXB28**
30	23.0	39.0	45	**TXS30**	**TXSS30**	**TXB30**
32	23.0	39.0	30	**TXS32**	**TXSS32**	**TXB32**
35	28.5	45.0	60	**TXS35**	**TXSS35**	**TXB35**
38	28.5	45.0	51	**TXS38**	**TXSS38**	**TXB38**
42	29.0	55.0	149	**TXS42**	**TXSS42**	**TXB42**

Order codes shown are part of our current manufacturing programme.
Do not create drawings from these dimensions, they are subject to change and ISO manufacturing allowances.

Kovalus

TX Sleeve

Triple-Lok® 37° Flare tube sleeve
SAE 070105 MS51533

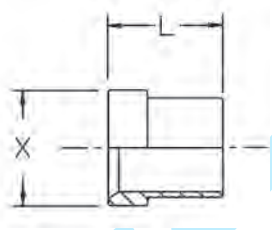

Tube O.D. in.	L mm	X mm	Weight (steel) g/1 piece	Triple-Lok® Steel	Triple-Lok® Stainless Steel	Triple-Lok® Brass
1/8	8.5	7.0	2	**2 TX-S**	**2 TX-SS**	**2 TX-B**
3/16	8.5	8.0	2	**3 TX-S**	**3 TX-SS**	**3 TX-B**
1/4	10.5	10.0	2	**4 TX-S**	**4 TX-SS**	**4 TX-B**
5/16	11.0	11.5	2	**5 TX-S**	**5 TX-SS**	**5 TX-B**
3/8	12.5	13.0	3	**6 TX-S**	**6 TX-SS**	**6 TX-B**
1/2	14.0	17.0	6	**8 TX-S**	**8 TX-SS**	**8 TX-B**
5/8	17.0	20.0	8	**10 TX-S**	**10 TX-SS**	**10 TX-B**
3/4	17.0	24.5	13	**12 TX-S**	**12 TX-SS**	**12 TX-B**
7/8	19.0	28.0	18	**14 TX-S**	**14 TX-SS**	**14 TX-B**
1	20.0	31.0	23	**16 TX-S**	**16 TX-SS**	**16 TX-B**
1 1/4	23.0	39.0	30	**20 TX-S**	**20 TX-SS**	**20 TX-B**
1 1/2	28.0	45.0	51	**24 TX-S**	**24 TX-SS**	**24 TX-B**
2	30.0	61.0	156	**32 TX-S**	**32 TX-SS**	**32 TX-B**

Order codes shown are part of our current manufacturing programme.
Do not create drawings from these dimensions, they are subject to change and ISO manufacturing allowances.

Kovaci

HMTX Union

Triple-Lok® 37° Flare ends
SAE 070101 MS51501

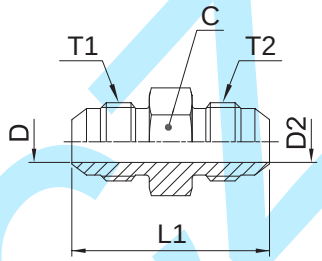

Tube 1 O.D. mm	Tube 1 O.D. in.	Tube 2 O.D. mm	Tube 2 O.D. in.	Thread UN/UNF-2A T1	Thread UN/UNF-2A T2	C mm	D mm	D2 mm	L1 mm	Weight (steel) g/1 piece	Triple-Lok® Steel	Triple-Lok® Stainless Steel	Triple-Lok® Brass	PN (bar) S	PN (bar) SS
	1/8		1/8	5/16-24	5/16-24	11.0	1.5	1.5	30.0	9	**2 HTX-S**			500	—
	3/16		3/16	3/8-24	3/8-24	11.0	3.0	3.0	31.0	10	**3 HTX-S**			500	—
6	1/4	6	1/4	7/16-20	7/16-20	14.0	4.5	4.5	35.0	16	**4HMTXS**	**4HMTXSS**	**4HMTXB**	500	350
6	1/4		1/8	7/16-20	5/16-24	12.5	4.4	1.6	32.0	12	**4-2 HTX-S**	**4-2HMTXSS**	**4-2HMTXB**	500	350
6	1/4		3/16	7/16-20	3/8-24	12.5	4.4	3.0	33.0	14	**4-3 HTX-S**	**4-3HMTXSS**	**4-3HMTXB**	500	350
8	5/16	8	5/16	1/2-20	1/2-20	14.0	6.0	6.0	35.0	18	**5HMTXS**	**5HMTXSS**	**5HMTXB**	420	350
8	5/16	6	1/4	1/2-20	7/16-20	14.0	6.0	4.5	35.0	18	**5-4HMTXS**	**5-4HMTXSS**	**5-4HMTXB**	420	350
10	3/8	10	3/8	9/16-18	9/16-18	17.0	7.5	7.5	36.0	25	**6HMTXS**	**6HMTXSS**	**6HMTXB**	420	350
10	3/8	6	1/4	9/16-18	7/16-20	17.0	7.5	4.5	35.5	22	**6-4HMTXS**	**6-4HMTXSS**	**6-4HMTXB**	420	350
10	3/8	8	5/16	9/16-18	1/2-20	17.0	7.5	6.0	36.0	25	**6-5 HTX-S**	**6-5HMTXSS**	**6-5HMTXB**	420	350
12	1/2	12	1/2	3/4-16	3/4-16	19.0	9.9	9.9	41.0	52	**8HMTXS**	**8HMTXSS**	**8HMTXB**	420	350
12	1/2	6	1/4	3/4-16	7/16-20	20.6	9.9	4.5	38.5	45	**8-4 HTX-S**	**8-4HMTXSS**	**8-4HMTXB**	420	350
12	1/2	10	3/8	3/4-16	9/16-18	20.6	9.9	7.5	38.5	45	**8-6 HTX-S**	**8-6HMTXSS**	**8-6HMTXB**	420	350
14, 15,16	5/8	14, 15,16	5/8	7/8-14	7/8-14	24.0	12.0	12.0	48.0	80	**10HMTXS**	**10HMTXSS**	**10HMTXB**	350	350
14, 15,16	5/8	10	3/8	7/8-14	9/16-18	24.0	12.3	7.5	43.0	60	**10-6HMTXS**	**10-6HMTXSS**	**10-6HMTXB**	350	350
14, 15,16	5/8	12	1/2	7/8-14	3/4-16	23.8	12.3	9.9	45.0	68	**10-8 HTX-S**	**10-8HMTXSS**	**10-8HMTXB**	350	350
18, 20	3/4	18, 20	3/4	1 1/16-12	1 1/16-12	27.0	15.5	15.5	55.0	125	**12HMTXS**	**12HMTXSS**	**12HMTXB**	350	350
18, 20	3/4	12	1/2	1 1/16-12	3/4-16	28.5	15.5	9.9	49.5	101	**12-8 HTX-S**	**12-8HMTXSS**	**12-8HMTXB**	350	350
20	3/4	14, 15,16	5/8	1 1/16-12	7/8-14	27.0	15.5	12.3	52.0	113	**12-10HMTXS**	**12-10HMTXSS**	**12-10HMTXB**	350	350
22	7/8	22	7/8	1 3/16-12	1 3/16-12	32.0	18.0	18.0	56.0	156	**14 HTX-S**	**14HMTXSS**	**14HMTXB**	280	280
25	1	25	1	1 5/16-12	1 5/16-12	36.0	21.5	21.5	57.0	131	**16HMTXS**	**16HMTXSS**	**16HMTXB**	280	280
25	1	20	3/4	1 5/16-12	1 1/16-12	36.0	21.5	15.5	56.0	169	**16-12HMTXS**	**16-12HMTXSS**	**16-12HMTXB**	280	280
28, 30, 32	1 1/4	28, 30, 32	1 1/4	1 5/8-12	1 5/8-12	46.0	27.5	27.5	62.0	271	**20HMTXS**	**20HMTXSS**	**20HMTXB**	280	210
28, 30, 32	1 1/4	18, 20	3/4	1 5/8-12	1 1/16-12	46.0	27.5	15.5	59.5	302	**20-12HMTXS**	**20-12HMTXSS**	**20-12HMTXB**	280	210
28, 30, 32	1 1/4	25	1	1 5/8-12	1 5/16-12	46.0	27.5	21.5	60.5	313	**20-16HMTXS**	**20-16HMTXSS**	**20-16HMTXB**	280	210
35, 38	1 1/2	35, 38	1 1/2	1 7/8-12	1 7/8-12	50.0	33.0	33.0	70.0	382	**24HMTXS**	**24HMTXSS**	**24HMTXB**	210	210
42		42		2 1/4-12	2 1/4-12	60.0	39.0	39.0	71.5	469	**28HMTXS**	**28HMTXSS**	**28HMTXB**	140	150
	2		2	2 1/2-12	2 1/2-12	67.0	45.0	45.0	86.5	785	**32 HTX-S**	**32HMTXSS**	**32HMTXB**	140	150

Order codes shown are part of our current manufacturing programme.

Imperial and metric parts may vary in hexagon dimensions.

$\frac{\text{PN (bar)}}{10}$ = PN (MPa)

Pressure ratings – PN shown, apply to Steel and Stainless Steel versions of the product.

For Brass parts reduce pressures by 35%.

Do not create drawings from these dimensions, they are subject to change and ISO manufacturing allowances.

KOMAC

EMTX Union elbow

Triple-Lok® 37° Flare ends
SAE 070201 MS51505

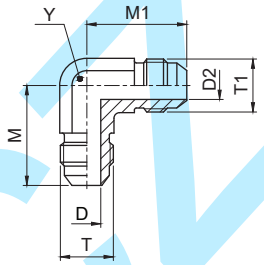

Tube O.D. mm	Tube O.D. in.	Thread UN/UNF-2A T	Thread UN/UNF-2A T1	D mm	D2 mm	M mm	M1 mm	Y mm	Weight (steel) g/1 piece	Triple-Lok® Steel	Triple-Lok® Stainless Steel	Triple-Lok® Brass	PN (bar) S	PN (bar) SS
	1/8	5/16-24	5/16-24	1.6	1.6	20.0	20.0	11	18	**2 ETX-S**			500	—
	3/16	3/8-24	3/8-24	3.0	3.0	21.0	21.0	11	20	**3 ETX-S**			500	—
6	1/4	7/16-20	7/16-20	4.4	4.4	22.5	22.5	11	25	**4EMTXS**	**4EMTXSS**	**4 ETX-B**	500	350
8	5/16	1/2-20	1/2-20	6.0	6.0	24.0	24.0	13	32	**5EMTXS**	**5EMTXSS**	**5 ETX-B**	420	350
10	3/8	9/16-18	9/16-18	7.5	7.5	27.0	27.0	14	44	**6EMTXS**	**6EMTXSS**	**6 ETX-B**	420	350
10	3/8	9/16-18	7/16-20	7.5	4.4	27.0	27.0	14	40	**6-4 ETX-S**	**6-4EMTXSS**	**6-4 ETX-B**	420	350
12	1/2	3/4-16	3/4-16	9.9	9.9	32.0	32.0	19	88	**8EMTXS**	**8EMTXSS**	**8 ETX-B**	420	350
12	1/2	3/4-16	9/16-18	9.9	7.5	32.0	29.0	19	75	**8-6 ETX-S**	**8-6EMTXSS**		420	—
14, 15,16	5/8	7/8-14	7/8-14	12.3	12.3	37.0	37.0	22	139	**10EMTXS**	**10EMTXSS**	**10 ETX-B**	350	350
14, 15,16	5/8	7/8-14	3/4-16	12.3	9.9	37.0	34.0	22	120	**10-8 ETX-S**	**10-8EMTXSS**	**10-8 ETX-B**	350	350
18, 20	3/4	1 1/16-12	1 1/16-12	15.5	15.5	42.0	42.0	27	258	**12EMTXS**	**12EMTXSS**	**12 ETX-B**	350	350
18, 20	3/4	1 1/16-12	3/4-16	15.5	9.9	42.0	36.0	27	220	**12-8 ETX-S**	**12-8EMTXSS**		350	—
18, 20	3/4	1 1/16-12	7/8-14	15.5	12.3	42.0	39.0	27	240	**12-10 ETX-S**	**12-10EMTXSS**		350	—
22	7/8	1 3/16-12	1 3/16-12	18.3	18.3	45.5	45.5	30	273	**14 ETX-S**	**14EMTXSS**		280	—
22, 25	1	1 5/16-12	1 5/16-12	21.5	21.5	46.0	46.0	33	333	**16EMTXS**	**16EMTXSS**	**16 ETX-B**	280	280
22, 25	1	1 5/16-12	1 1/16-12	21.5	15.5	46.0	45.0	33	310	**16-12 ETX-S**	**16-12EMTXSS**	**16-12 ETX-B**	280	280
28, 30, 32	1 1/4	1 5/8-12	1 5/8-12	27.5	27.5	52.0	52.0	41	586	**20EMTXS**	**20EMTXSS**	**20 ETX-B**	280	210
35, 38	1 1/2	1 7/8-12	1 7/8-12	33.0	33.0	59.0	59.0	48	778	**24EMTXS**	**24EMTXSS**	**24 ETX-B**	210	140
42	1 3/4	2 1/4-12	2 1/4-12	39.0	39.0	74.0	74.0	63	1100	**28 ETX-S**			140	—
	2	2 1/2-12	2 1/2-12	45.0	45.0	78.0	78.0	64	1680	**32 ETX-S**			140	—

Order codes shown are part of our current manufacturing programme.

Imperial and metric parts may vary in hexagon dimensions.

$\frac{\text{PN (bar)}}{10}$ = PN (MPa)

Pressure ratings – PN shown, apply to Steel and Stainless Steel versions of the product.

For Brass parts reduce pressures by 35%.

Do not create drawings from these dimensions, they are subject to change and ISO manufacturing allowances.

KOVOZ

JMTX Union tee

Triple-Lok® 37° Flare end (three ends)
SAE 070401 MS51510

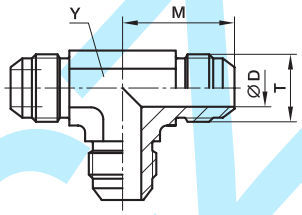

Tube O.D. mm	Tube O.D. in.	Thread UN/UNF-2A T	D mm	M mm	Y mm	Weight (steel) g/1 piece	Triple-Lok® Steel	Triple-Lok® Stainless Steel	Triple-Lok® Brass	PN (bar) S	PN (bar) SS
	1/8	5/16-24	1.6	19.5	8.0	25	**2 JTX-S**			500	—
	3/16	3/8-24	3.0	21.0	11.0	30	**3 JTX-S**			500	—
6	1/4	7/16-20	4.4	22.5	11.0	33	**4JMTXS**	**4JMTXSS**	**4 JTX-B**	500	350
8	5/16	1/2-20	6.0	24.0	13.0	42	**5JMTXS**	**5JMTXSS**	**5 JTX-B**	420	350
10	3/8	9/16-18	7.5	27.0	14.0	53	**6JMTXS**	**6JMTXSS**	**6 JTX-B**	420	350
12	1/2	3/4-16	9.9	32.0	19.0	118	**8JMTXS**	**8JMTXSS**	**8 JTX-B**	420	350
14, 15,16	5/8	7/8-14	12.3	37.0	22.0	182	**10JMTXS**	**10JMTXSS**	**10 JTX-B**	350	350
18, 20	3/4	1 1/16-12	15.5	42.0	27.0	291	**12JMTXS**	**12JMTXSS**	**12 JTX-B**	350	350
22	7/8	1 3/16-12	18.0	45.8	33.0	403	**14 JTX-S**	**14JMTXSS**	**14 JTX-B**	280	245
25	1	1 5/16-12	21.5	46.0	33.0	415	**16JMTXS**	**16JMTXSS**	**16 JTX-B**	280	280
28, 30, 32	1 1/4	1 5/8-12	27.5	52.0	41.0	706	**20JMTXS**	**20JMTXSS**	**20 JTX-B**	280	210
35, 38	1 1/2	1 7/8-12	33.0	59.0	48.0	990	**24 JTX-S**	**24JMTXSS**	**24 JTX-B**	210	140
42	1 3/4	2 1/4-12	39.0	74.5	63.0	2270	**28 JTX-S**			140	—
	2	2 1/2-12	45.0	78.0	63.5	2450	**32 JTX-S**			140	—

Order codes shown are part of our current manufacturing programme.

Imperial and metric parts may vary in hexagon dimensions.

$$\frac{\text{PN (bar)}}{10} = \text{PN (MPa)}$$

Pressure ratings – PN shown, apply to Steel and Stainless Steel versions of the product.

For Brass parts reduce pressures by 35%.

Union tee reducing up on request.

Do not create drawings from these dimensions, they are subject to change and ISO manufacturing allowances.

KOVAL.CZ

KTX Union cross

Triple-Lok® 37° Flare end (four ends)
SAE 070501 MS51517

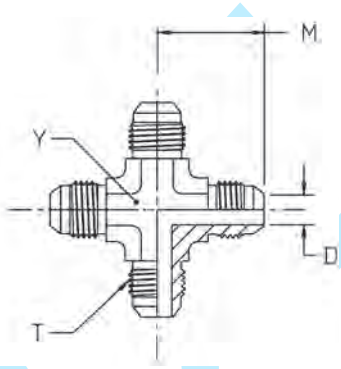

Tube O.D. mm	Tube O.D. in.	Thread UN/UNF-2A T	D mm	M mm	Y mm	Weight (steel) g/1 piece	Triple-Lok® Steel	Triple-Lok® Stainless Steel	Triple-Lok® Brass	PN (bar) S	PN (bar) SS
6	1/4	7/16-20	4.4	22.5	11	41	**4 KTX-S**	**4 KTX-SS**	**4 KTX-B**	500	350
8	5/16	1/2-20	6.0	24.0	14	50	**5 KTX-S**	**5 KTX-SS**	**5 KTX-B**	420	350
10	3/8	9/16-18	7.5	27.0	14	68	**6 KTX-S**	**6 KTX-SS**	**6 KTX-B**	420	350
12	1/2	3/4-16	9.9	31.8	19	144	**8 KTX-S**	**8 KTX-SS**	**8 KTX-B**	420	350
14, 15,16	5/8	7/8-14	12.0	37.0	22	220	**10 KTX-S**	**10 KTX-SS**	**10 KTX-B**	350	350
18, 20	3/4	1 1/16-12	15.5	42.0	27	345	**12 KTX-S**	**12 KTX-SS**	**12 KTX-B**	350	350
25	1	1 5/16-12	21.5	46.0	33	588	**16 KTX-S**	**16 KTX-SS**	**16 KTX-B**	280	280

Order codes shown are part of our current manufacturing programme.

Imperial and metric parts may vary in hexagon dimensions.

$\frac{\text{PN (bar)}}{10}$ = PN (MPa)

Pressure ratings – PN shown, apply to Steel and Stainless Steel versions of the product.

For Brass parts reduce pressures by 35%.

Do not create drawings from these dimensions, they are subject to change and ISO manufacturing allowances.

Kovaz

WMTX Bulkhead union

Triple-Lok® 37° Flare ends
SAE 070601 MS51520

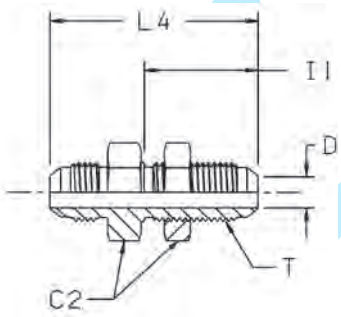

Tube O.D. mm	Tube O.D. in.	Thread UN/UNF-2A T	C2 mm	D mm	I1 mm	L4 mm	Weight (steel) g/1 piece	Triple-Lok® Steel	Triple-Lok® Stainless Steel	Triple-Lok® Brass	PN (bar) S	PN (bar) SS
6	1/4	7/16-20	17	4.4	30.5	52.5	41	**4WMTXWLNMS**	**4WMTXWLNMSS**	**4WMTXWLNMB**	500	350
8	5/16	1/2-20	19	6.0	30.5	52.5	49	**5WMTXWLNMS**	**5WMTXWLNMSS**	**5WMTXWLNMB**	420	350
10	3/8	9/16-18	22	7.5	32.5	55.5	64	**6WMTXWLNMS**	**6WMTXWLNMSS**	**6WMTXWLNMB**	420	350
12	1/2	3/4-16	24	9.9	36.5	62.0	111	**8WMTXWLNMS**	**8WMTXWLNMSS**	**8WMTXWLNMB**	420	350
14, 15,16	5/8	7/8-14	30	12.3	40.0	70.0	157	**10WMTXWLNMS**	**10WMTXWLNMSS**	**10WMTXWLNMB**	350	350
18, 20	3/4	1 1/16-12	36	15.5	44.5	78.5	254	**12WMTXWLNMS**	**12WMTXWLNMSS**	**12WMTXWLNMB**	350	350
22	7/8	1 3/16-12	38	18.3	44.5	79.3	296	**14 WTX-WLN-S**	**14WMTXWLNMSS**	**14WMTXWLNMB**	280	280
25	1	1 5/16-12	41	21.5	44.5	80.0	337	**16WMTXWLNMS**	**16WMTXWLNMSS**	**16WMTXWLNMB**	280	280
28, 30, 32	1 1/4	1 5/8-12	50	27.5	46.0	84.0	462	**20WMTXWLNMS**	**20WMTXWLNMSS**	**20WMTXWLNMB**	280	210
35, 38	1 1/2	1 7/8-12	55	33.0	46.0	89.5	695	**24WMTXWLNMS**	**24WMTXWLNMSS**	**24WMTXWLNMB**	210	140

Order codes shown are part of our current manufacturing programme.

Imperial and metric parts may vary in hexagon dimensions.

For the version without the locknut remove “WLNM” (e. g. 16WMTX)

$\frac{\text{PN (bar)}}{10}$ = PN (MPa)

Pressure ratings – PN shown, apply to Steel and Stainless Steel versions of the product.

For Brass parts reduce pressures by 35%.

Do not create drawings from these dimensions, they are subject to change and ISO manufacturing allowances.

Maximum bulkhead wallthickness

Size	Tube O.D. inch	Tube O.D. metric	Straight bulkhead union Max. thickness mm	Shape bulkhead union Max. thickness mm
4	1/4	6	8.4	5.3
5	5/16	8	8.4	5.3
6	3/8	10	10.7	7.1
8	1/2	12	11.2	8.4
10	5/8	14–16	10.9	8.1
12	3/4	18–20	11.2	8.6
14	7/8	22	10.4	7.9
16	1	25	9.9	7.4
20	1 1/4	28–32	10.2	7.4
24	1 1/2	35–38	7.1	—
32	2		7.1	—

WEMTX Bulkhead union elbow

Triple-Lok® 37° Flare ends
SAE 070701 MS51507

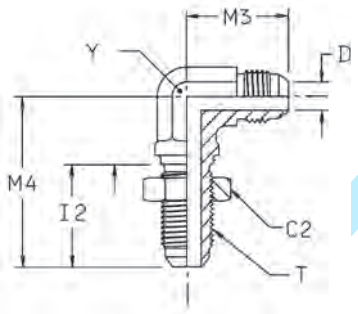

Tube O.D. mm	Tube O.D. in.	Thread UN/UNF-2A T	C2 mm	D mm	I2 mm	M3 mm	M4 mm	Y mm	Weight (steel) g/1 piece	Triple-Lok® Steel	Triple-Lok® Stainless Steel	Triple-Lok® Brass	PN (bar) S	PN (bar) SS
6	1/4	7/16-20	17.5	4.4	23	25.0	40	11	44	**4 WETX-WLN-S**	**4 WETX-WLN-SS**	**4 WETX-WLN-B**	500	350
8	5/16	1/2-20	19.0	6.0	26	27.0	44	14	59	**5 WEMTXWLNMS**	**5 WETX-WLN-SS**	**5 WETX-WLN-B**	420	350
10	3/8	9/16-18	22.0	7.5	28	28.0	46	14	72	**6WEMTXWLNMS**	**6 WETX-WLN-SS**	**6 WETX-WLN-B**	420	350
12	1/2	3/4-16	24.0	9.9	32	34.5	54	19	145	**8WEMTXWLNMS**	**8 WETX-WLN-SS**	**8 WETX-WLN-B**	420	350
14, 15,16	5/8	7/8-14	30.0	12.0	35	40.0	61	22	212	**10WEMTXWLNMS**	**10 WETX-WLN-SS**	**10 WETX-WLN-B**	350	350
18, 20	3/4	1 1/16-12	36.0	15.5	40	45.0	68	27	345	**12WEMTXWLNMS**	**12 WETX-WLN-SS**	**12 WETX-WLN-B**	350	350
22	7/8	1 3/16-12	38.0	18.0	40	49.0	71	33	370	**14 WETX-WLN-S**	**14 WETX-WLN-SS**		280	280
25	1	1 5/16-12	41.0	21.5	40	49.0	71	33	474	**16 WETX-WLN-S**	**16 WETX-WLN-SS**		280	280
28, 30, 32	1 1/4	1 5/8-12	47.6	27.4	41	55.0	79	41	753	**20 WETX-WLN-S**	**20 WETX-WLN-SS**		280	280

Order codes shown are part of our current manufacturing programme.

Imperial and metric parts may vary in hexagon dimensions.

For the version without the locknut remove “WLNM” (e. g. 16WETX)

$\frac{\text{PN (bar)}}{10}$ = PN (MPa)

Pressure ratings – PN shown, apply to Steel and Stainless Steel versions of the product.

For Brass parts reduce pressures by 35%.

Do not create drawings from these dimensions, they are subject to change and ISO manufacturing allowances.

Maximum bulkhead wallthickness

Size	Tube O.D. inch	Tube O.D. metric	Straight bulkhead union Max. thickness mm	Shape bulkhead union Max. thickness mm
4	1/4	6	8.4	5.3
5	5/16	8	8.4	5.3
6	3/8	10	10.7	7.1
8	1/2	12	11.2	8.4
10	5/8	14–16	10.9	8.1
12	3/4	18–20	11.2	8.6
14	7/8		10.4	7.9
16	1	22–25	9.9	7.4
20	1 1/4	28–32	10.2	7.4
24	1 1/2	35–38	7.1	—
32	2		7.1	—

WNTX 45° Bulkhead union elbow

Triple-Lok® 37° Flare ends
SAE 070801 MS51509

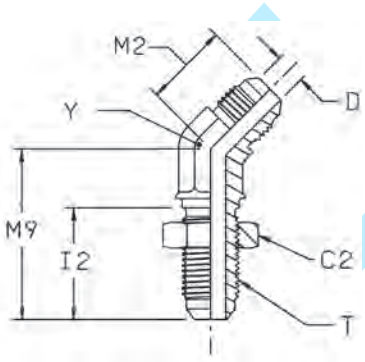

Tube O.D. mm	Tube O.D. in.	Thread UN/UNF-2A T	C2 mm	D mm	I2 mm	M2 mm	M9 mm	Y mm	Weight (steel) g/1 piece	Triple-Lok® Steel	Triple-Lok® Stainless Steel	PN (bar) S	PN (bar) SS
6	1/4	7/16-20	17.5	4.4	26	18	39	11	32	**4 WNTX-WLN-S**	**4 WNTX-WLN-SS**	500	350
8	5/16	1/2-20	19.0	6.0	26	20	42	14	41	**5 WNTX-WLN-S**		420	—
10	3/8	9/16-18	20.5	7.5	28	21	42	14	48	**6 WNTX-WLN-S**	**6 WNTX-WLN-SS**	420	350
12	1/2	3/4-16	25.5	9.9	32	33	62	19	105	**8 WNTX-WLN-S**	**8 WNTX-WLN-SS**	420	350
14, 15,16	5/8	7/8-14	28.5	12.3	35	28	55	22	152	**10 WNTX-WLN-S**	**10 WNTX-WLN-SS**	350	350
18, 20	3/4	1 1/16-12	35.0	15.5	40	33	62	27	245	**12 WNTX-WLN-S**	**12 WNTX-WLN-SS**	350	350
22, 25	1	1 5/16-12	41.0	21.5	40	37	65	33	355	**16 WNTX-WLN-S**	**16 WNTX-WLN-SS**	280	280
28, 30, 32	1 1/4	1 5/8-12	47.6	27.4	41	40	67	41	465	**20 WNTX-WLN-S**		280	—

Order codes shown are part of our current manufacturing programme.

Imperial and metric parts may vary in hexagon dimensions.

For the version without the locknut remove “WLN” (e.g. 16 WNTX)

$\frac{\text{PN (bar)}}{10}$ = PN (MPa)

Do not create drawings from these dimensions, they are subject to change and ISO manufacturing allowances.

Maximum bulkhead wallthickness

Size	Tube O.D. inch	Tube O.D. metric	Straight bulkhead union Max. thickness mm	Shape bulkhead union Max. thickness mm
4	1/4	6	8.4	5.3
5	5/16	8	8.4	5.3
6	3/8	10	10.7	7.1
8	1/2	12	11.2	8.4
10	5/8	14–16	10.9	8.1
12	3/4	18–20	11.2	8.6
14	7/8		10.4	7.9
16	1	22–25	9.9	7.4
20	1 1/4	28–32	10.2	7.4
24	1 1/2	35–38	7.1	—
32	2		7.1	—

WJTX Bulkhead branch tee

Triple-Lok® 37° Flare ends
SAE 070959 MS51515

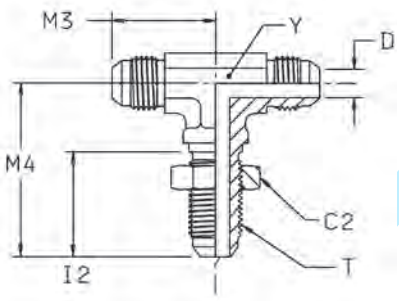

Tube O.D. mm	Tube O.D. in.	Thread UN/UNF-2A T	C2 mm	D mm	I2 mm	M3 mm	M4 mm	Y mm	Weight (steel) g/1 piece	Triple-Lok® Steel	Triple-Lok® Stainless Steel	PN (bar) S	PN (bar) SS
6	1/4	7/16-20	17.5	4.4	26	25	40	11.0	45	**4 WJTX-WLN-S**	**4 WJTX-WLN-SS**	500	350
10	3/8	9/16-18	20.6	7.5	28	28	46	14.0	71	**6 WJTX-WLN-S**	**6 WJTX-WLN-SS**	420	350
12	1/2	3/4-16	25.0	9.9	32	35	54	19.0	158	**8 WJTX-WLN-S**	**8 WJTX-WLN-SS**	420	350
14, 15,16	5/8	7/8-14	28.5	12.0	35	40	61	27.0	297	**10 WJTX-WLN-S**	**10 WJTX-WLN-SS**	350	350
18, 20	3/4	1 1/16-12	35.0	15.5	40	45	68	27.0	379	**12 WJTX-WLN-S**	**12 WJTX-WLN-SS**	350	350
22, 25	1	1 5/16-12	41.3	21.4	40	49	71	33.0	420	**16 WJTX-WLN-S**		280	—
28, 30, 32	1 1/4	1 5/8-12	47.6	24.4	41	55	79	44.5	500	**20 WJTX-WLN-S**		280	—

Order codes shown are part of our current manufacturing programme.

Imperial and metric parts may vary in hexagon dimensions.

For the version without the locknut remove “WLN” (e.g. 16 WJTX)

$\frac{\text{PN (bar)}}{10}$ = PN (MPa)

Do not create drawings from these dimensions, they are subject to change and ISO manufacturing allowances.

Maximum bulkhead wallthickness

Size	Tube O.D. inch	Tube O.D. metric	Straight bulkhead union Max. thickness mm	Shape bulkhead union Max. thickness mm
4	1/4	6	8.4	5.3
5	5/16	8	8.4	5.3
6	3/8	10	10.7	7.1
8	1/2	12	11.2	8.4
10	5/8	14–16	10.9	8.1
12	3/4	18–20	11.2	8.6
14	7/8		10.4	7.9
16	1	22–25	9.9	7.4
20	1 1/4	28–32	10.2	7.4
24	1 1/2	35–38	7.1	—
32	2		7.1	—

WJJTX Bulkhead run tee

Triple-Lok® 37° Flare ends
SAE 070958 MS51516

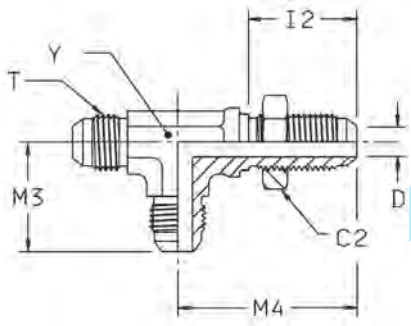

Tube O.D. mm	Tube O.D. in.	Thread UN/UNF-2A T	C2 mm	D mm	I2 mm	M3 mm	M4 mm	Y mm	Weight (steel) g/1 piece	Triple-Lok® Steel	PN (bar)
6	1/4	7/16-20	17.5	4.4	26	25	40	11.0	58	**4 WJJTX-WLN-S**	500
10	3/8	9/16-18	20.6	7.5	28	28	46	14.0	75	**6 WJJTX-WLN-S**	420
12	1/2	3/4-16	25.0	9.9	32	35	54	19.0	158	**8 WJJTX-WLN-S**	420
14, 15,16	5/8	7/8-14	28.5	12.0	35	40	61	27.0	309	**10 WJJTX-WLN-S**	350
18, 20	3/4	1 1/16-12	35.0	15.5	40	45	68	27.0	340	**12 WJJTX-WLN-S**	350
22, 25	1	1 5/16-12	41.3	21.5	40	49	71	36.5	390	**16 WJJTX-WLN-S**	280
28, 30, 32	1 1/4	1 5/8-12	47.6	27.5	41	55	79	44.5	450	**20 WJJTX-WLN-S**	280

Order codes shown are part of our current manufacturing programme.

Imperial and metric parts may vary in hexagon dimensions.

For the version without the locknut remove “WLN” (e.g. 16 WJJTX)

$\frac{\text{PN (bar)}}{10}$ = PN (MPa)

Do not create drawings from these dimensions, they are subject to change and ISO manufacturing allowances.

Maximum bulkhead wallthickness

Size	Tube O.D. inch	Tube O.D. metric	Straight bulkhead union Max. thickness mm	Shape bulkhead union Max. thickness mm
4	1/4	6	8.4	5.3
5	5/16	8	8.4	5.3
6	3/8	10	10.7	7.1
8	1/2	12	11.2	8.4
10	5/8	14–16	10.9	8.1
12	3/4	18–20	11.2	8.6
14	7/8		10.4	7.9
16	1	22–25	9.9	7.4
20	1 1/4	28–32	10.2	7.4
24	1 1/2	35–38	7.1	—
32	2		7.1	—

C6MX Swivel nut elbow

Triple-Lok® 37° Flare end / Triple-Lok® 37° Flare female swivel end
SAE 070221 MS51521

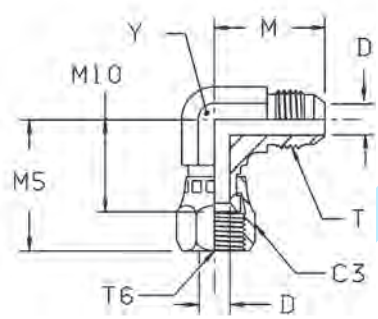

Tube O.D. mm	Tube O.D. in.	Thread UN/UNF-2A T	Thread UN/UNF-2B T6	C3 mm	D mm	M mm	M5 mm	M10 mm	Y mm	Weight (steel) g/1 piece	Triple-Lok® Steel	Triple-Lok® Stainless Steel	PN (bar) S	PN (bar) SS
	3/16	3/8-24	3/8-24		3.0	21	25	18		27	**3 C6X-S**		500	—
6	1/4	7/16-20	7/16-20	14	4.4	23	25	17	11	37	**4C6MXS**	**4C6MXSS**	500	350
8	5/16	1/2-20	1/2-20	17	6.0	24	25	17	13	43	**5C6MXS**	**5C6MXSS**	420	350
10	3/8	9/16-18	9/16-18	19	7.5	27	27	22	14	54	**6C6MXS**	**6C6MXSS**	350	350
12	1/2	3/4-16	3/4-16	22	9.9	32	34	24	19	105	**8C6MXS**	**8C6MXSS**	350	350
14, 15,16	5/8	7/8-14	7/8-14	27	12.0	37	40	28	22	162	**10C6MXS**	**10C6MXSS**	350	350
18, 20	3/4	1 1/16-12	1 1/16-12	32	15.5	42	42	30	27	260	**12C6MXS**	**12C6MXSS**	350	350
22	7/8	1 3/16-12	1 3/16-12	35	18.3	46	45	34	33	293	**14 C6X-S**		250	—
25	1	1 5/16-12	1 5/16-12	38	21.5	46	52	37	33	420	**16C6MXS**	**16C6MXSS**	250	250
28, 30, 32	1 1/4	1 5/8-12	1 5/8-12	50	27.5	52	59	43	41	679	**20C6MXS**	**20C6MXSS**	250	210
35, 38	1 1/2	1 7/8-12	1 7/8-12	57	33.0	59	67	47	48	747	**24 C6X-S**	**24C6MXSS**	170	140
	2	2 1/2-12	2 1/2-12	73	45.0	78	87	62	64	920	**32 C6X-S**		110	—

Order codes shown are part of our current manufacturing programme.

Imperial and metric parts may vary in hexagon dimensions.

$\frac{\text{PN (bar)}}{10} = \text{PN (MPa)}$

Do not create drawings from these dimensions, they are subject to change and ISO manufacturing allowances.

V6MX 45° Swivel nut elbow

Triple-Lok® 37° Flare end / Triple-Lok® 37° Flare female swivel end
SAE 070321 MS51522

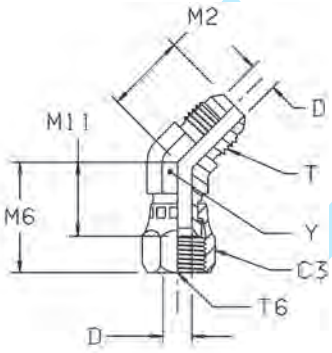

Tube O.D. mm	Tube O.D. in.	Thread UN/UNF-2A T	Thread UN/UNF-2B T6	C3 mm	D mm	M2 mm	M6 mm	M11 mm	Y mm	Weight (steel) g/1 piece	Triple-Lok® Steel	Triple-Lok® Stainless Steel	PN (bar) S	PN (bar) SS
6	1/4	7/16-20	7/16-20	14.3	4.4	18	24	15	11.0	30	**4 V6X-S**	**4 V6X-SS**	500	350
8	5/16	1/2-20	1/2-20	16.0	6.0	20	26	16	14.0	45	**5 V6X-S**	**5 V6X-SS**	420	350
10	3/8	9/16-18	9/16-18	19.0	7.5	21	29	19	14.0	47	**6V6MXS**	**6 V6X-SS**	350	350
12	1/2	3/4-16	3/4-16	22.0	9.9	25	33	22	19.0	89	**8V6MXS**	**8 V6X-SS**	350	350
14, 15,16	5/8	7/8-14	7/8-14	27.0	12.3	28	37	24	22.0	131	**10V6MXS**	**10 V6X-SS**	350	350
18, 20	3/4	1 1/16-12	1 1/16-12	32.0	15.5	33	38	24	27.0	203	**12V6MXS**	**12 V6X-SS**	350	350
22	7/8	1 3/16-12	1 3/16-12	35.0	18.2	37	43	28	30.0	291	**14 V6X-S**		250	—
25	1	1 5/16-12	1 5/16-12	38.0	21.4	37	46	30	33.3	335	**16 V6X-S**	**16 V6X-SS**	250	250
28, 30, 32	1 1/4	1 5/8-12	1 5/8-12	50.8	27.3	40	53	36	41.0	572	**20 V6X-S**	**20 V6X-SS**	250	210
35, 38	1 1/2	1 7/8-12	1 7/8-12	57.0	33.3	45	58	39	48.0	715	**24 V6X-S**	**24 V6X-SS**	170	140
	2	2 1/2-12	2 1/2-12	73.0	45.2	56	73	50	66.0	960	**32 V6X-S**	**32 V6X-SS**	110	110

Order codes shown are part of our current manufacturing programme.

Imperial and metric parts may vary in hexagon dimensions.

$\frac{\text{PN (bar)}}{10}$ = PN (MPa)

Do not create drawings from these dimensions, they are subject to change and ISO manufacturing allowances.

Kovar

S6MX Swivel nut branch tee

Triple-Lok® 37° Flare ends / Triple-Lok® 37° Flare female swivel end
SAE 070433 MS51524

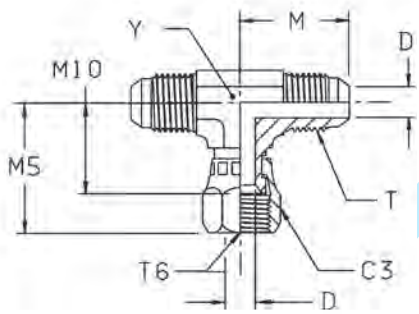

Tube O.D. mm	Tube O.D. in.	Thread UN/UNF-2A T	Thread UN/UNF-2B T6	C3 mm	D mm	M mm	M5 mm	M10 mm	Y mm	Weight (steel) g/1 piece	Triple-Lok® Steel	Triple-Lok® Stainless Steel	PN (bar) S	PN (bar) SS
6	1/4	7/16-20	7/16-20	14.3	4.4	23	26	17	11.0	44	**4 S6X-S**	**4 S6X-SS**	500	350
8	5/16	1/2-20	1/2-20	17.0	6.0	24	27	17	13.0	58	**5S6MXS**	**5 S6X-SS**	420	350
10	3/8	9/16-18	9/16-18	19.0	7.5	27	32	22	14.0	71	**6S6MXS**	**6 S6X-SS**	350	350
12	1/2	3/4-16	3/4-16	22.0	9.9	32	35	24	19.0	133	**8S6MXS**	**8 S6X-SS**	350	350
14, 15,16	5/8	7/8-14	7/8-14	27.0	12.3	37	41	28	22.0	203	**10S6MXS**	**10 S6X-SS**	350	350
18, 20	3/4	1 1/16-12	1 1/16-12	32.0	15.5	42	43	30	27.0	328	**12S6MXS**	**12 S6X-SS**	350	350
25	1	1 5/16-12	1 5/16-12	38.0	21.5	46	52	36	33.0	483	**16S6MXS**	**16 S6X-SS**	250	250
28, 30, 32	1 1/4	1 5/8-12	1 5/8-12	50.8	27.3	52	60	43	41.0	708	**20 S6X-S**	**20 S6X-SS**	250	210
35, 38	1 1/2	1 7/8-12	1 7/8-12	57.0	33.3	59	68	49	47.7	1100	**24 S6X-S**	**24 S6X-SS**	170	170

Order codes shown are part of our current manufacturing programme.

Imperial and metric parts may vary in hexagon dimensions.

$\frac{\text{PN (bar)}}{10}$ = PN (MPa)

Do not create drawings from these dimensions, they are subject to change and ISO manufacturing allowances.

Kovaz

R6MX Swivel nut run tee

Triple-Lok® 37° Flare ends / Triple-Lok® 37° Flare female swivel end
SAE 070432

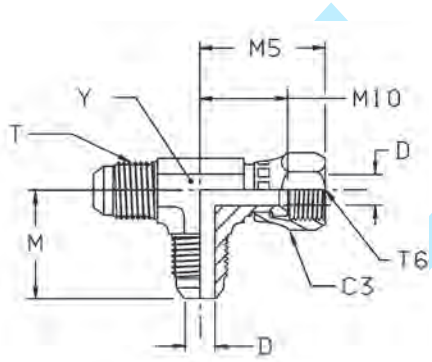

Tube O.D. mm	Tube O.D. in.	Thread UN/UNF-2A T	Thread UN/UNF-2B T6	C3 mm	D mm	M mm	M5 mm	M10 mm	Y mm	Weight (steel) g/1 piece	Triple-Lok® Steel	Triple-Lok® Stainless Steel	PN (bar) S	PN (bar) SS
6	1/4	7/16-20	7/16-20	14.0	4.4	23	26	17	11.0	44	**4R6MXS**	**4 R6X-SS**	500	350
8	5/16	1/2-20	1/2-20	17.0	6.0	24	26	17	13.0	56	**5R6MXS**	**5 R6X-SS**	420	350
10	3/8	9/16-18	9/16-18	19.0	7.5	27	32	22	14.0	69	**6R6MXS**	**6 R6X-SS**	350	350
12	1/2	3/4-16	3/4-16	22.0	9.9	32	35	24	19.0	136	**8R6MXS**	**8 R6X-SS**	350	350
14, 15,16	5/8	7/8-14	7/8-14	27.0	12.3	37	41	28	22.0	207	**10R6MXS**	**10 R6X-SS**	350	350
18, 20	3/4	1 1/16-12	1 1/16-12	32.0	15.5	42	43	30	27.0	319	**12R6MXS**	**12 R6X-SS**	350	350
22	7/8	1 3/16-12	1 3/16-12	35.0	18.2	46	46	49	34.0	333	**14 R6X-S**	**14 R6MX-SS**	250	250
25	1	1 5/16-12	1 5/16-12	38.0	21.5	46	51	36	33.0	489	**16R6MXS**	**16 R6X-SS**	250	250
28, 30, 32	1 1/4	1 5/8-12	1 5/8-12	50.8	27.4	52	60	43	41.0	712	**20 R6X-S**	**20 R6X-SS**	250	210
35, 38	1 1/2	1 7/8-12	1 7/8-12	57.0	33.3	59	66	47	47.7	1100	**24 R6X-S**	**24 R6X-SS**	170	170

Order codes shown are part of our current manufacturing programme.

Imperial and metric parts may vary in hexagon dimensions.

$\frac{\text{PN (bar)}}{10}$ = PN (MPa)

Do not create drawings from these dimensions, they are subject to change and ISO manufacturing allowances.

K

BBMTX Swivel nut female connector

Triple-Lok® 37° Flare fixed female end / Triple-Lok® 37° Flare female swivel end

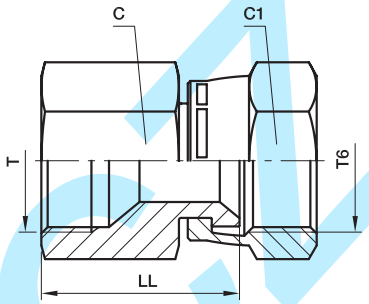

Tube O.D. mm	Tube O.D. in.	Thread UN/UNF-2A T	Thread UN/UNF-2B T6	C mm	C1 mm	LL mm	Weight (steel) g/1 piece	Triple-Lok® Steel	Triple-Lok® Stainless Steel	PN (bar) S	PN (bar) SS
6	1/4	7/16-20	7/16-20	14	14	23.0	25	**4BBMTXS**	**4BBMTXSS**	500	350
8	5/16	1/2-20	1/2-20	17	17	25.5	32	**5BBMTXS**	**5BBMTXSS**	420	350
10	3/8	9/16-18	9/16-18	19	19	25.5	60	**6BBMTXS**	**6BBMTXSS**	350	350
12	1/2	3/4-16	3/4-16	22	22	32.0	87	**8BBMTXS**	**8BBMTXSS**	350	350
14, 15,16	5/8	7/8-14	7/8-14	27	27	36.0	150	**10BBMTXS**	**10BBMTXSS**	350	350
18, 20	3/4	1 1/16-12	1 1/16-12	32	32	37.0	221	**12BBMTXS**	**12BBMTXSS**	350	350
25	1	1 5/16-12	1 5/16-12	41	38	42.0	348	**16BBMTXS**	**16BBMTXSS**	250	250
28, 30, 32	1 1/4	1 5/8-12	1 5/8-12	50	50	47.0	955	**20BBMTXS**	**20BBMTXSS**	250	210
35, 38	1 1/2	1 7/8-12	1 7/8-12	60	60	54.0	1031	**24BBMTXS**	**24BBMTXSS**	170	140

Order codes shown are part of our current manufacturing programme.

Imperial and metric parts may vary in hexagon dimensions.

$\frac{\text{PN (bar)}}{10}$ = PN (MPa)

Do not create drawings from these dimensions, they are subject to change and ISO manufacturing allowances.

kovaz.cz

TRMTX Tube end reducer

Triple-Lok® 37° Flare end / Triple-Lok® 37° Flare female swivel* end
SAE 070123 MS51534

*Form A Fixed Female Style

Form B*

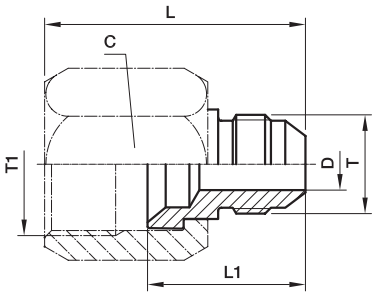

Form A

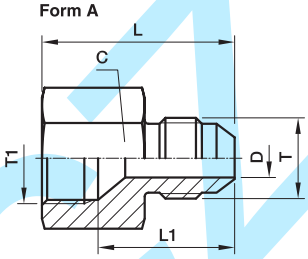

* For Form B, a BTX- or BMTX-nut is required (to be ordered separately)

Tube Metric T1 O.D.	Tube Metric T O.D.	Tube in. T1 O.D.	Tube in. T O.D.	Thread UN/UNF-2B T1	Thread UN/UNF-2A T	Typ	C mm	D mm	L mm	L1 mm	Weight (steel) g/1 piece	Triple-Lok® Steel	Triple-Lok® Stainless Steel	Triple-Lok® Brass	PN (bar) S	PN (bar) SS
		1/4	1/8	7/16-20	5/16-24	B	14.3	1.6	29.0	19.0	16	**4-2 TRTX-S**	**4-2TRMTXSS**		500	350
8	6	5/16	1/4	1/2-20	7/16-20	A	17.0	4.4	29.0	20.0	21	**5-4TRMTXS**	**5-4TRMTXSS**		420	350
10	6	3/8	1/4	9/16-18	7/16-20	B	19.0	4.4	36.0	24.5	35	**6-4TRTXS**	**6-4TRMTXSS**	**6-4 TRTX-B**	420	350
10	8	3/8	5/16	9/16-18	1/2-20	A	19.0	6.0	30.0	21.0	29	**6-5TRMTXS**	**6-5TRMTXSS**		420	350
12	6	1/2	1/4	3/4-16	7/16-20	B	22.0	4.4	38.0	25.5	38	**8-4TRTXS**	**8-4TRMTXSS**	**8-4 TRTX-B**	420	350
12	8	1/2	5/16	3/4-16	1/2-20	B	22.0	6.0	38.0	25.5	35	**8-5TRTXS**	**8-5TRMTXSS**		420	350
12	10	1/2	3/8	3/4-16	9/16-18	B	22.0	7.5	38.0	25.5	32	**8-6TRTXS**	**8-6TRMTXSS**	**8-6 TRTX-B**	420	350
14, 15, 16	6	5/8	1/4	7/8-14	7/16-20	B	27.0	4.4	41.0	26.0	83	**10-4 TRTX-S**	**10-4TRMTXSS**		350	350
14, 15, 16	8	5/8	5/16	7/8-14	1/2-20	B	27.0	6.0	41.0	26.0	80	**10-5TRTXS**	**10-5TRMTXSS**		350	350
14, 15, 16	10	5/8	3/8	7/8-14	9/16-18	B	27.0	7.5	41.0	26.0	78	**10-6 TRTX-S**	**10-6TRMTXSS**	**10-6 TRTX-B**	350	350
14, 15, 16	12	5/8	1/2	7/8-14	3/4-16	A	27.0	9.9	36.5	24.5	73	**10-8TRMTXS**	**10-8TRMTXSS**		350	350
18, 20	6	3/4	1/4	1 1/16-12	7/16-20	B	31.8	4.4	42.5	27.5	120	**12-4 TRTX-S**	**12-4TRMTXSS**	**12-4 TRTX-B**	350	350
18, 20	8	3/4	5/16	1 1/16-12	1/2-20	B	32.0	6.0	42.5	27.5	118	**12-5TRTXS**	**12-5TRMTXSS**		350	350
18, 20	10	3/4	3/8	1 1/16-12	9/16-18	B	31.8	7.5	43.0	27.5	115	**12-6 TRTX-S**	**12-6TRMTXSS**	**12-6 TRTX-B**	350	350
18, 20	12	3/4	1/2	1 1/16-12	3/4-16	B	32.0	9.9	45.0	30.0	128	**12-8TRTXS**	**12-8TRMTXSS**	**12-8 TRTX-B**	350	350
18, 20	14, 15, 16	3/4	5/8	1 1/16-12	7/8-14	A	32.0	12.3	42.0	29.5	119	**12-10TRMTXS**	**12-10TRMTXSS**		350	350
22	10	7/8	3/8	1 3/16-12	9/16-18	B	35.0	7.5	45.0	29.0	102	**14-6 TRTX-S**	**14-6TRMTXSS**		350	350
22	14, 15,16	7/8	5/8	1 3/16-12	7/8-14	B	35.0	12.3	50.0	34.0	120	**14-10 TRTX-S**	**14-10TRMTXSS**		350	350
22	18, 20	7/8	3/4	1 3/16-12	1 1/16-12	A	35.0	15.5	46.5	33.0	166	**14-12 TRTX-S**	**14-12TRMTXSS**		350	350
25	6	1	1/4	1 5/16-12	7/16-20	B	38.0	4.4	46.5	31.0	205	**16-4 TRTX-S**	**16-4TRMTXSS**		310	350
25	10	1	3/8	1 5/16-12	9/16-18	B	41.0	7.5	46.5	29.5	215	**16-6TRTXS**	**16-6TRMTXSS**		310	350
25	12	1	1/2	1 5/16-12	3/4-16	B	38.0	9.9	49.0	32.0	228	**16-8 TRTX-S**	**16-8TRMTXSS**		310	350
25	14, 15, 16	1	5/8	1 5/16-12	7/8-14	B	41.0	12.3	52.0	34.5	239	**16-10TRTXS**	**16-10TRMTXSS**		310	350
25	18, 20	1	3/4	1 5/16-12	1 1/16-12	B	41.0	15.5	54.5	37.0	252	**16-12TRTXS**	**16-12TRMTXSS**		310	280
25	22	1	7/8	1 5/16-12	1 3/16-12	A	38.0	18.2	48.5	34.0	224	**16-14 TRTXN-S**	**16-14TRMTXSS**		310	280
28, 30, 32	12	1 1/4	1/2	1 5/8-12	3/4-16	B	50.0	9.9	54.0	36.0	380	**20-8TRTXS**	**20-8TRMTXSS**		310	280
28, 30, 32	14, 15, 16	1 1/4	5/8	1 5/8-12	7/8-14	B	50.0	12.3	56.0	38.0	380	**20-10TRTXS**	**20-10TRMTXSS**		280	280
28, 30, 32	18, 20	1 1/4	3/4	1 5/8-12	1 1/16-12	B	50.0	15.5	57.0	39.0	370	**20-12TRTXS**	**20-12TRMTXSS**		280	280
28, 30, 32	25	1 1/4	1	1 5/8-12	1 5/16-12	B	50.0	21.5	59.0	40.5	355	**20-16TRTXS**	**20-16TRMTXSS**		280	280
35, 38	20	1 1/2	3/4	1 7/8-12	1 1/16-12	B	60.0	15.5	63.0	41.5	520	**24-12TRTXS**	**24-12TRMTXSS**		210	280
35, 38	25	1 1/2	1	1 7/8-12	1 5/16-12	B	57.0	21.5	63.0	41.5	570	**24-16 TRTX-S**	**24-16TRMTXSS**		210	140
35, 38	28, 30, 32	1 1/2	1 1/4	1 7/8-12	1 5/8-12	B	57.0	27.4	64.0	43.0	614	**24-20 TRTX-S**	**24-20TRMTXSS**		210	140
42	35, 38			2 1/4-12	1 7/8-12	B	65.0	33.3	72.0	48.5	839	**28-24TRTXS**	**28-24TRMTXSS**		140	140
50	38	2	1 1/2	2 1/2-12	1 7/8-12	B	73.0	33.3	75.0	48.5	900	**32-24 TRTX-S**			140	—

Order codes shown are part of our current manufacturing programme.

Imperial and metric parts may vary in hexagon dimensions.

$\frac{\text{PN (bar)}}{10} = \text{PN (MPa)}$

Pressure ratings – PN shown, apply to Steel and Stainless Steel versions of the product.

For Brass parts reduce pressures by 35 %

Do not create drawings from these dimensions, they are subject to change and ISO manufacturing allowances.

HMX6 Swivel nut union

Triple-Lok® 37° Flare female swivel ends

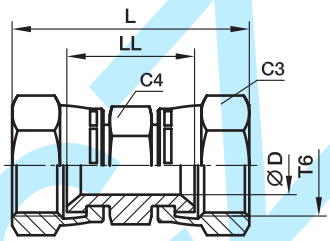

Tube O.D. mm	Tube O.D. in.	Thread UN/UNF-2B T6	C3 mm	C4 mm	D mm	L mm	LL mm	Weight (steel) g/1 piece	Triple-Lok® Steel	Triple-Lok® Stainless Steel	PN (bar) S	PN (bar) SS
6	1/4	7/16-20	14.3	14.3	4.4	38	20	27	**4 HX6-S**	**4HMX6SS**	500	500
8, 10	5/16, 3/8	9/16-18	17.5	17.5	7.5	45	26	35	**6 HX6-S**	**6HMX6SS**	350	350
12	1/2	3/4-16	22.2	22.2	9.9	51	29	64	**8 HX6-S**	**8HMX6SS**	350	350
14, 15,16	5/8	7/8-14	25.4	25.4	12.3	58	32	115	**10 HX6-S**	**10HMX6SS**	350	350
18, 20	3/4	1 1/16-12	31.8	31.8	15.5	62	33	185	**12 HX6-S**	**12HMX6SS**	350	350
25	1	1 5/16-12	38.0	38.0	21.4	68	38	235	**16 HX6-S**	**16HMX6SS**	250	250

Order codes shown are part of our current manufacturing programme.

Imperial and metric parts may vary in hexagon dimensions.

$\frac{\text{PN (bar)}}{10}$ = PN (MPa)

Do not create drawings from these dimensions, they are subject to change and ISO manufacturing allowances.

Kovaz.cz

JX6 Swivel nut union tee

Triple-Lok® 37° Flare female swivel ends

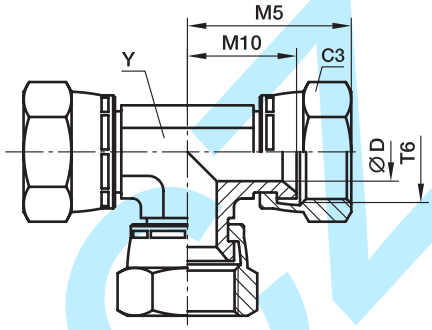

Tube O.D. mm	Tube O.D. in.	Thread UN/UNF-2B T6	C3 mm	D mm	M5 mm	M10 mm	Y mm	Weight (steel) g/1 piece	Triple-Lok® Steel	PN (bar)
6	1/4	7/16-20	14.3	4.4	26	17	11	55	**4 JX6-S**	500
8, 10	5/16, 3/8	9/16-18	17.5	7.5	32	22	14	85	**6 JX6-S**	350
12	1/2	3/4-16	22.2	9.9	35	24	19	150	**8 JX6-S**	350
14, 15,16	5/8	7/8-14	25.4	12.3	42	29	22	220	**10 JX6-S**	350
18, 20	3/4	1 1/16-12	31.8	15.5	42	30	27	345	**12 JX6-S**	350
25	1	1 5/16-12	38.0	21.4	52	36	30	510	**16 JX6-S**	250

Order codes shown are part of our current manufacturing programme.

Imperial and metric parts may vary in hexagon dimensions.

$\frac{\text{PN (bar)}}{10}$ = PN (MPa)

Do not create drawings from these dimensions, they are subject to change and ISO manufacturing allowances.

K

kovaz.cz

F87OMX Male stud connector

Triple-Lok® 37° Flare end / Male metric thread – O-ring (ISO 6149)

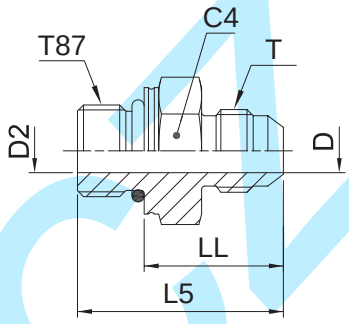

Tube O.D. mm	Tube O.D. in.	Thread Metric T87	Thread UN/UNF-2A T	C4 mm	D mm	D2 mm	L5 mm	LL mm	Weight (steel) g/1 piece	Triple-Lok® Steel	Triple-Lok® Stainless Steel	PN (bar) S	PN (bar) SS
6	1/4	M 10×1.0	7/16-20	14	4.4	4.4	30.0	21.5	25	**4M10F87OMXS**	**4M10F87OMXSS**	500	350
8	5/16	M 10×1.0	1/2-20	14	4.4	6.0	30.0	21.5	30	**5M10F87OMXS**	**5M10F87OMXSS**	420	350
8	5/16	M 12×1.5	1/2-20	19	6.0	6.0	33.0	22.0	37	**5M12F87OMXS**	**5M12F87OMXSS**	420	350
8	5/16	M 14×1.5	1/2-20	19	6.0	6.0	34.0	23.0	40	**5M14F87OMXS**	**5M14F87OMXSS**	420	350
10	3/8	M 14×1.5	9/16-18	19	7.5	7.5	34.0	23.0	44	**6M14F87OMXS**	**6M14F87OMXSS**	420	350
10	3/8	M 16×1.5	9/16-18	22	7.5	7.5	35.5	24.5	53	**6M16F87OMXS**	**6M16F87OMXSS**	420	350
10	3/8	M 18×1.5	9/16-18	24	7.5	7.5	36.5	24.0	60	**6M18F87OMXS**	**6M18F87OMXSS**	350	350
12	1/2	M 14×1.5	3/4-16	19	9.9	7.5	36.0	25.0	41	**8M14F87OMXS**	**8M14F87OMXSS**	420	350
12	1/2	M 16×1.5	3/4-16	22	9.9	9.0	38.0	26.5	57	**8M16F87OMXS**	**8M16F87OMXSS**	420	350
12	1/2	M 18×1.5	3/4-16	24	9.9	9.9	39.0	26.5	71	**8M18F87OMXS**	**8M18F87OMXSS**	350	350
14, 15,16	5/8	M 14×1.5	7/8-14	24	12.3	7.5	40.5	29.5	73	**10M14F87OMXS**	**10M14F87OMXSS**	350	350
14, 15,16	5/8	M 18×1.5	7/8-14	24	12.3	11.0	43.0	30.5	75	**10M18F87OMXS**	**10M18F87OMXSS**	350	350
14, 15,16	5/8	M 22×1.5	7/8-14	27	12.3	12.3	43.5	30.5	98	**10M22F87OMXS**	**10M22F87OMXSS**	350	350
14, 15,16	5/8	M 27×2.0	7/8-14	32	12.3	12.3	46.0	30.0	75	**10M27F87OMXS**	**10M27F87OMXSS**	350	350
18, 20	3/4	M 22×1.5	1 1/16-12	27	15.5	14.0	48.0	35.0	104	**12M22F87OMXS**	**12M22F87OMXSS**	350	350
18, 20	3/4	M 27×2.0	1 1/16-12	32	15.5	15.5	51.0	35.0	158	**12M27F87OMXS**	**12M27F87OMXSS**	350	350
25	1	M 27×2.0	1 5/16-12	36.	21.5	18.0	50.5	34.5	206	**16M27F87OMXS**	**16M27F87OMXSS**	280	280
25	1	M 33×2.0	1 5/16-12	41	21.5	21.5	53.0	37.0	273	**16M33F87OMXS**	**16M33F87OMXSS**	280	280
28, 30, 32	1 1/4	M 42×2.0	1 5/8-12	50	27.5	30.0	55.0	39.0	431	**20M42F87OMXS**	**20M42F87OMXSS**	280	210
35, 38	1 1/2	M 48×2.0	1 7/8-12	55	33.0	33.0	59.0	41.5	564	**24M48F87OMXS**	**24M48F87OMXSS**	210	140

Steel, stainless steel and brass Triple-Lok® parts are delivered with NBR elastomeric seals as standard. For more details on other seal materials see page K92.

Order codes shown are part of our current manufacturing programme.

Imperial and metric parts may vary in hexagon dimensions.

$\frac{\text{PN (bar)}}{10}$ = PN (MPa)

Do not create drawings from these dimensions, they are subject to change and ISO manufacturing allowances.

F5OMX Male stud connector

Triple-Lok® 37° Flare end / Male UN/UNF thread – O-ring (ISO 11926)
SAE 070120 MS51525

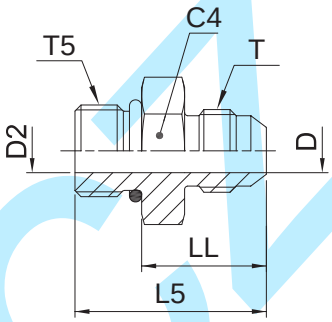

Tube O.D. mm	Tube O.D. in.	Thread UN/UNF-2A T5	Thread UN/UNF-2A T	C4 mm	D mm	D2 mm	L5 mm	LL mm	Weight (steel) g/1 piece	Triple-Lok® Steel	Triple-Lok® Stainless Steel	PN (bar) S	PN (bar) SS
	1/8	5/16-24	5/16-24	11.0	1.6	1.6	27.0	19.0	8	**2 F5OX-S**		500	—
	3/16	3/8-24	3/8-24	13.0	3.0	3.0	28.0	20.0	10	**3 F5OX-S**		500	—
	3/16	5/16-24	3/8-24	13.0	3.0	1.6	28.0	20.0	9	**3-2 F5OX-S**		500	—
6	1/4	7/16-20	7/16-20	14.3	4.4	4.4	31.0	22.0	15	**4F5OMXS**	**4F5OMXSS**	500	350
6	1/4	3/8-24	7/16-20	14.3	4.4	3.0	30.0	23.0	12		**4-3F5OMXSS**	500	350
6	1/4	1/2-20	7/16-20	16.0	4.4	4.4	31.0	22.0	25	**4-5 F5OX-S**	**4-5F5OMXSS**	420	350
6	1/4	9/16-18	7/16-20	17.0	4.4	4.4	33.0	23.0	27	**4-6F5OMXS**	**4-6F5OMXSS**	420	350
6	1/4	3/4-16	7/16-20	22.3	4.4	4.4	35.0	24.0	35	**4-8 F5OX-S**	**4-8F5OMXSS**	420	350
6	1/4	7/8-14	7/16-20	25.5	4.4	4.4	38.0	25.0	60	**4-10 F5OX-S**	**4-10F5OMXSS**	350	350
8	5/16	1/2-20	1/2-20	17.0	6.0	6.0	31.0	22.0	18	**5F5OMXS**	**5F5OMXSS**	420	350
8	5/16	7/16-20	1/2-20	14.0	6.0	4.5	31.0	22.0	18	**5-4F5OMXS**	**5-4F5OMXSS**	420	350
8	5/16	9/16-18	1/2-20	17.5	6.0	6.0	33.0	23.0	25	**5-6 F5OX-S**	**5-6F5OMXSS**	420	350
8	5/16	3/4-16	1/2-20	22.2	6.0	6.0	35.0	24.0	40	**5-8 F5OX-S**	**5-8F5OMXSS**	420	350
10	3/8	9/16-18	9/16-18	17.0	7.5	7.5	33.0	23.0	25	**6F5OMXS**	**6F5OMXSS**	420	350
10	3/8	7/16-20	9/16-18	16.0	7.5	4.4	32.0	23.0	40	**6-4 F5OX-S**	**6-4F5OMXSS**	420	350
10	3/8	1/2-20	9/16-18	16.0	7.5	6.0	32.0	23.0	56	**6-5 F5OX-S**	**6-5F5OMXSS**	420	350
10	3/8	3/4-16	9/16-18	22.0	7.5	7.5	35.0	24.0	44	**6-8F5OMXS**	**6-8F5OMXSS**	420	350
10	3/8	7/8-14	9/16-18	27.0	7.5	7.5	38.0	25.0	85	**6-10F5OMXS**	**6-10F5OMXSS**	350	350
10	3/8	1 1/16-12	9/16-18	31.8	7.5	15.5	42.0	27.0	100	**6-12 F5OX-S**	**6-12F5OMXSS**	350	350
12	1/2	3/4-16	3/4-16	22.0	9.9	9.9	38.0	27.0	58	**8F5OMXS**	**8F5OMXSS**	420	350
12	1/2	7/16-20	3/4-16	20.5	9.9	4.4	38.0	29.0	40	**8-4 F5OX-S**	**8-4F5OMXSS**	420	350
12	1/2	9/16-18	3/4-16	19.0	9.9	7.5	36.5	26.5	44	**8-6F5OMXS**	**8-6F5OMXSS**	420	350
12	1/2	7/8-14	3/4-16	27.0	9.9	9.9	41.0	28.0	73	**8-10F5OMXS**	**8-10F5OMXSS**	350	350
12	1/2	1 1/16-12	3/4-16	32.0	9.9	9.9	45.0	30.0	126	**8-12F5OMXS**	**8-12F5OMXSS**	350	350
12	1/2	1 5/16-12	3/4-16	38.0	9.9	9.9	45.0	30.0	160	**8-16 F5OX-S**	**8-16F5OMXSS**	310	310
14, 15,16	5/8	7/8-14	7/8-14	27.0	12.3	12.3	43.0	30.5	75	**10F5OMXS**	**10F5OMXSS**	350	350
14, 15,16	5/8	9/16-18	7/8-14	23.8	12.3	7.5	43.0	33.0	60	**10-6 F5OX-S**	**10-6F5OMXSS**	350	350
14, 15,16	5/8	3/4-16	7/8-14	24.0	12.3	9.9	42.0	30.5	65	**10-8F5OMXS**	**10-8F5OMXSS**	350	350
14, 15,16	5/8	1 1/16-12	7/8-14	32.0	12.3	12.3	47.0	32.0	132	**10-12F5OMXS**	**10-12F5OMXSS**	350	350
14, 15,16	5/8	1 5/16-12	7/8-14	38.0	12.3	12.3	48.0	33.0	170	**10-16 F5OX-S**	**10-16F5OMXSS**	310	310
18, 20	3/4	1 1/16-12	1 1/16-12	32.0	15.5	15.5	50.0	35.0	134	**12F5OMXS**	**12F5OMXSS**	350	350
18, 20	3/4	3/4-16	1 1/16-12	28.6	15.5	9.9	49.0	38.0	104	**12-8 F5OX-S**	**12-8F5OMXSS**	350	350
18, 20	3/4	7/8-14	1 1/16-12	27.0	15.5	12.3	48.0	35.0	108	**12-10F5OMXS**	**12-10F5OMXSS**	350	350
18, 20	3/4	1 3/16-12	1 1/16-12	35.0	15.5	15.5	50.0	35.0	170	**12-14 F5OX-S**	**12-14F5OMXSS**	310	310
18, 20	3/4	1 5/16-12	1 1/16-12	38.0	15.5	21.5	50.5	35.5	197	**12-16 F5OX-S**	**12-16F5OMXSS**	310	310
18, 20	3/4	1 5/8-12	1 1/16-12	47.6	15.5	15.5	53.0	38.0	230	**12-20 F5OX-S**	**12-20F5OMXSS**	280	280
22	7/8	1 3/16-12	1 3/16-12	35.0	18.2	18.2	51.0	36.0	174	**14 F5OX-S**	**14F5OMXSS**	280	280
22	7/8	1 5/16-12	1 3/16-12	38.0	18.2	18.2	51.0	36.0	223	**14-16 F5OX-S**	**14-16F5OMXSS**	280	280
25	1	1 5/16-12	1 5/16-12	41.0	21.5	21.5	52.0	36.5	203	**16F5OMXS**	**16F5OMXSS**	280	280
25	1	3/4-16	1 5/16-12	35.0	21.4	9.9	45.0	34.0	160	**16-8 F5OX-S**	**16-8F5OMXSS**	280	280

Continued on page K28

F5OMX Male stud connector

Triple-Lok® 37° Flare end / Male UN/UNF thread – O-ring (ISO 11926)
SAE 070120 MS51525

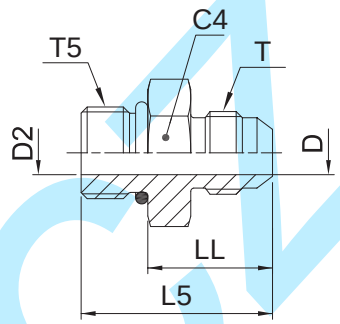

Tube O.D. mm	Tube O.D. in.	Thread UN/UNF-2A T5	Thread UN/UNF-2A T	C4 mm	D mm	D2 mm	L5 mm	LL mm	Weight (steel) g/1 piece	Triple-Lok® Steel	Triple-Lok® Stainless Steel	PN (bar) S	PN (bar) SS
25	1	7/8-14	1 5/16-12	35.0	21.4	12.3	53	40.0	183	**16-10 F5OX-S**	**16-10F5OMXSS**	280	280
25	1	1 1/16-12	1 5/16-12	36.0	21.4	15.5	52	36.5	204	**16-12F5OMXS**	**16-12F5OMXSS**	280	280
25	1	1 3/16-12	1 5/16-12	35.0	21.4	18.3	52	37.0	198	**16-14 F5OX-S**	**16-14F5OMXSS**	280	280
25	1	1 5/8-12	1 5/16-12	47.6	21.4	21.4	54	39.0	270	**16-20 F5OX-S**	**16-20F5OMXSS**	280	280
25	1	1 7/8-12	1 5/16-12	54.0	21.4	21.4	56	41.0	310	**16-24 F5OX-S**	**16-24F5OMXSS**	210	210
28, 30, 32	1 1/4	1 5/8-12	1 5/8-12	50.0	27.5	27.5	55	40.0	274	**20F5OMXS**	**20F5OMXSS**	280	210
28, 30, 32	1 1/4	1 1/16-12	1 5/8-12	43.0	27.4	15.5	58	43.0	250	**20-12 F5OX-S**	**20-12F5OMXSS**	280	210
28, 30, 32	1 1/4	1 5/16-12	1 5/8-12	43.0	27.4	21.4	59	44.0	280	**20-16 F5OX-S**	**20-16F5OMXSS**	280	210
28, 30, 32	1 1/4	1 7/8-12	1 5/16-12	54.0	27.4	27.4	57	42.0	454	**20-24 F5OX-S**		280	210
35, 38	1 1/2	1 7/8-12	1 7/8-12	55.0	33.0	33.0	60	45.0	355	**24F5OMXS**	**24F5OMXSS**	210	140
35, 38	1 1/2	1 5/8-12	1 7/8-12	51.0	33.3	27.4	64	49.0	340	**24-20 F5OX-S**	**24-20F5OMXSS**	210	140
35, 38	1 1/2	2 1/2-12	1 7/8-12	70.0	33.3	33.3	64	49.0	400	**24-32 F5OX-S**		140	—
	2	2 1/2-12	2 1/2-12	70.0	45.2	45.2	71	56.0	650	**32 F5OX-S**		140	—
	2	1 7/8-12	2 1/2-12	66.7	45.2	33.3	75	60.0	600	**32-24 F5OX-S**		140	—

Steel, stainless steel and brass Triple-Lok® parts are delivered with NBR elastomeric seals as standard. For more details on other seal materials see page K92.

Order codes shown are part of our current manufacturing programme.

Imperial and metric parts may vary in hexagon dimensions.

$\frac{\text{PN (bar)}}{10} = \text{PN (MPa)}$

Do not create drawings from these dimensions, they are subject to change and ISO manufacturing allowances.

Kovaco

FF5OMX Extended male stud connector

Triple-Lok® 37° Flare end / Male UN/UNF thread – O-ring (ISO 11926)
SAE 070122 MS51526

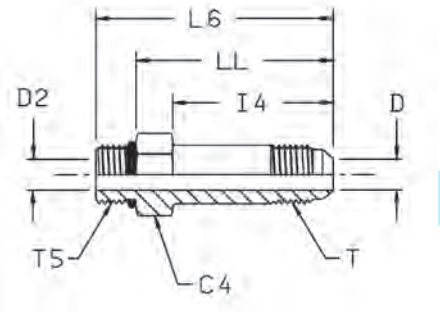

Tube O.D. mm	Tube O.D. in.	Thread UN/UNF-2A T5	Thread UN/UNF-2A T	C4 mm	D mm	D2 mm	I4 mm	L6 mm	LL mm	Weight (steel) g/1 piece	Triple-Lok® Steel	Triple-Lok® Stainless Steel	PN (bar) S	PN (bar) SS
6	1/4	7/16-20	7/16-20	14.3	4.4	4.4	35	53	44	33	**4 FF50X-S**	**4 FF50X-SS**	500	500
10	3/8	9/16-18	9/16-18	17.5	7.5	7.5	40	59	49	53	**6 FF50X-S**	**6 FF50X-SS**	420	420
12	1/2	3/4-16	3/4-16	22.2	9.9	9.9	48	69	58	104	**8 FF50X-S**	**8 FF50X-SS**	420	420
14, 15,16	5/8	7/8-14	7/8-14	25.4	12.3	12.3	53	77	64	151	**10 FF50X-S**	**10 FF50X-SS**	350	350
18, 20	3/4	1 1/16-12	1 1/16-12	31.8	15.5	15.5	64	92	77	277	**12 FF50X-S**	**12 FF50X-SS**	350	350
25	1	1 5/16-12	1 5/16-12	38.0	21.4	21.4	72	101	86	458	**16 FF50X-S**	**16 FF50X-SS**	280	280
28, 30, 32	1 1/4	1 5/8-12	1 5/8-12	47.6	27.4	27.4	88	119	104	862	**20 FF50X-S**	**20 FF50X-SS**	280	280

Steel, stainless steel and brass Triple-Lok® parts are delivered with NBR elastomeric seals as standard. For more details on other seal materials see page K92.

Order codes shown are part of our current manufacturing programme.

Imperial and metric parts may vary in hexagon dimensions.

$\frac{\text{PN (bar)}}{10} = \text{PN (MPa)}$

Do not create drawings from these dimensions, they are subject to change and ISO manufacturing allowances.

K

Kovaz

F42EDMX Male stud connector

Triple-Lok® 37° Flare end / Male BSPP thread – ED seal (ISO 1179)

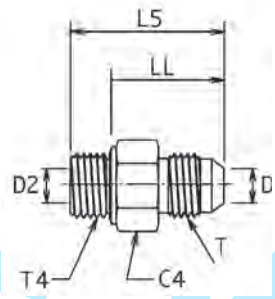

Tube O.D. mm	Tube O.D. in.	Thread BSPP T4	Thread UN/UNF-2A T	C4 mm	D mm	D2 mm	L5 mm	LL mm	Weight (steel) g/1 piece	Triple-Lok® Steel	Triple-Lok® Stainless Steel	PN (bar) S	PN (bar) SS
6	1/4	1/8-28	7/16-20	14	4.4	4.4	30.0	22.0	20	**4F42EDMXS**	**4F42EDMXSS**	500	350
6	1/4	1/4-19	7/16-20	19	4.4	4.4	35.0	23.0	34	**4-4F42EDMXS**	**4-4F42EDMXSS**	420	350
6	1/4	3/8-19	7/16-20	22	4.4	9.0	36.0	24.0	47	**4-6F42EDMXS**	**4-6F42EDMXSS**	420	350
6	1/4	1/2-14	7/16-20	27	4.4	14.0	39.5	25.5	99	**4-8F42EDMXS**	**4-8F42EDMXSS**	350	350
6	1/4	3/4-14	7/16-20	32	4.4	16.0	43.0	27.0	88	**4-12F42EDMXS**	**4-12F42EDMXSS**	350	350
8	5/16	1/8-28	1/2-20	14	6.0	4.0	30.0	22.0	20	**5F42EDMXS**	**5F42EDMXSS**	420	350
8	5/16	1/4-19	1/2-20	19	6.0	6.0	35.0	23.0	30	**5-4F42EDMXS**	**5-4F42EDMXSS**	420	350
8	5/16	3/8-19	1/2-20	22	6.0	9.0	36.0	24.0	47	**5-6F42EDMXS**	**5-6F42EDMXSS**	420	350
10	3/8	1/4-19	9/16-18	19	7.5	6.0	35.0	23.0	28	**6F42EDMXS**	**6F42EDMXSS**	420	350
10	3/8	1/8-28	9/16-18	17	7.5	4.0	31.0	23.0	27	**6-2F42EDMXS**	**6-2F42EDMXSS**	420	350
10	3/8	3/8-19	9/16-18	22	7.5	7.5	36.0	24.0	40	**6-6F42EDMXS**	**6-6F42EDMXSS**	420	350
10	3/8	1/2-14	9/16-18	27	7.5	14.0	39.5	25.5	95	**6-8F42EDMXS**	**6-8F42EDMXSS**	350	350
10	3/8	3/4-14	9/16-18	32	7.5	16.0	45.5	29.5	100	**6-12F42EDMXS**	**6-12F42EDMXSS**	350	350
12	1/2	3/8-19	3/4-16	22	9.9	9.0	38.5	26.5	50	**8F42EDMXS**	**8F42EDMXSS**	420	350
12	1/2	1/4-19	3/4-16	19	9.9	6.0	39.0	27.0	40	**8-4F42EDMXS**	**8-4F42EDMXSS**	420	350
12	1/2	1/2-14	3/4-16	27	9.9	9.9	42.0	28.0	100	**8-8F42EDMXS**	**8-8F42EDMXSS**	350	350
12	1/2	3/4-14	3/4-16	32	9.9	16.0	46.0	30.0	100	**8-12F42EDMXS**	**8-12F42EDMXSS**	350	350
12	1/2	1-11	3/4-16	41	9.9	23.0	53.0	35.0	150	**8-16F42EDMXS**	**8-16F42EDMXSS**	280	280
14, 15, 16	5/8	1/2-14	7/8-14	27	12.3	12.3	45.0	31.0	103	**10F42EDMXS**	**10F42EDMXSS**	350	350
14, 15, 16	5/8	1/4-19	7/8-14	24	12.3	6.0	41.0	29.0	110	**10-4F42EDMXS**	**10-4F42EDMXSS**	350	350
14, 15, 16	5/8	3/8-19	7/8-14	24	12.3	9.0	43.0	31.0	65	**10-6F42EDMXS**	**10-6F42EDMXSS**	350	350
14, 15, 16	5/8	3/4-14	7/8-14	32	12.3	16.0	48.0	32.0	160	**10-12F42EDMXS**	**10-12F42EDMXSS**	350	350
14, 15, 16	5/8	1-11	7/8-14	41	12.3	23.0	51.0	33.0	205	**10-16F42EDMXS**	**10-16F42EDMXSS**	280	280
18, 20	3/4	3/4-14	1 1/16-12	32	15.5	15.5	51.0	35.0	165	**12F42EDMXS**	**12F42EDMXSS**	350	350
18, 20	3/4	3/8-19	1 1/16-12	27	15.5	9.0	50.0	38.0	105	**12-6F42EDMXS**	**12-6F42EDMXSS**	350	350
18, 20	3/4	1/2-14	1 1/16-12	27	15.5	14.0	49.0	35.0	118	**12-8F42EDMXS**	**12-8F42EDMXSS**	350	350
18, 20	3/4	1-11	1 1/16-12	41	15.5	23.0	53.5	34.5	292	**12-16F42EDMXS**	**12-16F42EDMXSS**	280	280
18, 20	3/4	1 1/4-11	1 1/16-12	50	15.5	30.0	62.0	42.0	220	**12-20F42EDMXS**	**12-20F42EDMXSS**	280	210
22	7/8	3/4-14	1 3/16-12	32	18.0	18.0	51.0	35.0	173	**14F42EDMXS**	**14F42EDMXSS**	280	280
25	1	1-11	1 5/16-12	41	21.5	21.5	55.0	37.0	262	**16F42EDMXS**	**16F42EDMXSS**	280	280
25	1	1/2-14	1 5/16-12	36	21.5	14.0	54.0	40.0	145	**16-8F42EDMXS**	**16-8F42EDMXSS**	280	280
25	1	3/4-14	1 5/16-12	36	21.5	16.0	53.0	37.0	217	**16-12F42EDMXS**	**16-12F42EDMXSS**	280	280
25	1	1 1/4-11	1 5/16-12	50	21.5	25.0	59.0	39.0	386	**16-20F42EDMXS**	**16-20F42EDMXSS**	280	280
28, 30, 32	1 1/4	1 1/4-11	1 5/8-12	50	27.5	25.0	60.0	40.0	375	**20F42EDMXS**	**20F42EDMXSS**	280	210
28, 30, 32	1 1/4	3/4-14	1 5/8-12	46	27.5	16.0	59.5	43.5	220	**20-12F42EDMXS**	**20-12F42EDMXSS**	280	210
28, 30, 32	1 1/4	1-11	1 5/8-12	46	27.5	23.0	62.0	44.0	255	**20-16F42EDMXS**	**20-16F42EDMXSS**	280	210
28, 30, 32	1 1/4	1 1/2-11	1 5/8-12	55	27.5	32.0	64.0	42.0	420	**20-24F42EDMXS**	**20-24F42EDMXSS**	210	140
35, 38	1 1/2	1 1/2-11	1 7/8-12	55	33.0	32.0	67.0	45.0	480	**24F42EDMXS**	**24F42EDMXSS**	210	140
35, 38	1 1/2	1-11	1 7/8-12	50	33.0	23.0	63.0	45.0	390	**24-16F42EDMXS**	**24-16F42EDMXSS**	210	210
35, 38	1 1/2	1 1/4-11	1 7/8-12	50	33.0	30.0	62.0	42.0	420	**24-20F42EDMXS**	**24-20F42EDMXSS**	210	210
42		1 1/2-11	2 1/4-12	60	39.0	36.0	71.0	49.0	746	**28-24F42EDMXS**	**28-24F42EDMXSS**	140	105

Steel, stainless steel and brass Triple-Lok® parts are delivered with NBR elastomeric seals as standard. For more details on other seal materials see page K92.

Order codes shown are part of our current manufacturing programme. Imperial and metric parts may vary in hexagon dimensions.

$\frac{\text{PN (bar)}}{10} = \text{PN (MPa)}$

Do not create drawings from these dimensions, they are subject to change and ISO manufacturing allowances.

FF42EDMX Extended male stud connector

Triple-Lok® 37° Flare end / Male BSPP thread - ED seal (ISO 1179-2)
SAE 070122

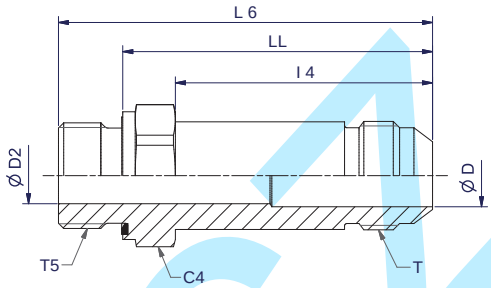

Tube O.D. mm	Tube O.D. inch	Thread UN/UNF-2A T	Thread BSPP T5	C4 mm	D mm	D2 mm	I4 mm	L6 mm	LL mm	Weight (steel) g/1 piece	Triple-Lok® Steel	Triple-Lok® Stainless Steel	PN (bar) S	PN (bar) SS
10	3/8	9/16-18	1/4-19	19	8	6	40	61	49	**60**	**6FF42EDMXS**	**6FF42EDMXSS**	420	350
12	1/2	3/4-16	3/8-19	22	10	9	48	70	58	**100**	**8FF42EDMXS**	**8FF42EDMXSS**	420	350
14, 15, 16	5/8	7/8-14	1/2-14	27	12	12	53	79	65	**170**	**10FF42EDMXS**	**10FF42EDMXSS**	350	350
18, 20	3/4	1 1/16-12	3/4-14	32	16	16	64	93	77	**280**	**12FF42EDMXS**	**12FF42EDMXSS**	350	350

Steel, stainless steel and brass Triple-Lok® parts are delivered with NBR elastomeric seals as standard. For more details on other materials see page K92.

Order codes shown are part of our current manufacturing programme.

Imperial and metric parts may vary in hexagon dimensions.

$\frac{\text{PN (bar)}}{10}$ = PN (MPa)

Do not create drawings from these dimensions, they are subject to change and ISO manufacturing allowances.

K

kovaz.cz

F4OMX Male stud connector

Triple-Lok® 37° Flare end / Male BSPP thread – O-ring + retaining ring (ISO 1179)

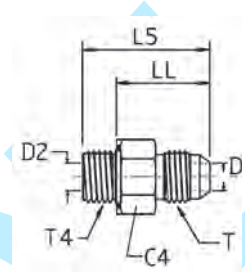

Tube O.D. mm	Tube O.D. in.	Thread BSPP T4	Thread UN/UNF-2A T	C4 mm	D mm	D2 mm	L5 mm	LL mm	Weight (steel) g/1 piece	Triple-Lok® Steel	Triple-Lok® Stainless Steel	PN (bar) S	PN (bar) SS
6	1/4	1/8-28	7/16-20	17	4.4	4.4	28.0	21.0	20	**4F4OMXS**	**4F4OMXSS**	350	350
6	1/4	1/4-19	7/16-20	19	4.4	4.4	32.0	21.0	34	**4-4F4OMXS**	**4-4F4OMXSS**	350	350
6	1/4	3/8-19	7/16-20	22	4.4	4.4	33.0	22.0	47	**4-6F4OMXS**	**4-6F4OMXSS**	350	350
6	1/4	1/2-14	7/16-20	30	4.4	4.4	39.0	24.0	99	**4-8F4OMXS**	**4-8F4OMXSS**	350	350
8	5/16	1/8-28	1/2-20	17	6.0	4.4	28.0	21.0	25	**5F4OMXS**	**5F4OMXSS**	350	350
8	5/16	1/4-19	1/2-20	19	6.0	6.0	32.0	21.0	30	**5-4F4OMXS**	**5-4F4OMXSS**	350	350
8	5/16	3/8-19	1/2-20	22	6.0	6.0	33.0	22.0	47	**5-6F4OMXS**	**5-6F4OMXSS**	350	350
10	3/8	1/4-19	9/16-18	19	7.5	6.0	32.5	21.0	28	**6F4OMXS**	**6F4OMXSS**	350	350
10	3/8	1/8-28	9/16-18	17	7.5	4.4	29.0	22.0	27	**6-2F4OMXS**	**6-2F4OMXSS**	350	350
10	3/8	3/8-19	9/16-18	22	7.5	7.5	33.0	22.0	40	**6-6F4OMXS**	**6-6F4OMXSS**	350	350
10	3/8	1/2-14	9/16-18	30	7.5	7.5	38.0	23.5	25	**6-8F4OMXS**	**6-8F4OMXSS**	350	350
10	3/8	3/4-14	9/16-18	36	7.5	7.5	39.5	25.0	100	**6-12F4OMXS**	**6-12F4OMXSS**	280	280
12	1/2	3/8-19	3/4-16	22	9.9	9.9	36.0	25.0	50	**8F4OMXS**	**8F4OMXSS**	350	350
12	1/2	1/4-19	3/4-16	19	9.9	6.0	41.0	24.0	40	**8-4F4OMXS**	**8-4F4OMXSS**	350	350
12	1/2	1/2-14	3/4-16	30	9.9	9.9	41.0	27.0	100	**8-8F4OMXS**	**8-8F4OMXSS**	350	350
12	1/2	3/4-14	3/4-16	36	9.9	9.9	42.0	28.5	100	**8-12F4OMXS**	**8-12F4OMXSS**	280	250
12	1/2	1-11	3/4-16	46	9.9	9.9	47.0	29.0	150	**8-16F4OMXS**	**8-16F4OMXSS**	280	250
14, 15, 16	5/8	1/2-14	7/8-14	30	12.3	12.3	43.0	28.5	103	**10F4OMXS**	**10F4OMXSS**	350	350
14, 15, 16	5/8	1/4-19	7/8-14	24	12.3	6.0	39.0	28.0	110	**10-4F4OMXS**	**10-4F4OMXSS**	350	350
14, 15, 16	5/8	3/8-19	7/8-14	24	12.3	9.0	39.0	28.0	65	**10-6F4OMXS**	**10-6F4OMXSS**	350	350
14, 15, 16	5/8	3/4-14	7/8-14	36	12.3	12.3	45.0	30.5	160	**10-12F4OMXS**	**10-12F4OMXSS**	280	250
18, 20	3/4	3/4-14	1 1/16-12	36	15.5	15.5	47.5	33.0	165	**12F4OMXS**	**12F4OMXSS**	280	250
18, 20	3/4	3/8-19	1 1/16-12	27	15.5	9.0	44.0	34.0	97	**12-6F4OMXS**	**12-6F4OMXSS**	350	250
18, 20	3/4	1/2-14	1 1/16-12	30	15.5	12.0	47.0	32.0	118	**12-8F4OMXS**	**12-8F4OMXSS**	350	350
18, 20	3/4	1-11	1 1/16-12	46	15.5	15.5	52.5	34.0	292	**12-16F4OMXS**	**12-16F4OMXSS**	280	250
18, 20	3/4	1 1/4-11	1 1/16-12	50	15.5	15.5	53.0	34.5	220	**12-20F4OMXS**	**12-20F4OMXSS**	250	175
25	1	1-11	1 5/16-12	46	21.5	21.5	53.5	35.0	262	**16F4OMXS**	**16F4OMXSS**	280	250
25	1	1/2-14	1 5/16-12	36	21.5	12.0	48.5	34.0	145	**16-8F4OMXS**	**16-8F4OMXSS**	280	250
25	1	3/4-14	1 5/16-12	36	21.5	15.5	48.5	34.0	173	**16-12F4OMXS**	**16-12F4OMXSS**	280	250
25	1	1 1/4-11	1 5/16-12	50	27.5	27.5	56.0	37.5	386	**16-20F4OMXS**	**16-20F4OMXSS**	250	175
28, 30, 32	1 1/4	1 1/4-11	1 5/8-12	50	27.5	27.5	56.0	37.5	325	**20F4OMXS**	**20F4OMXSS**	250	175
28, 30, 32	1 1/4	3/4-14	1 5/8-12	46	27.5	15.5	51.0	36.5	220	**20-12F4OMXS**	**20-12F4OMXSS**	280	175
28, 30, 32	1 1/4	1-11	1 5/8-12	46	27.5	15.5	51.0	37.0	330	**20-16F4OMXS**	**20-16F4OMXSS**	280	210
28, 30, 32	1 1/4	1 1/2-11	1 5/8-12	55	27.5	27.5	57.0	38.5	480	**20-24F4OMXS**	**20-24F4OMXSS**	210	140
35, 38	1 1/2	1 1/2-11	1 7/8-12	55	33.0	33.0	61.0	42.5	480	**24F4OMXS**	**24F4OMXSS**	210	140
35, 38	1 1/2	1 1/4-11	1 7/8-12	50	33.0	27.5	60.5	42.0	420	**24-20F4OMXS**	**24-20F4OMXSS**	210	140
42		1 1/2-11	2 1/4	60	39.0	33.0	67.5	49.0	740	**28-24F4OMXS**	**28-24F4OMXSS**	140	105

Steel, stainless steel and brass Triple-Lok® parts are delivered with NBR elastomeric seals as standard. For more details on other seal materials see page K92.

Order codes shown are part of our current manufacturing programme.

Imperial and metric parts may vary in hexagon dimensions.

$$\frac{\text{PN (bar)}}{10} = \text{PN (MPa)}$$

Do not create drawings from these dimensions, they are subject to change and ISO manufacturing allowances.

F82EDMX Male stud connector

Triple-Lok® 37° Flare end / Male metric thread – ED seal (ISO 9974)

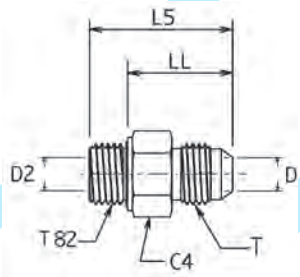

Tube O.D. mm	Tube O.D. in.	Thread Metric T82	Thread UN/UNF-2A T	C4 mm	D mm	D2 mm	L5 mm	LL mm	Weight (steel) g/1 piece	Triple-Lok® Steel	Triple-Lok® Stainless Steel	PN (bar) S	PN (bar) SS
6	1/4	M 10×1.0	7/16-20	14	4.4	4	30.0	22.0	19	**4M10F82EDMXS**	**4M10F82EDMXSS**	500	350
6	1/4	M 12×1.5	7/16-20	17	4.4	6	34.0	22.0	30	**4M12F82EDMXS**	**4M12F82EDMXSS**	420	350
8	5/16	M 10×1.0	1/2-20	14	6.0	4	30.0	22.0	17	**5M10F82EDMXS**	**5M10F82EDMXSS**	420	350
8	5/16	M 12×1.5	1/2-20	17	6.0	6	34.0	22.0	28	**5M12F82EDMXS**	**5M12F82EDMXSS**	420	350
8	5/16	M 14×1.5	1/2-20	19	6.0	7	35.0	23.0	35	**5M14F82EDMXS**	**5M14F82EDMXSS**	420	350
10	3/8	M 12×1.5	9/16-18	17	7.5	6	35.0	23.0	33	**6M12F82EDMXS**	**6M12F82EDMXSS**	420	350
10	3/8	M 14×1.5	9/16-18	19	7.5	7	35.0	23.0	38	**6M14F82EDMXS**	**6M14F82EDMXSS**	420	350
10	3/8	M 16×1.5	9/16-18	22	7.5	9	36.0	24.0	53	**6M16F82EDMXS**	**6M16F82EDMXSS**	420	350
10	3/8	M 18×1.5	9/16-18	24	7.5	11	36.0	24.0	60	**6M18F82EDMXS**	**6M18F82EDMXSS**	350	350
10	3/8	M 22×1.5	9/16-18	27	7.5	14	39.5	25.5	68	**6M22F82EDMXS**	**6M22F82EDMXSS**	350	350
12	1/2	M 14×1.5	3/4-16	19	9.9	7	38.5	26.5	41	**8M14F82EDMXS**	**8M14F82EDMXSS**	420	350
12	1/2	M 16×1.5	3/4-16	22	9.9	9	38.5	26.5	57	**8M16F82EDMXS**	**8M16F82EDMXSS**	420	350
12	1/2	M 18×1.5	3/4-16	24	9.9	11	38.5	26.5	71	**8M18F82EDMXS**	**8M18F82EDMXSS**	350	350
12	1/2	M 22×1.5	3/4-16	27	9.9	14	42.0	28.0	70	**8M22F82EDMXS**	**8M22F82EDMXSS**	350	350
14, 15, 16	5/8	M 18×1.5	7/8-14	24	12.3	11	42.5	30.5	104	**10M18F82EDMXS**	**10M18F82EDMXSS**	350	350
14, 15, 16	5/8	M 22×1.5	7/8-14	27	12.3	14	44.5	30.5	161	**10M22F82EDMXS**	**10M22F82EDMXSS**	350	350
18, 20	3/4	M 18×1.5	1 1/16-12	27	15.5	11	44.5	32.5	85	**12M18F82EDMXS**	**12M18F82EDMXSS**	350	350
18, 20	3/4	M 22×1.5	1 1/16-12	27	15.5	14	49.0	35.0	273	**12M22F82EDMXS**	**12M22F82EDMXSS**	350	350
18, 20	3/4	M 26×1.5	1 1/16-12	32	15.5	18	51.0	35.0	135	**12M26F82EDMXS**	**12M26F82EDMXSS**	350	350
18, 20	3/4	M 27×2.0	1 1/16-12	32	15.5	16	51.0	35.0	431	**12M27F82EDMXS**	**12M27F82EDMXSS**	350	350
25	1	M 26×1.5	1 5/16-12	36	21.5	18	55.0	39.0	350	**16M26F82EDMXS**	**16M26F82EDMXSS**	280	280
25	1	M 27×2.0	1 5/16-12	36	21.5	16	52.5	36.5	360	**16M27F82EDMXS**	**16M27F82EDMXSS**	280	280
25	1	M 33×2.0	1 5/16-12	41	21.5	23	54.5	36.5	431	**16M33F82EDMXS**	**16M33F82EDMXSS**	280	280
28, 30, 32	1 1/4	M 42×2.0	1 5/8-12	50	27.5	30	60.0	40.0	431	**20M42F82EDMXS**	**20M42F82EDMXSS**	280	210
35, 38	1 1/2	M 48×2.0	1 7/8-12	55	33.0	36	67.0	45.0	580	**24M48F82EDMXS**	**24M48F82EDMXSS**	210	140

Steel, stainless steel and brass Triple-Lok® parts are delivered with NBR elastomeric seals as standard. For more details on other seal materials see page K92.

Order codes shown are part of our current manufacturing programme.

Imperial and metric parts may vary in hexagon dimensions.

$\frac{\text{PN (bar)}}{10} = \text{PN (MPa)}$

Do not create drawings from these dimensions, they are subject to change and ISO manufacturing allowances.

F8OMX Male stud connector

Triple-Lok® 37° Flare end / Male metric thread – O-ring + retainer ring

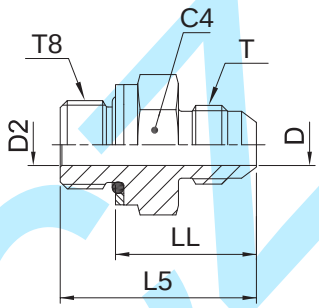

Tube O.D. mm	Tube O.D. in.	Thread Metric T8	Thread UN/UNF-2A T	C4 mm	D mm	D2 mm	L5 mm	LL mm	Weight (steel) g/1 piece	Triple-Lok® Steel	Triple-Lok® Stainless Steel	PN (bar) S	PN (bar) SS
6	1/4	M 10×1.0	7/16-20	14	4.4	4.4	30.0	21.5	25	**4M10F8OMXS**	**4M10F8OMXSS**	350	350
6	1/4	M 12×1.5	7/16-20	17	4.4	6.0	33.0	22.0	35	**4M12F8OMXS**	**4M12F8OMXSS**	420	350
8	5/16	M 10×1.0	1/2-20	14	6.0	4.5	30.0	21.5	25	**5M10F8OMXS**	**5M10F8OMXSS**	350	350
8	5/16	M 12×1.5	1/2-20	19	6.0	6.0	33.0	22.0	35	**5M12F8OMXS**	**5M12F8OMXSS**	420	350
8	5/16	M 14×1.5	1/2-20	19	6.0	6.0	34.0	24.0	35	**5M14F8OMXS**	**5M14F8OMXSS**	350	350
10	3/8	M 12×1.5	9/16-18	17	7.5	6.0	34.0	23.0	35	**6M12F8OMXS**	**6M12F8OMXSS**	420	350
10	3/8	M 14×1.5	9/16-18	19	7.5	7.5	34.0	23.0	35	**6M14F8OMXS**	**6M14F8OMXSS**	350	350
10	3/8	M 16×1.5	9/16-18	22	7.5	9.0	35.5	24.0	51	**6M16F8OMXS**	**6M16F8OMXSS**	350	350
10	3/8	M 18×1.5	9/16-18	24	7.5	11.0	36.5	24.0	60	**6M18F8OMXS**	**6M18F8OMXSS**	250	350
12	1/2	M 14×1.5	3/4-16	19	9.9	7.5	36.0	25.0	38	**8M14F8OMXS**	**8M14F8OMXSS**	350	350
12	1/2	M 16×1.5	3/4-16	22	9.9	9.0	38.0	26.5	55	**8M16F8OMXS**	**8M16F8OMXSS**	350	350
12	1/2	M 18×1.5	3/4-16	24	9.9	11.0	39.0	26.5	66	**8M18F8OMXS**	**8M18F8OMXSS**	250	250
12	1/2	M 22×1.5	3/4-16	27	9.9	14.0	41.0	28.0	70	**8M22F8OMXS**	**8M22F8OMXSS**	250	250
14, 15, 16	5/8	M 18×1.5	7/8-14	24	12.3	11.0	43.0	30.5	71	**10M18F8OMXS**	**10M18F8OMXSS**	250	250
14, 15, 16	5/8	M 20×1.5	7/8-14	27	12.3	11.0	44.5	33.0	90	**10M20F8OMXS**	**10M20F8OMXSS**	250	250
14, 15, 16	5/8	M 22×1.5	7/8-14	27	12.3	14.0	43.5	30.5	98	**10M22F8OMXS**	**10M22F8OMXSS**	250	250
18, 20	3/4	M 18×1.5	1 1/16-12	27	15.5	11.0	50.5	38.0	85	**12M18F8OMXS**	**12M18F8OMXSS**	250	250
18, 20	3/4	M 22×1.5	1 1/16-12	27	15.5	14.0	48.0	35.0	104	**12M22F8OMXS**	**12M22F8OMXSS**	250	250
18, 20	3/4	M 24×1.5	1 1/16-12	30	15.5	14.0	44.5	32.5	120	**12M26F8OMXS**	**12M26F8OMXSS**	210	210
18, 20	3/4	M 27×2.0	1 1/16-12	32	15.5	18.0	51.0	35.0	154	**12M27F8OMXS**	**12M27F8OMXSS**	210	210
25	1	M 22×1.5	1 5/16-12	36	21.5	14.0	47.5	34.5	180	**16M22F8OMXS**	**16M22F8OMXSS**	250	250
25	1	M 26×1.5	1 5/16-12	36	21.5	15.5	51.5	34.5	202	**16M26F8OMXS**	**16M26F8OMXSS**	210	210
25	1	M 27×2.0	1 5/16-12	36	21.5	18.0	50.5	34.5	202	**16M27F8OMXS**	**16M27F8OMXSS**	210	210
25	1	M 33×2.0	1 5/16-12	41	21.5	23.0	53.0	37.0	267	**16M33F8OMXS**	**16M33F8OMXSS**	210	210
28, 30, 32	1 1/4	M 42×2.0	1 5/8-12	50	27.5	30.0	55.0	39.0	427	**20M42F8OMXS**	**20M42F8OMXSS**	210	210
35, 38	1 1/2	M 48×2.0	1 7/8-12	55	33.0	36.0	59.5	42.0	545	**24M48F8OMXS**	**24M48F8OMXSS**	140	140

Steel, stainless steel and brass Triple-Lok® parts are delivered with NBR elastomeric seals as standard. For more details on other seal materials see page K92.

Order codes shown are part of our current manufacturing programme.

Imperial and metric parts may vary in hexagon dimensions.

$\frac{\text{PN (bar)}}{10} = \text{PN (MPa)}$

Pressure ratings – PN shown, apply to Steel and Stainless Steel versions of the product.

Do not create drawings from these dimensions, they are subject to change and ISO manufacturing allowances.

FMTX Male stud connector

Triple-Lok® 37° Flare end / Male NPTF* thread (SAE 476)
SAE 070102 MS51500
*Stainless Steel = NPT to prevent galling

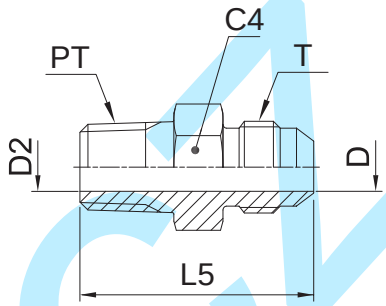

Tube O.D. mm	Tube O.D. in.	Thread NPT/NPTF PT	Thread UN/UNF-2A T	C4 mm	D mm	D2 mm	L5 mm	Weight (steel) g/1 piece	Triple-Lok® Steel	Triple-Lok® Stainless Steel	PN (bar) S	PN (bar) SS
	1/8	1/8-27	5/16-24	11.0	1.6	4.7	28.0	10	**2 FTX-S**		420	—
5	3/16	1/8-27	3/8-24	11.0	3.0	3.0	29.0	12	**3 FTX-S**		420	—
6	1/4	1/8-27	7/16-20	13.0	4.4	4.4	31.0	14	**4FMTXS**	**4FMTXSS**	420	350
6	1/4	1/4-18	7/16-20	14.0	4.4	4.4	36.0	26	**4-4FMTXS**	**4-4FMTXSS**	420	350
6	1/4	3/8-18	7/16-20	19.0	4.4	4.4	36.5	26	**4-6 FTX-S**	**4-6FMTXSS**	420	350
6	1/4	1/2-14	7/16-20	22.3	4.4	4.4	43.0	26	**4-8 FTX-S**	**4-8FMTXSS**	420	350
8	5/16	1/8-27	1/2-20	14.0	6.0	5.0	31.0	17	**5FMTXS**	**5FMTXSS**	420	350
8	5/16	1/4-18	1/2-20	14.0	6.0	6.0	36.0	25	**5-4FMTXS**	**5-4FMTXSS**	420	350
8	5/16	3/8-18	1/2-20	19.0	6.0	6.0	36.0	30	**5-6FMTXS**	**5-6FMTXSS**	420	350
10	3/8	1/4-18	9/16-18	17.0	7.5	7.5	36.5	25	**6FMTXS**	**6FMTXSS**	420	350
10	3/8	1/8-27	9/16-18	16.0	7.5	4.7	31.5	21	**6-2 FTX-S**	**6-2FMTXSS**	420	350
10	3/8	3/8-18	9/16-18	19.0	7.5	7.5	36.5	39	**6-6FMTXS**	**6-6FMTXSS**	420	350
10	3/8	1/2-14	9/16-18	22.0	7.5	7.5	43.0	47	**6-8FMTXS**	**6-8FMTXSS**	420	350
10	3/8	3/4-14	9/16-18	28.6	7.5	15.5	42.0	109	**6-12 FTX-S**	**6-12FMTXSS**	420	350
12	1/2	3/8-18	3/4-16	19.0	9.9	9.9	39.0	45	**8FMTXS**	**8FMTXSS**	420	350
12	1/2	1/4-18	3/4-16	19.0	9.9	7.0	39.0	42	**8-4FMTXS**	**8-4FMTXSS**	420	350
12	1/2	1/2-14	3/4-16	22.0	9.9	9.9	45.5	74	**8-8FMTXS**	**8-8FMTXSS**	420	350
12	1/2	3/4-14	3/4-16	27.0	9.9	9.9	47.0	121	**8-12FMTXS**	**8-12FMTXSS**	380	350
14, 15, 16	5/8	1/2-14	7/8-14	24.0	12.3	12.3	48.0	77	**10FMTXS**	**10FMTXSS**	350	350
14, 15, 16	5/8	3/8-18	7/8-14	24.0	12.3	10.0	43.0	63	**10-6FMTXS**	**10-6FMTXSS**	350	350
14, 15, 16	5/8	3/4-14	7/8-14	27.0	12.3	12.3	49.5	122	**10-12FMTXS**	**10-12FMTXSS**	350	350
18, 20	3/4	3/4-14	1 1/16-12	27.0	15.5	15.5	53.0	123	**12FMTX-S**	**12FMTXSS**	350	350
18, 20	3/4	3/8-18	1 1/16-12	28.5	15.5	10.3	47.5	90	**12-6 FTX-S**	**12-6FMTXSS**	350	350
18, 20	3/4	1/2-14	1 1/16-12	28.5	15.5	13.5	52.0	103	**12-8 FTX-S**	**12-8FMTXSS**	350	350
18, 20	3/4	1-11.5	1 1/16-12	35.0	15.5	15.5	57.0	176	**12-16 FTX-S**	**12-16FMTXSS**	310	280
22	7/8	3/4-14	1 3/16-12	31.7	18.3	18.3	53.0	137	**14 FTX-S**	**14FMTXSS**	280	245
25	1	1-11.5	1 5/16-12	36.0	21.5	21.5	58.5	189	**16FMTXS**	**16FMTXSS**	280	280
25	1	1/2-14	1 5/16-12	36.0	21.5	18.0	53.5	110	**16-8 FTX-S**	**16-8FMTXSS**	280	280
25	1	3/4-14	1 5/16-12	36.0	21.5	18.0	53.5	149	**16-12FMTXS**	**16-12FMTXSS**	280	280
25	1	1 1/4-11.5	1 5/16-12	47.6	21.4	21.4	54.0	331	**16-20 FTX-S**	**16-20FMTXSS**	280	280
28, 30, 32	1 1/4	1 1/4-11.5	1 5/8-12	46.0	27.5	32.0	62.0	315	**20FMTXS**	**20FMTXSS**	210	210
28, 30, 32	1 1/4	1-11.5	1 5/8-12	43.0	27.5	23.8	61.5	248	**20-16 FTX-S**	**20-16FMTXSS**	280	210
35, 38	1 1/2	1 1/2-11.5	1 7/8-12	50.0	33.0	38.0	68.0	430	**24FMTXS**	**24FMTXSS**	210	140
35, 38	1 1/2	1-11.5	1 7/8-12	51.0	33.3	24.0	66.5	310	**24-16 FTX-S**	**24-16FMTXSS**	210	140
35, 38	1 1/2	1 1/4-11.5	1 7/8-12	51.0	33.3	31.7	67.5	359	**24-20 FTX-S**	**24-20FMTXSS**	210	140
35, 38	1 1/2	2-11.5	1 7/8-12	66.7	33.3	33.3	72.5	720	**24-32 FTX-S**	**24-32FMTXSS**	140	140
	2	2-11.5	2 1/2-12	66.7	45.2	45.2	79.0	858	**32 FTX-S**	**32FMTXSS**	140	105
	2	1 1/2-11.5	2 1/2-12	66.7	45.2	38.0	78.0	720	**32-24 FTX-S**	**32-24FMTXSS**	140	105

Order codes shown are part of our current manufacturing programme.
Imperial and metric parts may vary in hexagon dimensions.

$\frac{\text{PN (bar)}}{10}$ = PN (MPa)

Pressure ratings – PN shown, apply to Steel and Stainless Steel versions of the product.
For Brass parts reduce pressures by 35%.
Do not create drawings from these dimensions, they are subject to change and ISO manufacturing allowances.

F3MX Male stud connector

Triple-Lok® 37° Flare end / Male BSPT thread (ISO 7)

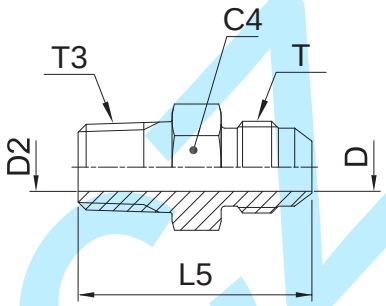

Tube O.D. mm	Tube O.D. in.	Thread BSPT T3	Thread UN/UNF-2A T	C4 mm	D mm	D2 mm	L5 mm	Weight (steel) g/1 piece	Triple-Lok® Steel	Triple-Lok® Stainless Steel	PN (bar) S	PN (bar) SS
6	1/4	1/8-28	7/16-20	13	4.4	4.4	31.0	13	**4F3MXS**	**4F3MXSS**	315	315
6	1/4	1/4-19	7/16-20	14	4.4	4.4	35.5	25	**4-4F3MXS**	**4-4F3MXSS**	315	315
8	5/16	1/8-28	1/2-20	14	6.0	7.0	35.0	17	**5F3MXS**	**5F3MXSS**	315	315
8	5/16	1/4-19	1/2-20	14	6.0	7.0	35.0	24	**5-4F3MXS**	**5-4F3MXSS**	315	315
10	3/8	1/4-19	9/16-18	17	7.5	7.0	35.5	25	**6F3MXS**	**6F3MXSS**	315	315
10	3/8	3/8-19	9/16-18	19	7.5	10.0	35.5	37	**6-6F3MXS**	**6-6F3MXSS**	315	315
10	3/8	1/2-14	9/16-18	22	7.5	13.5	43.0	45	**6-8F3MXS**	**6-8F3MXSS**	315	315
12	1/2	3/8-19	3/4-16	19	9.9	10.0	39.0	43	**8F3MXS**	**8F3MXSS**	315	315
12	1/2	1/4-19	3/4-16	19	9.9	7.0	38.0	41	**8-4F3MXS**	**8-4F3MXSS**	315	315
12	1/2	1/2-14	3/4-16	22	9.9	13.5	45.5	71	**8-8F3MXS**	**8-8F3MXSS**	315	315
14, 15, 16	5/8	1/2-14	7/8-14	24	12.3	13.5	48.0	74	**10F3MXS**	**10F3MXSS**	315	315
14, 15, 16	5/8	3/8-19	7/8-14	24	12.3	10.0	43.0	61	**10-6F3MXS**	**10-6F3MXSS**	315	315
14, 15, 16	5/8	3/4-14	7/8-14	27	12.3	18.0	48.5	117	**10-12F3MXS**	**10-12F3MXSS**	160	160
18, 20	3/4	3/4-14	1 1/16-12	27	15.5	18.0	51.0	119	**12F3MXS**	**12F3MXSS**	160	160
18, 20	3/4	1/2-14	1 1/16-12	27	15.5	13.5	51.0	100	**12-8F3MXS**	**12-8F3MXSS**	315	315
18, 20	3/4	1-11	1 1/16-12	36	15.5	24.0	57.0	214	**12-16F3MXS**	**12-16F3MXSS**	160	160
25	1	1-11	1 5/16-12	36	21.5	24.0	58.5	185	**16F3MXS**	**16F3MXSS**	160	160
25	1	3/4-14	1 5/16-12	36	21.5	18.0	53.5	146	**16-12F3MXS**	**16-12F3MXSS**	160	160
28, 30, 32	1 1/4	1 1/4-11	1 5/8-12	46	27.5	32.0	62.0	309	**20F3MXS**	**20F3MXSS**	160	160
28, 30, 32	1 1/4	1-11	1 5/8-12	46	27.5	24.0	61.5	243	**20-16F3MXS**	**20-16F3MXSS**	160	160
35, 38	1 1/2	1 1/2-11	1 7/8-12	50	33.0	38.0	68.0	421	**24F3MXS**	**24F3MXSS**	160	140
35, 38	1 1/2	1 1/4-11	1 7/8-12	50	33.0	32.0	67.0	352	**24-20F3MXS**	**24-20F3MXSS**	160	140

Order codes shown are part of our current manufacturing programme.

Imperial and metric parts may vary in hexagon dimensions.

$\frac{\text{PN (bar)}}{10}$ = PN (MPa)

Do not create drawings from these dimensions, they are subject to change and ISO manufacturing allowances.

F687OMX Swivel male stud

Triple-Lok® 37° Flare female swivel end / Male metric thread – O-ring (ISO 6149)

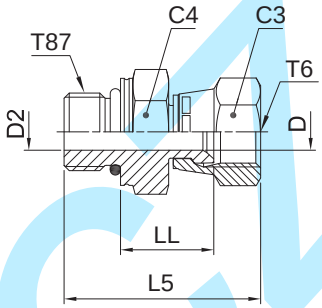

Tube O.D. mm	Tube O.D. in.	Thread Metric T87	Thread UN/UNF-2B T6	C4 mm	C3 mm	D mm	D2 mm	L5 mm	LL mm	Weight (steel) g/1 piece	Triple-Lok® Steel	Triple-Lok® Stainless Steel	PN (bar) S	PN (bar) SS
6	1/4	M 10×1.0	7/16-20	14	14	4.4	4.4	32	15.0	25	**4M10F687OMXS**	**4M10F687OMXSS**	500	350
6	1/4	M 12×1.5	7/16-20	17	14	4.4	6.0	35	15.0	30	**4M12F687OMXS**	**4M12F687OMXSS**	420	350
8	5/16	M 10×1.0	1/2-20	14	17	6.0	4.5	34	16.5	40	**5M10F687OMXS**	**5M10F687OMXSS**	420	350
8	5/16	M 12×1.5	1/2-20	17	17	6.0	6.0	37	16.5	64	**5M12F687OMXS**	**5M12F687OMXSS**	420	350
10	3/8	M 14×1.5	9/16-18	19	19	7.5	7.5	38	18.0	65	**6M14F687OMXS**	**6M14F687OMXSS**	350	350
10	3/8	M 16×1.5	9/16-18	22	19	7.5	9.0	40	19.0	75	**6M16F687OMXS**	**6M16F687OMXSS**	350	350
12	1/2	M 16×1.5	3/4-16	22	22	9.9	9.0	44	21.0	80	**8M16F687OMXS**	**8M16F687OMXSS**	350	350
12	1/2	M 18×1.5	3/4-16	24	22	9.9	11.0	45	21.0	90	**8M18F687OMXS**	**8M18F687OMXSS**	350	350
14, 15, 16	5/8	M 18×1.5	7/8-14	24	27	12.3	11.0	48	23.0	108	**10M18F687OMXS**	**10M18F687OMXSS**	350	350
14, 15, 16	5/8	M 22×1.5	7/8-14	27	27	12.3	14.0	49	23.0	115	**10M22F687OMXS**	**10M22F687OMXSS**	350	350
18, 20	3/4	M 22×1.5	1 1/16-12	27	32	15.5	14.0	52	24.5	183	**12M22F687OMXS**	**12M22F687OMXSS**	350	350
18, 20	3/4	M 27×2.0	1 1/16-12	32	32	15.5	18.0	55	24.5	197	**12M27F687OMXS**	**12M27F687OMXSS**	350	350
25	1	M 33×2.0	1 5/16-12	41	38	21.5	23.0	59	27.5	250	**16M33F687OMXS**	**16M33F687OMXSS**	250	280
28, 30, 32	1 1/4	M 42×2.0	1 5/8-12	50	50	27.5	30.0	63	31.0	500	**20M42F687OMXS**	**20M42F687OMXSS**	250	210
35, 38	1 1/2	M 48×2.0	1 7/8-12	55	60	33.0	36.0	72	33.0	688	**24M48F687OMXS**	**24M48F687OMXSS**	170	140

Steel, stainless steel and brass Triple-Lok® parts are delivered with NBR elastomeric seals as standard. For more details on other seal materials see page K92.

Order codes shown are part of our current manufacturing programme.

Imperial and metric parts may vary in hexagon dimensions.

$$\frac{\text{PN (bar)}}{10} = \text{PN (MPa)}$$

Do not create drawings from these dimensions, they are subject to change and ISO manufacturing allowances.

KOVOVÝ CZ

F65OMX Swivel male stud

Triple-Lok® 37° Flare female swivel end / Male UN/UNF thread – O-ring (ISO 11926)

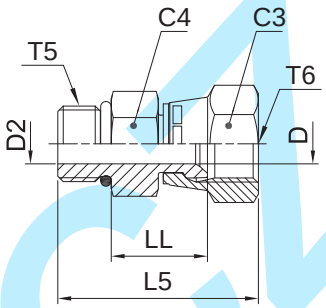

Tube O.D. mm	Tube O.D. in.	Thread UNF T5	Thread UN/UNF-2B T6	C4 mm	C3 mm	D mm	D2 mm	L5 mm	LL mm	Weight (steel) g/1 piece	Triple-Lok® Steel	PN (bar)
6	1/4	7/16-20	7/16-20	14.0	14.0	4.4	4.4	33.0	15.0	27	**4F65OMXS**	500
8	5/16	1/2-20	1/2-20	17.0	17.0	6.0	6.0	35.0	17.0	30	**5F65OMXS**	420
10	3/8	9/16-18	9/16-18	17.0	19.0	7.5	7.5	38.0	18.0	35	**6F65OMXS**	350
12	1/2	3/4-16	3/4-16	22.2	22.0	9.9	9.9	41.5	19.0	64	**8 F65OX-S**	350
14, 15, 16	5/8	7/8-14	7/8-14	25.4	25.4	12.3	12.3	46.0	20.5	112	**10 F65OX-S**	350
18, 20	3/4	1 1/16-12	1 1/16-12	28.6	28.6	15.5	15.5	54.0	25.0	183	**12 F65OX-S**	350
25	1	1 5/16-12	1 5/16-12	38.0	38.0	21.4	21.4	58.0	27.0	234	**16 F65OX-S**	250
28, 30, 32	1 1/4	1 5/8-12	1 5/8-12	51.0	51.0	27.5	27.5	63.0	32.0	500	**20 F65OX-S**	250

Steel, stainless steel and brass Triple-Lok® parts are delivered with NBR elastomeric seals as standard. For more details on other seal materials see page K92.

Order codes shown are part of our current manufacturing programme.

Imperial and metric parts may vary in hexagon dimensions.

$\frac{\text{PN (bar)}}{10}$ = PN (MPa)

Do not create drawings from these dimensions, they are subject to change and ISO manufacturing allowances.

kovaz.cz

F642EDMX Swivel male stud

Triple-Lok® 37° Flare female swivel end / Male BSPP thread – ED seal (ISO 1179)

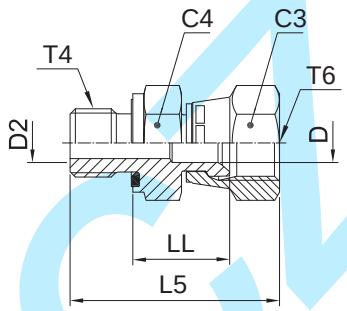

Tube O.D. mm	Tube O.D. in.	Thread BSPP T4	Thread UN/UNF-2B T6	C4 mm	C3 mm	D mm	D2 mm	L5 mm	LL mm	Weight (steel) g/1 piece	Triple-Lok® Steel	Triple-Lok® Stainless Steel	PN (bar) S	PN (bar) SS
6	1/4	1/8-28	7/16-20	14	14	4.4	4.4	32	15.0	30	**4F642EDMXS**	**4F642EDMXSS**	500	350
6	1/4	1/4-19	7/16-20	19	14	4.4	4.4	37	16.5	30	**4-4F642EDMXS**	**4-4F642EDMXSS**	420	350
8	5/16	1/8-28	1/2-20	14	17	6.0	4.0	34	17.0	28	**5F642EDMXS**	**5F642EDMXSS**	420	350
8	5/16	1/4-19	1/2-20	19	17	6.0	6.0	39	17.5	37	**5-4F642EDMXS**	**5-4F642EDMXSS**	420	350
10	3/8	1/4-19	9/16-18	19	19	7.5	6.0	40	18.5	41	**6F642EDMXS**	**6F642EDMXSS**	350	350
10	3/8	3/8-19	9/16-18	22	19	7.5	9.0	41	19.0	57	**6-6F642EDMXS**	**6-6F642EDMXSS**	350	350
12	1/2	3/8-19	3/4-16	22	22	9.9	9.0	44	21.0	62	**8F642EDMXS**	**8F642EDMXSS**	350	350
12	1/2	1/4-19	3/4-16	19	22	9.9	6.0	44	21.0	60	**8-4F642EDMXS**	**8-4F642EDMXSS**	350	350
12	1/2	1/2-14	3/4-16	27	22	9.9	14.0	48	23.0	75	**8-8F642EDMXS**	**8-8F642EDMXSS**	350	350
14, 15, 16	5/8	1/2-14	7/8-14	27	27	12.3	14.0	50	23.0	127	**10F642EDMXS**	**10F642EDMXSS**	350	350
14, 15, 16	5/8	3/8-19	7/8-14	22	27	12.3	9.0	44	21.0	84	**10-6F642EDMXS**	**10-6F642EDMXSS**	350	350
				36	32	12.3	12.3	49	23.0	169	**10-12F642EDMXS**	**10-12F642EDMXSS**	350	350
18, 20	3/4	3/4-14	1 1/16-12	32	32	15.5	18.0	55	24.5	183	**12F642EDMXS**	**12F642EDMXSS**	350	350
18, 20	3/4	1/2-14	1 1/16-12	27	32	15.5	14.0	53	24.5	170	**12-8F642EDMXS**	**12-8F642EDMXSS**	350	350
25	1	1-11	1 5/16-12	41	38	21.5	23.0	61	27.5	296	**16F642EDMXS**	**16F642EDMXSS**	250	250
25	1	3/4-14	1 5/16-12	32	38	21.5	18.0	59	27.5	254	**16-12F642EDMXS**	**16-12F642EDMXSS**	250	250
28, 30, 33	1 1/4	1 1/4-11	1 5/8-12	50	50	27.5	30.0	68	32.0	500	**20F642EDMXS**	**20F642EDMXSS**	250	210
28, 30, 32	1 1/4	1-11	1 5/8-12	41	50	27.5	23.0	70	36.5	440	**20-16F642EDMXS**	**20-16F642EDMXSS**	250	210
35, 38	1 1/2	1 1/2-11	1 7/8-12	55	60	33.0	36.0	80	36.0	739	**24F642EDMXS**	**24F642EDMXSS**	170	140

Steel, stainless steel and brass Triple-Lok® parts are delivered with NBR elastomeric seals as standard. For more details on other seal materials see page K92.

Order codes shown are part of our current manufacturing programme.

Imperial and metric parts may vary in hexagon dimensions.

$\frac{\text{PN (bar)}}{10} = \text{PN (MPa)}$

Do not create drawings from these dimensions, they are subject to change and ISO manufacturing allowances.

KOVOVEZ

F64OMX Swivel male stud

Triple-Lok® 37° Flare female swivel end /
Male BSPP thread – O-ring + retainer ring (ISO 1179)

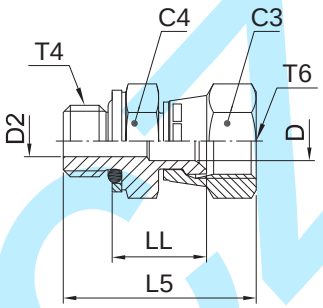

Tube O.D. mm	Tube O.D. in.	Thread BSPP T4	Thread UN/UNF-2B T6	C4 mm	C3 mm	D mm	D2 mm	L5 mm	LL mm	Weight (steel) g/1 piece	Triple-Lok® Steel	Triple-Lok® Stainless Steel	PN (bar) S	PN (bar) SS
6	1/4	1/8-28	7/16-20	17	14	4.4	4.4	32	17.0	30	**4F64OMXS**	**4F64OMXSS**	350	350
6	1/4	1/4-19	7/16-20	19	14	4.4	6.0	34	17.0	30	**4-4F64OMXS**	**4-4F64OMXSS**	350	350
8	5/16	1/8-28	1/2-20	17	17	6.0	4.0	32	17.0	28	**5F64OMXS**	**5F64OMXSS**	350	350
8	5/16	1/4-19	1/2-20	19	17	7.5	6.0	36	18.0	37	**5-4F64OMXS**	**5-4F64OMXSS**	350	350
10	3/8	1/4-19	9/16-18	19	19	7.5	6.0	37	18.0	41	**6F64OMXS**	**6F64OMXSS**	350	350
10	3/8	3/8-19	9/16-18	22	19	7.5	9.0	38	19.0	57	**6-6F64OMXS**	**6-6F64OMXSS**	350	350
12	1/2	3/8-19	3/4-16	22	22	9.9	9.0	41	21.0	62	**8F64OMXS**	**8F64OMXSS**	350	350
12	1/2	1/4-19	3/4-16	19	22	9.9	6.0	43	20.0	57	**8-4F64OMXS**	**8-4F64OMXSS**	350	350
12	1/2	1/2-14	3/4-16	30	22	9.9	14.0	46	23.0	75	**8-8F64OMXS**	**8-8F64OMXSS**	350	350
14, 15, 16	5/8	1/2-14	7/8-14	30	27	12.3	14.0	50	24.5	127	**10F64OMXS**	**10F64OMXSS**	350	350
14, 15, 16	5/8	3/8-19	7/8-14	22	27	12.3	9.0	44	22.5	84	**10-6F64OMXS**	**10-6F64OMXSS**	350	350
18, 20	3/4	3/4-14	1 1/16-12	36	32	15.5	18.0	52	23.5	183	**12F64OMXS**	**12F64OMXSS**	280	280
18, 20	3/4	1/2-14	1 1/16-12	30	32	15.5	14.0	50	21.5	169	**12-8F64OMXS**	**12-8F64OMXSS**	350	350
25	1	1-11	1 5/16-12	46	38	21.5	23.0	59	27.0	296	**16F64OMXS**	**16F64OMXSS**	250	250
25	1	3/4-14	1 5/16-12	36	38	21.5	18.0	54	26.0	253	**16-12F64OMXS**	**16-12F64OMXSS**	250	250
28, 30, 32	1 1/4	1 1/4-11	1 5/8-12	50	50	27.5	30.0	64	32.0	500	**20F64OMXS**	**20F64OMXSS**	250	175
28, 30, 32	1 1/4	1-11	1 5/8-12	46	50	27.5	23.0	63	31.0	420	**20-16F64OMXS**	**20-16F64OMXSS**	250	175
35, 38	1 1/2	1 1/2-11	1 7/8-12	55	60	33.0	36.0	73	36.0	739	**24F64OMXS**	**24F64OMXSS**	170	140

Steel, stainless steel and brass Triple-Lok® parts are delivered with NBR elastomeric seals as standard. For more details on other seal materials see page K92.

Order codes shown are part of our current manufacturing programme.

Imperial and metric parts may vary in hexagon dimensions.

$\frac{\text{PN (bar)}}{10} = \text{PN (MPa)}$

Do not create drawings from these dimensions, they are subject to change and ISO manufacturing allowances.

KOVOVÝ.CZ

F682EDMX Swivel male stud

Triple-Lok® 37° Flare female swivel end / Male metric thread – ED seal (ISO 9974)

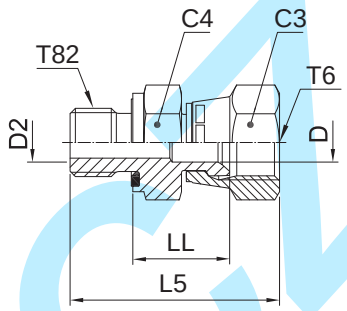

Tube O.D. mm	Tube O.D. in.	Thread Metric T82	Thread UN/UNF-2B T6	C4 mm	C3 mm	D mm	D2 mm	L5 mm	LL mm	Weight (steel) g/1 piece	Triple-Lok® Steel	Triple-Lok® Stainless Steel	PN (bar) S	PN (bar) SS
6	1/4	M 10×1.0	7/16-20	14	14	4.4	4.0	32	15.0	28	**4M10F682EDMXS**	**4M10F682EDMXSS**	500	350
8	5/16	M 12×1.5	1/2-20	17	17	6.0	6.0	38	17.0	32	**5M12F682EDMXS**	**5M12F682EDMXSS**	420	350
10	3/8	M 14×1.5	9/16-18	19	19	7.5	7.0	40	18.0	42	**6M14F682EDMXS**	**6M14F682EDMXSS**	350	350
12	1/2	M 16×1.5	3/4-16	22	22	9.9	9.0	44	21.0	62	**8M16F682EDMXS**	**8M16F682EDMXSS**	350	350
12	1/2	M 18×1.5	3/4-16	24	22	9.9	11.0	44	21.0	70	**8M18F682EDMXS**	**8M18F682EDMXSS**	350	350
14, 15, 16	5/8	M 18×1.5	7/8-14	24	27	12.3	11.0	48	23.0	125	**10M18F682EDMXS**	**10M18F682EDMXSS**	350	350
14, 15, 16	5/8	M 22×1.5	7/8-14	27	27	12.3	14.0	50	23.0	155	**10M22F682EDMXS**	**10M22F682EDMXSS**	350	350
18, 20	3/4	M 22×1.5	1 1/16-12	27	32	15.5	14.0	52	24.5	160	**12M22F682EDMXS**	**12M22F682EDMXSS**	350	350
18, 20	3/4	M 27×2.0	1 1/16-12	32	32	15.5	15.5	55	24.5	172	**12M27F682EDMXS**	**12M27F682EDMXSS**	350	350
25	1	M 33×2.0	1 5/16-12	41	38	21.5	23.0	61	26.5	259	**16M33F682EDMXS**	**16M33F682EDMXSS**	250	250
28, 30, 32	1 1/4	M 42×2.0	1 5/8-12	50	50	27.5	30.0	68	32.0	484	**20M42F682EDMXS**	**20M42F682EDMXSS**	250	210

Steel, stainless steel and brass Triple-Lok® parts are delivered with NBR elastomeric seals as standard. For more details on other seal materials see page K92.

Order codes shown are part of our current manufacturing programme.

Imperial and metric parts may vary in hexagon dimensions.

$\frac{\text{PN (bar)}}{10} = \text{PN (MPa)}$

Do not create drawings from these dimensions, they are subject to change and ISO manufacturing allowances.

Kovarcz

F68OMX Swivel male stud

Triple-Lok® 37° Flare female swivel end / Male metric thread O-ring + retaining ring

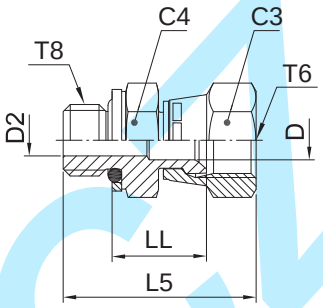

Tube O.D. mm	Tube O.D. in.	Thread Metric T8	Thread UN/UNF-2B T6	C4 mm	C3 mm	D mm	D2 mm	L5 mm	LL mm	Weight (steel) g/1 piece	Triple-Lok® Steel	PN (bar)
6	1/4	M 10×1.0	7/16-20	14	14	4.4	4.0	32	15.0	28	**4M10F68OMXS**	350
8	5/16	M 12×1.5	1/2-20	17	17	6.0	6.0	37	18.0	32	**5M12F68OMXS**	420
10	3/8	M 14×1.5	9/16-18	19	19	7.5	7.0	38	19.5	42	**6M14F68OMXS**	350
12	1/2	M 16×1.5	3/4-16	22	22	9.9	7.5	44	23.0	62	**8M16F68OMXS**	350
12	1/2	M 18×1.5	3/4-16	24	22	9.9	11.0	45	23.0	62	**8M18F68OMXS**	250
14, 15, 16	5/8	M 18×1.5	7/8-14	24	27	12.3	11.0	48	25.0	127	**10M18F68OMXS**	250
14, 15, 16	5/8	M 22×1.5	7/8-14	27	27	12.3	14.0	49	25.0	155	**10M22F68OMXS**	250
18, 20	3/4	M 27×2.0	1 1/16-12	32	32	15.5	15.5	55	26.0	172	**12M27F68OMXS**	210
25	1	M 33×2.0	1 5/16-12	41	38	21.5	23.0	57	29.0	259	**16M33F68OMXS**	210
28, 30, 32	1 1/4	M 42×2.0	1 5/8-12	50	50	27.5	30.0	63	33.0	484	**20M42F68OMXS**	210

Steel, stainless steel and brass Triple-Lok® parts are delivered with NBR elastomeric seals as standard. For more details on other seal materials see page K92.

Order codes shown are part of our current manufacturing programme.

Imperial and metric parts may vary in hexagon dimensions.

$\frac{\text{PN (bar)}}{10}$ = PN (MPa)

Do not create drawings from these dimensions, they are subject to change and ISO manufacturing allowances.

Kovar.cz

F6MX Swivel male stud

Triple-Lok® 37° Flare female swivel end / Male NPT* thread (SAE 476)

*Stainless Steel = NPT to prevent galling

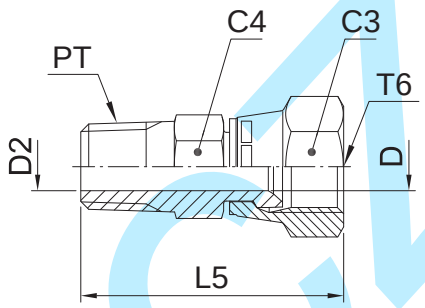

Tube O.D. mm	Tube O.D. in.	Thread NPT/NPTF PT	Thread UN/UNF-2B T6	C4 mm	C3 mm	D mm	D2 mm	L5 mm	Weight (steel) g/1 piece	Triple-Lok® Steel	Triple-Lok® Stainless Steel	PN (bar) S	PN (bar) SS
6	1/4	1/8-27	7/16-20	14.3	14.3	4.4	4.4	31	18	**4 F6X-S**	**4F6MXSS**	420	350
6	1/4	1/4-18	7/16-20	14.3	14.3	4.4	4.4	39	19	**4-4 F6X-S**	**4-4F6MXSS**	420	350
8	5/16	1/8-27	1/2-20	14.0	17.0	6.0	5.0	35	26	**5F6MXS**	**5F6MXSS**	420	350
8	5/16	1/4-18	1/2-20	16.0	16.0	6.0	6.0	40	37	**5-4 F6X-S**	**5-4F6MXSS**	420	350
10	3/8	1/4-18	9/16-18	17.5	17.5	7.1	7.1	40	30	**6 F6X-S**	**6F6MXSS**	350	350
10	3/8	3/8-18	9/16-18	19.0	17.5	7.5	7.5	43	48	**6-6 F6X-S**	**6-6F6MXSS**	350	350
12	1/2	3/8-18	3/4-16	22.2	22.2	9.9	9.9	44	50	**8 F6X-S**	**8F6MXSS**	350	350
12	1/2	1/4-18	3/4-16	19.0	22.0	9.9	7.0	44	46	**8-4F6MXS**	**8-4F6MXSS**	350	350
12	1/2	1/2-14	3/4-16	22.2	22.2	9.9	9.9	49	69	**8-8 F6X-S**	**8-8F6MXSS**	350	350
14, 15, 16	5/8	1/2-14	7/8-14	25.4	25.4	12.3	12.3	52	75	**10 F6X-S**	**10F6MXSS**	350	350
14, 15, 16	5/8	3/8-18	7/8-14	25.4	25.4	10.3	10.3	47	67	**10-6 F6X-S**	**10-6F6MXSS**	350	350
18, 20	3/4	3/4-14	1 1/16-12	31.8	31.8	15.5	15.5	55	125	**12 F6X-S**	**12F6MXSS**	350	350
18, 20	3/4	1/2-14	1 1/16-12	31.8	31.8	15.5	13.5	55	124	**12-8 F6X-S**	**12-8F6MXSS**	350	350
25	1	1-11.5	1 5/16-12	38.0	38.3	21.4	21.4	64	204	**16 F6X-S**	**16F6MXSS**	250	250
25	1	3/4-14	1 5/16-12	38.0	38.3	21.4	18.3	59	169	**16-12 F6X-S**	**16-12F6MXSS**	250	250
28, 30, 32	1 1/4	1 1/4-11.5	1 5/8-12	50.8	50.8	27.4	27.4	70	496	**20 F6X-S**	**20F6MXSS**	210	210
35, 38	1 1/2	1 1/2-11.5	1 7/8-12	57.2	57.2	33.3	33.3	77	750	**24 F6X-S**	**24F6MXSS**	170	170

Order codes shown are part of our current manufacturing programme.

Imperial and metric parts may vary in hexagon dimensions.

$\frac{\text{PN (bar)}}{10}$ = PN (MPa)

Do not create drawings from these dimensions, they are subject to change and ISO manufacturing allowances.

KOVOVEZ

F63MX Swivel male stud

Triple-Lok® 37° Flare female swivel end / Male BSPT thread (ISO 7)

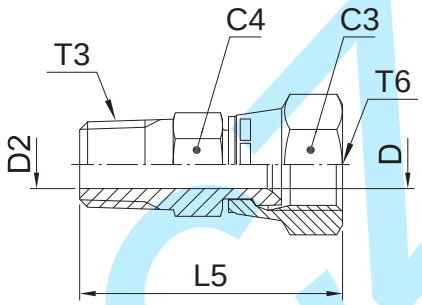

Tube O.D. mm	Tube O.D. in.	Thread BSPT T3	Thread UN/UNF-2B T6	C4 mm	C3 mm	D mm	D2 mm	L5 mm	Weight (steel) g/1 piece	Triple-Lok® Steel	Triple-Lok® Stainless Steel	PN (bar) S	PN (bar) SS
6	1/4	1/8-28	7/16-20	13	14	4.4	5.0	33	18	**4F63MXS**	**4F63MXSS**	315	315
6	1/4	1/4-19	7/16-20	14	14	4.4	7.0	38	19	**4-4F63MXS**	**4-4F63MXSS**	315	315
8	5/16	1/4-19	1/2-20	14	17	6.0	7.0	40	37	**5-4F63MXS**	**5-4F63MXSS**	315	315
10	3/8	1/4-19	9/16-18	14	19	7.5	7.0	41	30	**6F63MXS**	**6F63MXSS**	315	315
10	3/8	3/8-19	9/16-18	19	19	7.5	10.0	41	48	**6-6F63MXS**	**6-6F63MXSS**	315	315
12	1/2	3/8-19	3/4-16	19	22	9.9	9.9	44	50	**8F63MXS**	**8F63MXSS**	315	315
12	1/2	1/4-19	3/4-16	19	22	9.9	7.0	44	46	**8-4F63MXS**	**8-4F63MXSS**	315	315
14, 15, 16	5/8	1/2-14	7/8-14	22	27	12.3	13.5	53	75	**10F63MXS**	**10F63MXSS**	315	315
14, 15, 16	5/8	3/8-19	7/8-14	22	27	12.3	10.0	48	67	**10-6F63MXS**	**10-6F63MXSS**	315	315
18, 20	3/4	3/4-14	1 1/16-12	30	32	15.5	18.0	56	125	**12F63MXS**	**12F63MXSS**	160	160
18, 20	3/4	1/2-14	1 1/16-12	27	32	15.5	13.5	56	120	**12-8F63MXS**	**12-8F63MXSS**	315	315
25	1	1-11	1 5/16-12	36	38	21.5	24.0	64	204	**16F63MXS**	**16F63MXSS**	160	160
25	1	3/4-14	1 5/16-12	32	38	21.5	18.0	59	165	**16-12F63MXS**	**16-12F63MXSS**	160	160
28, 30, 32	1 1/4	1 1/4-11	1 5/8-12	46	50	27.5	32.0	70	496	**20F63MXS**	**20F63MXSS**	160	160

Order codes shown are part of our current manufacturing programme.

Imperial and metric parts may vary in hexagon dimensions.

$\frac{\text{PN (bar)}}{10} = \text{PN (MPa)}$

Do not create drawings from these dimensions, they are subject to change and ISO manufacturing allowances.

C87OMX Male stud elbow

Triple-Lok® 37° Flare end /
Adjustable metric thread – O-ring (ISO 6149)

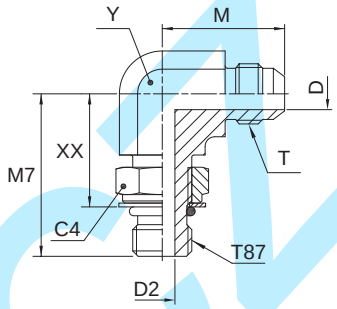

Tube O.D. mm	Tube O.D. in.	Thread Metric T87	Thread UN/UNF-2A T	C4 mm	D mm	D2 mm	M mm	M7 mm	XX mm	Y mm	Weight (steel) g/1 piece	Triple-Lok® Steel	Triple-Lok® Stainless Steel	PN (bar) S	PN (bar) SS
6	1/4	M 10×1.0	7/16-20	14	4.4	4.5	23	27	19	11	17	**4M10C87OMXS**	**4M10C87OMXSS**	420	350
6	1/4	M 12×1.5	7/16-20	17	4.4	6.0	24	31	19	13	20	**4M12C87OMXS**	**4M12C87OMXSS**	420	350
8	5/16	M 10×1.0	1/2-20	14	6.0	4.5	24	26	17	13	22	**5M10C87OMXS**	**5M10C87OMXSS**	420	350
8	5/16	M 12×1.5	1/2-20	17	6.0	6.0	24	31	19	13	25	**5M12C87OMXS**	**5M12C87OMXSS**	420	350
10	3/8	M 14×1.5	9/16-18	19	7.5	7.5	27	34	22	14	31	**6M14C87OMXS**	**6M14C87OMXSS**	420	350
10	3/8	M 16×1.5	9/16-18	22	7.5	9.0	29	38	26	19	55	**6M16C87OMXS**	**6M16C87OMXSS**	350	350
10	3/8	M 16×1.5	3/4-16	22	9.9	9.0	32	38	26	19	65	**8M16C87OMXS**	**8M16C87OMXSS**	350	350
12	1/2	M 18×1.5	3/4-16	24	9.9	11.0	32	38	25	19	66	**8M18C87OMXS**	**8M18C87OMXSS**	350	350
14, 15, 16	5/8	M 18×1.5	7/8-14	24	12.3	11.0	37	42	29	22	99	**10M18C87OMXS**	**10M18C87OMXSS**	350	350
14, 15, 16	5/8	M 22×1.5	7/8-14	27	12.3	14.0	37	43	29	22	99	**10M22C87OMXS**	**10M22C87OMXSS**	350	350
18, 20	3/4	M 22×1.5	1 1/16-12	27	15.5	14.0	42	45	32	27	164	**12M22C87OMXS**	**12M22C87OMXSS**	350	350
18, 20	3/4	M 27×2.0	1 1/16-12	32	15.5	18.0	42	51	35	27	173	**12M27C87OMXS**	**12M27C87OMXSS**	350	350
25	1	M 27×2.0	1 5/16-12	32	21.5	18.0	46	53	37	33	287	**16M27C87OMXS**	**16M27C87OMXSS**	280	280
25	1	M 33×2.0	1 5/16-12	41	21.5	23.0	46	53	37	33	287	**16M33C87OMXS**	**16M33C87OMXSS**	280	280
28, 30, 32	1 1/4	M 42×2.0	1 5/8-12	50	27.5	30.0	52	58	42	41	575	**20M42C87OMXS**	**20M42C87OMXSS**	210	210
35, 38	1 1/2	M 48×2.0	1 7/8-12	55	33.0	36.0	59	64	46	48	874	**24M48C87OMXS**	**24M48C87OMXSS**	140	140

Steel, stainless steel and brass Triple-Lok® parts are delivered with NBR elastomeric seals as standard. For more details on other seal materials see page K92.

Order codes shown are part of our current manufacturing programme.

Imperial and metric parts may vary in hexagon dimensions.

$$\frac{\text{PN (bar)}}{10} = \text{PN (MPa)}$$

Do not create drawings from these dimensions, they are subject to change and ISO manufacturing allowances.

kovalek

C5OMX Male stud elbow

Triple-Lok® 37° Flare end /
Adjustable UN/UNF thread – O-ring (ISO 11926)
SAE 070220 MS51527

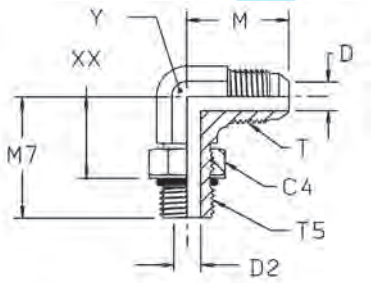

Tube O.D. mm	Tube O.D. in.	Thread UN/UNF-2A T5	Thread UN/UNF-2A T	C4 mm	D mm	D2 mm	M mm	M7 mm	XX mm	Y mm	Weight (steel) g/1 piece	Triple-Lok® Steel	Triple-Lok® Stainless Steel	PN (bar) S	PN (bar) SS
	1/8	5/16-24	5/16-24	11.1	1.5	1.5	20	24	15	11	25	**2 C50X-S**		350	—
	3/16	3/8-24	3/8-24	12.7	3.2	3.2	21	24	15	11	30	**3 C50X-S**		350	—
6	1/4	7/16-20	7/16-20	14.3	4.4	4.5	23	26	16	11	37	**4C50MXS**	**4C50MXSS**	420	350
6	1/4	9/16-18	7/16-20	17.5	4.4	7.5	27	32	20	14	43	**4-6 C50X-S**	**4-6C50MXSS**	420	350
8	5/16	1/2-20	1/2-20	16.0	6.0	6.0	24	29	18	13	47	**5C50MXS**	**5C50MXSS**	420	350
8	5/16	7/16-20	1/2-20	14.3	6.0	4.4	24	29	18	14	55	**5-4 C50X-S**	**5-4C50MXSS**	420	350
8	5/16	9/16-18	1/2-20	17.5	6.0	7.5	27	32	20	14	62	**5-6 C50X-S**	**5-6C50MXSS**	420	350
10	3/8	9/16-18	9/16-18	17.5	7.5	7.5	27	32	20	14	63	**6C50MXS**	**6C50MXSS**	420	350
10	3/8	7/16-20	9/16-18	14.3	7.5	4.4	27	30	20	14	99	**6-4 C50X-S**	**6-4C50MXSS**	420	350
10	3/8	1/2-20	9/16-18	16.0	7.5	6.0	27	30	19	14	99	**6-5 C50X-S**	**6-5C50MXSS**	420	350
10	3/8	3/4-16	9/16-18	22.2	7.5	10.0	29	37	24	19	125	**6-8 C50X-S**	**6-8C50MXSS**	420	350
10	3/8	7/8-14	9/16-18	25.4	7.5	12.5	31	43	28	22	145	**6-10 C50X-S**	**6-10C50MXSS**	350	350
12	1/2	3/4-16	3/4-16	22.2	9.9	10.0	32	37	24	19	160	**8C50MXS**	**8C50MXSS**	420	350
12	1/2	7/16-20	3/4-16	14.3	9.9	4.4	32	32	21	19	150	**8-4 C50X-S**	**8-4C50MXSS**	420	350
12	1/2	9/16-18	3/4-16	17.5	9.9	7.5	32	34	22	19	130	**8-6 C50X-S**	**8-6C50MXSS**	420	350
12	1/2	7/8-14	3/4-16	27.0	9.9	12.5	34	43	28	22	180	**8-10C50MXS**	**8-10C50MXSS**	350	350
12	1/2	1 1/16-12	3/4-16	31.8	9.9	15.5	36	49	32	27	210	**8-12 C50X-S**	**8-12C50MXSS**	350	350
14, 15, 16	5/8	7/8-14	7/8-14	27.0	12.3	12.5	37	43	28	22	186	**10C50MXS**	**10C50MXSS**	350	350
14, 15, 16	5/8	9/16-18	7/8-14	17.5	12.3	7.5	37	36	24	22	130	**10-6 C50X-S**	**10-6C50MXSS**	350	350
14, 15, 16	5/8	3/4-16	7/8-14	22.2	12.3	10.0	37	39	26	22	157	**10-8 C50X-S**	**10-8C50MXSS**	350	350
14, 15, 16	5/8	1 1/16-12	7/8-14	31.8	12.3	15.5	39	49	32	27	331	**10-12 C50X-S**	**10-12C50MXSS**	350	350
14, 15, 16	5/8	1 5/16-12	7/8-14	38.0	12.3	21.4	42	52	35	33	400	**10-16 C50X-S**	**10-16C50MXSS**	280	280
18, 20	3/4	1 1/16-12	1 1/16-12	32.0	15.5	15.5	42	49	32	27	301	**12C50MXS**	**12C50MXSS**	350	350
18, 20	3/4	3/4-16	1 1/16-12	22.2	15.5	10.0	42	41	28	27	297	**12-8 C50X-S**	**12-8C50MXSS**	350	350
18, 20	3/4	7/8-14	1 1/16-12	27.0	15.5	12.5	42	45	30	27	297	**12-10C50MXS**	**12-10C50MXSS**	350	350
18, 20	3/4	1 5/16-12	1 1/16-12	38.0	15.5	21.4	45	52	35	33	421	**12-16 C50X-S**	**12-16C50MXSS**	280	280
22	7/8	1 3/16-12	1 3/16-12	35.0	18.3	18.0	46	51	34	33	417	**14 C50X-S**		280	—
25	1	1 5/16-12	1 5/16-12	41.0	21.5	21.5	46	52	35	33	426	**16C50MXS**	**16C50MXSS**	280	280
25	1	1 1/16-12	1 5/16-12	31.8	21.5	15.5	46	52	35	33	418	**16-12 C50X-S**	**16-12C50MXSS**	280	280
25	1	1 5/8-12	1 5/16-12	47.6	21.5	27.4	51	57	40	41	546	**16-20 C50X-S**	**16-20C50MXSS**	280	210
28, 30, 32	1 1/4	1 5/8-12	1 5/8-12	47.6	27.4	27.4	52	57	40	41	674	**20 C50X-S**	**20C50MXSS**	280	210
28, 30, 32	1 1/4	1 5/16-12	1 5/8-12	38.0	27.4	21.5	52	57	40	41	650	**20-16 C50X-S**	**20-16C50MXSS**	280	280
28, 30, 32	1 1/4	1 7/8-12	1 5/8-12	54.0	27.4	33.4	56	61	44	48	920	**20-24 C50X-S**	**20-24C50MXSS**	210	210
35, 38	1 1/2	1 7/8-12	1 7/8-12	54.0	33.4	33.4	59	61	44	48	917	**24 C50X-S**	**24C50MXSS**	210	140
35, 38	1 1/2	1 5/8-12	1 7/8-12	47.6	33.4	27.4	59	61	44	48	920	**24-20 C50X-S**	**24-20C50MXSS**	210	140

Steel, stainless steel and brass Triple-Lok® parts are delivered with NBR elastomeric seals as standard. For more details on other seal materials see page K92.

Order codes shown are part of our current manufacturing programme.

Imperial and metric parts may vary in hexagon dimensions.

$\frac{\text{PN (bar)}}{10} = \text{PN (MPa)}$

Do not create drawings from these dimensions, they are subject to change and ISO manufacturing allowances.

CC5OX Extended male stud elbow

Triple-Lok® 37° Flare end / Male UNF thread – O-ring (ISO 11926)

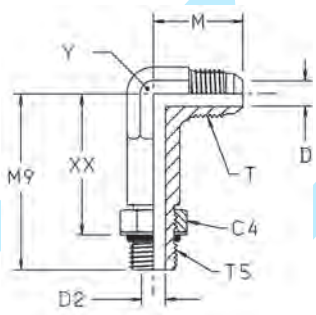

Tube O.D. mm	Tube O.D. in.	Thread UN/UNF-2A T5	Thread UN/UNF-2A T	C4 mm	D mm	D2 mm	M mm	M9 mm	XX mm	Y mm	Weight (steel) g/1 piece	Triple-Lok® Steel	PN (bar)
6	1/4	7/16-20	7/16-20	14.3	4.4	4.5	23	44	33	14	44	**4 CC5OX-S**	420
10	3/8	9/16-18	9/16-18	17.5	7.5	7.5	27	53	41	14	51	**6 CC5OX-S**	420
12	1/2	3/4-16	3/4-16	22.2	9.9	9.9	32	64	50	22	146	**8 CC5OX-S**	420
14, 15, 16	5/8	7/8-14	7/8-14	25.4	12.3	12.3	37	73	58	22	169	**10 CC5OX-S**	350
18, 20	3/4	1 1/16-12	1 1/16-12	32.0	15.5	15.5	42	85	67	37	291	**12 CC5OX-S**	350
25	1	1 5/16-12	1 5/16-12	38.0	21.5	21.5	46	95	78	33	481	**16 CC5OX-S**	280

Steel, stainless steel and brass Triple-Lok® parts are delivered with NBR elastomeric seals as standard. For more details on other seal materials see page K92.

Order codes shown are part of our current manufacturing programme.

Imperial and metric parts may vary in hexagon dimensions.

$$\frac{\text{PN (bar)}}{10} = \text{PN (MPa)}$$

Do not create drawings from these dimensions, they are subject to change and ISO manufacturing allowances.

K

Kovaz

C4OMX Male stud elbow

Triple-Lok® 37° Flare end / Adjustable BSPP thread O-ring + retaining ring (ISO 1179)

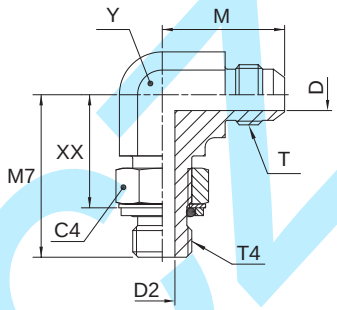

Tube O.D. mm	Tube O.D. in.	Thread BSPP T4	Thread UN/UNF-2A T	C4 mm	D mm	D2 mm	M mm	M7 mm	XX mm	Y mm	Weight (steel) g/1 piece	Triple-Lok® Steel	Triple-Lok® Stainless Steel	PN (bar) S	PN (bar) SS
6	1/4	1/8-28	7/16-20	14	4.4	4.4	23	27	19	11	37	**4C4OMXS**	**4C4OMXSS**	250	250
6	1/4	1/4-19	7/16-20	19	4.4	7.5	27	32	21	14	43	**4-4C4OMXS**	**4-4C4OMXSS**	250	200
6	1/4	3/8-19	7/16-20	22	4.4	9.9	29	37	26	19	50	**4-6C4OMXS**	**4-6C4OMXSS**	250	200
8	5/16	1/8-28	1/2-20	14	6.0	4.4	24	27	19	13	47	**5C4OMXS**	**5C4OMXSS**	250	250
8	5/16	1/4-19	1/2-20	19	6.0	7.5	27	32	21	14	55	**5-4C4OMXS**	**5-4C4OMXSS**	250	200
8	5/16	3/8-19	1/2-20	22	6.0	9.9	29	37	26	19	57	**5-6C4OMXS**	**5-6C4OMXSS**	250	200
10	3/8	1/4-19	9/16-18	19	7.5	7.5	27	32	21	14	61	**6C4OMXS**	**6C4OMXSS**	250	200
10	3/8	1/8-28	9/16-18	14	7.5	4.4	27	28	19	14	52	**6-2C4OMXS**	**6-2C4OMXSS**	250	200
10	3/8	3/8-19	9/16-18	22	7.5	9.9	29	37	26	19	95	**6-6C4OMXS**	**6-6C4OMXSS**	250	200
10	3/8	1/2-14	9/16-18	27	7.5	12.3	31	43	29	22	80	**6-8C4OMXS**	**6-8C4OMXSS**	250	200
12	1/2	3/8-19	3/4-16	22	9.9	9.9	32	37	27	19	102	**8C4OMXS**	**8C4OMXSS**	250	200
12	1/2	1/4-19	3/4-16	19	9.9	7.5	32	37	26	19	91	**8-4C4OMXS**	**8-4C4OMXSS**	250	200
12	1/2	1/2-14	3/4-16	27	9.9	12.3	34	43	29	22	155	**8-8C4OMXS**	**8-8C4OMXSS**	250	200
12	1/2	3/4-14	3/4-16	36	9.9	15.5	36	50	35	27	205	**8-12C4OMXS**	**8-12C4OMXSS**	250	200
14, 15,16	5/8	1/2-14	7/8-14	27	12.3	12.3	37	43	29	22	164	**10C4OMXS**	**10C4OMXSS**	250	200
14, 15,16	5/8	3/8-19	7/8-14	22	12.3	9.9	37	36	25	22	190	**10-6C4OMXS**	**10-6C4OMXSS**	250	200
14, 15,16	5/8	3/4-14	7/8-14	36	12.3	15.5	39	50	35	27	217	**10-12C4OMXS**	**10-12C4OMXSS**	250	200
18, 20	3/4	3/4-14	1 1/16-12	36	15.5	15.5	42	50	35	27	295	**12C4OMXS**	**12C4OMXSS**	250	200
18, 20	3/4	1/2-14	1 1/16-12	27	15.5	12.3	42	50	35	27	245	**12-8C4OMXS**	**12-8C4OMXSS**	250	200
18, 20	3/4	1-11	1 1/16-12	41	15.5	21.5	45	52	35	33	317	**12-16C4OMXS**	**12-16C4OMXSS**	250	200
25	1	1-11	1 5/16-12	41	21.5	21.5	46	52	36	33	425	**16C4OMXS**	**16C4OMXSS**	250	200
25	1	3/4-14	1 5/16-12	36	21.5	15.5	46	47	33	33	405	**16-12C4OMXS**	**16-12C40MXSS**	250	200
28, 30, 32	1 1/4	1 1/4-11	1 5/8-12	50	27.5	27.5	52	57	41	41	697	**20C4OMXS**	**20C4OMXSS**	210	160
28, 30, 32	1 1/4	1-11	1 5/8-12	41	21.5	27.5	52	57	41	41	650	**20-16C4OMXS**	**20-16C4OMXSS**	250	160
35, 38	1 1/2	1 1/2-11	1 7/8-12	55	33.0	33.0	59	61	45	48	953	**24C4OMXS**	**24C4OMXSS**	140	140
35, 38	1 1/2	1 1/4-11	1 7/8-12	50	33.0	27.5	59	61	45	48	964	**24-20C4OMXS**	**24-20C4OMXSS**	210	140

Steel, stainless steel and brass Triple-Lok® parts are delivered with NBR elastomeric seals as standard. For more details on other seal materials see page K92.

Order codes shown are part of our current manufacturing programme.

Imperial and metric parts may vary in hexagon dimensions.

$\frac{\text{PN (bar)}}{10}$ = PN (MPa)

Do not create drawings from these dimensions, they are subject to change and ISO manufacturing allowances.

C8OMX Male stud elbow

Triple-Lok® 37° Flare end / Male metric thread – O-ring + retainer ring

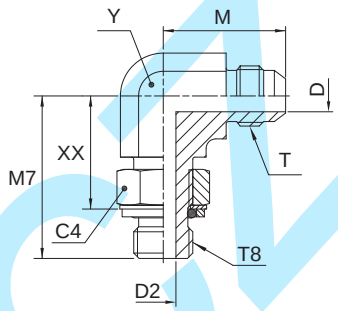

Tube O.D. mm	Tube O.D. in.	Thread Metric T8	Thread UN/UNF-2A T	C4 mm	D mm	D2 mm	M mm	M7 mm	XX mm	Y mm	Weight (steel) g/1 piece	Triple-Lok® Steel	PN (bar)
6	1/4	M 10×1.0	7/16-20	14	4.4	4.5	23	27.0	18	11	23	**4M10C8OMXS**	250
6	1/4	M 12×1.5	7/16-20	17	4.4	6.0	24	30.5	19	13	28	**4M12C8OMXS**	250
8	5/16	M 10×1.0	1/2-20	14	6.0	4.5	24	26.0	17	13	29	**5M10C8OMXS**	250
8	5/16	M 12×1.5	1/2-20	17	6.0	6.0	24	31.0	19	13	29	**5M12C8OMXS**	250
8	5/16	M 12×1.5	9/16-18	17	7.5	6.0	27	34.0	22	14	48	**6M12C8OMXS**	250
10	3/8	M 14×1.5	9/16-18	17	7.5	7.5	27	34.0	22	14	36	**6M14C8OMXS**	250
10	3/8	M 16×1.5	9/16-18	19	7.5	9.0	29	38.0	27	19	74	**6M16C8OMXS**	250
10	3/8	M 18×1.5	9/16-18	22	7.5	11.0	29	38.0	26	19	100	**6M18C8OMXS**	250
12	1/2	M 16×1.5	3/4-16	19	9.9	9.0	32	38.0	27	19	77	**8M16C8OMXS**	250
12	1/2	M 18×1.5	3/4-16	22	9.9	11.0	32	38.0	26	19	78	**8M18C8OMXS**	250
12	1/2	M 22×1.5	3/4-16	27	9.9	14.0	34	43.0	31	22	95	**8M22C8OMXS**	250
14, 15,16	5/8	M 18×1.5	7/8-14	22	12.3	11.0	37	42.0	31	22	104	**10M18C8OMXS**	250
14, 15,16	5/8	M 20×1.5	7/8-14	24	12.3	10.0	37	41.0	29	22	110	**10M20C8OMXS**	250
14, 15,16	5/8	M 22×1.5	7/8-14	27	12.3	14.0	37	43.0	31	22	119	**10M22C8OMXS**	250
14, 15,16	5/8	M 26×1.5	7/8-14	32	12.3	14.0	39	50.0	34	27	270	**10M26C8OMXS**	250
18, 20	3/4	M 22×1.5	1 1/16-12	27	15.5	14.0	42	45.0	34	27	198	**12M22C8OMXS**	250
18, 20	3/4	M 27×2.0	1 1/16-12	32	15.5	18.0	42	51.0	38	27	208	**12M27C8OMXS**	175
25	1	M 33×2.0	1 5/16-12	38	21.5	23.0	46	53.0	40	33	333	**16M33C8OMXS**	140
28, 30, 32	1 1/4	M 42×2.0	1 5/8-12	50	27.5	30.0	52	58.0	45	41	575	**20M42C8OMXS**	140
35, 38	1 1/2	M 48×2.0	1 7/8-12	55	33.0	36.0	59	64.0	49	48	872	**24M48C8OMXS**	140

Steel, stainless steel and brass Triple-Lok® parts are delivered with NBR elastomeric seals as standard. For more details on other seal materials see page K92.

Order codes shown are part of our current manufacturing programme.

Imperial and metric parts may vary in hexagon dimensions.

$$\frac{\text{PN (bar)}}{10} = \text{PN (MPa)}$$

Do not create drawings from these dimensions, they are subject to change and ISO manufacturing allowances.

kovaL.cz

CMTX Male stud elbow

Triple-Lok® 37° Flare end / Male NPTF* thread (SAE 476)
SAE 070202 MS51504
*Stainless Steel = NPT to prevent galling

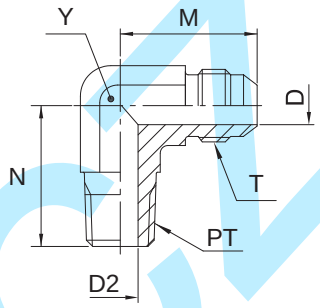

Tube O.D. mm	Tube O.D. in.	Thread NPT/NPTF PT	Thread UN/UNF-2A T	D mm	D2 mm	M mm	N mm	Y mm	Weight (steel) g/1 piece	Triple-Lok® Steel	Triple-Lok® Stainless Steel	PN (bar) S	PN (bar) SS
	1/8	1/8-27	5/16-24	1.6	4.8	20	18	11.0	12	**2 CTX-S**		420	—
	3/16	1/8-27	3/8-24	3.2	4.8	21	18	11.0	15	**3 CTX-S**		420	—
6	1/4	1/8-27	7/16-20	4.4	5.0	23	20	11.0	23	**4CMTXS**	**4CMTXSS**	420	350
6	1/4	1/4-18	7/16-20	4.4	7.0	27	28	14.0	42	**4-4 CTX-S**	**4-4CMTXSS**	420	350
6	1/4	3/8-18	7/16-20	4.4	10.3	28	31	19.0	26	**4-6 CTX-S**	**4-6CMTXSS**	420	350
6	1/4	1/2-14	7/16-20	4.4	13.5	31	37	22.0	30	**4-8 CTX-S**	**4-8CMTXSS**	420	350
8	5/16	1/8-27	1/2-20	6.0	4.8	24	20	14.0	29	**5 CTX-S**	**5CMTXSS**	420	350
8	5/16	1/4-18	1/2-20	6.0	7.2	27	28	14.0	42	**5-4 CTX-S**	**5-4CMTXSS**	420	350
8	5/16	3/8-18	1/2-20	6.0	10.3	29	31	19.0	45	**5-6 CTX-S**	**5-6CMTXSS**	420	350
10	3/8	1/4-18	9/16-18	7.5	7.0	27	28	14.0	45	**6CMTXS**	**6CMTXSS**	420	350
10	3/8	1/8-27	9/16-18	7.5	4.8	27	23	14.0	55	**6-2 CTX-S**	**6-2CMTXSS**	420	350
10	3/8	3/8-18	9/16-18	7.5	10.0	29	31	19.0	76	**6-6CMTXS**	**6-6CMTXSS**	420	350
10	3/8	1/2-14	9/16-18	7.5	13.5	31	37	22.0	117	**6-8CMTXS**	**6-8CMTXSS**	420	350
12	1/2	3/8-18	3/4-16	9.9	10.0	32	31	19.0	86	**8CMTXS**	**8CMTXSS**	420	350
12	1/2	1/4-18	3/4-16	9.9	7.0	32	31	19.0	82	**8-4CMTXS**	**8-4CMTXSS**	420	350
12	1/2	1/2-14	3/4-16	9.9	13.5	34	37	22.0	125	**8-8CMTXS**	**8-8CMTXSS**	420	350
12	1/2	3/4-14	3/4-16	9.9	18.3	36	40	27.0	190	**8-12 CTX-S**	**8-12CMTXSS**	280	280
14, 15,16	5/8	1/2-14	7/8-14	12.3	13.5	37	37	22.0	129	**10CMTXS**	**10CMTXSS**	350	350
14, 15,16	5/8	3/8-18	7/8-14	12.3	10.3	37	33	22.0	127	**10-6 CTX-S**	**10-6CMTXSS**	350	350
14, 15,16	5/8	3/4-14	7/8-14	12.3	18.0	39	40	27.0	192	**10-12CMTXS**	**10-12CMTXSS**	280	280
18, 20	3/4	3/4-14	1 1/16-12	15.5	18.3	42	40	27.0	198	**12 CTX-S**	**12CMTXSS**	280	280
18, 20	3/4	1/2-14	1 1/16-12	15.5	13.5	42	40	27.0	204	**12-8 CTX-S**	**12-8CMTXSS**	350	350
18, 20	3/4	1-11.5	1 1/16-12	15.5	23.8	45	50	33.0	318	**12-16CMTXS**	**12-16CMTXSS**	210	210
22	7/8	3/4-14	1 3/16-12	18.3	18.3	46	48	33.4	260	**14 CTX-S**	**14CMTXSS**	280	245
25	1	1-11.5	1 5/16-12	21.5	23.8	46	50	33.4	328	**16 CTX-S**	**16CMTXSS**	210	210
25	1	3/4-14	1 5/16-12	21.5	18.3	46	45	33.4	318	**16-12 CTX-S**	**16-12CMTXSS**	280	280
25	1	1 1/4-11.5	1 5/16-12	21.5	31.8	51	61	41.0	477	**16-20 CTX-S**	**16-20CMTXSS**	170	170
28, 30, 32	1 1/4	1 1/4-11.5	1 5/8-12	27.4	31.8	52	61	41.0	549	**20 CTX-S**	**20CMTXSS**	170	170
28, 30, 32	1 1/4	1-11.5	1 5/8-12	27.4	24.0	52	60	41.0	536	**20-16CMTXS**	**20-16CMTXSS**	210	210
28, 30, 32	1 1/4	1 1/2-11.5	1 5/8-12	27.4	38.0	56	67	48.0	630	**20-24 CTX-S**	**20-24CMTXSS**	170	140
35, 38	1 1/2	1 1/2-11.5	1 7/8-12	33.3	38.0	59	67	48.0	747	**24 CTX-S**	**24CMTXSS**	170	140
35, 38	1 1/2	1 1/4-11.5	1 7/8-12	33.3	31.8	59	57	48.0	715	**24-20 CTX-S**	**24-20CMTXSS**	170	140
	2	2-11.5	2 1/2-12	45.2	49.2	78	76	64.0	1644	**32 CTX-S**		140	—
	2	1 1/2-11.5	2 1/2-12	45.2	38.0	78	75	64.0	1450	**32-24 CTX-S**		140	—

Order codes shown are part of our current manufacturing programme.

Imperial and metric parts may vary in hexagon dimensions.

$\frac{\text{PN (bar)}}{10}$ = PN (MPa)

Do not create drawings from these dimensions, they are subject to change and ISO manufacturing allowances.

CCTX Extended male stud elbow

Triple-Lok® 37° Flare end / Male NPTF* thread (SAE 476)
SAE 070202 MS51504
*Stainless Steel = NPT to prevent galling

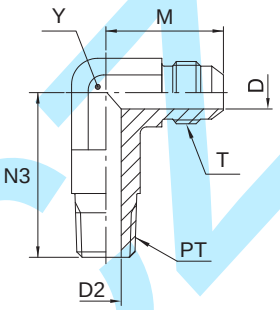

Tube O.D. mm	Tube O.D. in.	Thread NPT/NPTF PT	Thread UN/UNF-2A T	D mm	D2 mm	M mm	N3 mm	Y mm	Weight (steel) g/1 piece	Triple-Lok® Steel	Triple-Lok® Stainless Steel	PN (bar) S	PN (bar) SS
6	1/4	1/8-27	7/16-20	4.4	4.8	23	30	11.0	28	**4 CCTX-S**	**4 CCTX-SS**	420	350
6	1/4	1/4-18	7/16-20	4.4	7.0	27	40	14.0	28	**4-4 CCTX-S**	**4-4 CCTX-SS**	420	350
8	5/16	1/8-27	1/2-20	6.0	4.8	24	30	14.0	35	**5 CCTX-S**	**5 CCTX-SS**	420	350
10	3/8	1/4-18	9/16-18	7.5	7.2	27	40	14.0	58	**6 CCTX-S**	**6 CCTX-SS**	420	350
10	3/8	3/8-18	9/16-18	7.5	10.3	29	46	19.0	58	**6-6 CCTX-S**	**6-6 CCTX-SS**	420	350
12	1/2	3/8-18	3/4-16	9.9	10.3	32	46	19.0	111	**8 CCTX-S**	**8 CCTX-SS**	420	350
12	1/2	1/2-14	3/4-16	9.9	13.5	34	55	22.0	136	**8-8 CCTX-S**	**8-8 CCTX-SS**	420	350
14, 15,16	5/8	1/2-14	7/8-14	12.3	13.5	37	55	22.0	183	**10 CCTX-S**	**10 CCTX-SS**	350	350
18, 20	3/4	3/4-14	1 1/16-12	15.5	18.3	42	62	26.5	253	**12 CCTX-S**	**12 CCTX-SS**	280	280
25	1	1-11.5	1 5/16-12	21.4	23.8	46	76	33.0	435	**16 CCTX-S**	**16 CCTX-SS**	210	210
28, 30, 32	1 1/4	1 1/4-11.5	1 5/8-12	27.4	31.8	52	94	41.0	1021	**20 CCTX-S**	**20 CCTX-SS**	170	170

Order codes shown are part of our current manufacturing programme.

Imperial and metric parts may vary in hexagon dimensions.

$\frac{\text{PN (bar)}}{10}$ = PN (MPa)

Do not create drawings from these dimensions, they are subject to change and ISO manufacturing allowances.

K

kovaz.cz

CCCTX Extended male stud elbow

Triple-Lok® 37° Flare end / Male NPTF* thread (SAE 476)
SAE 071602

*Stainless Steel = NPT to prevent galling

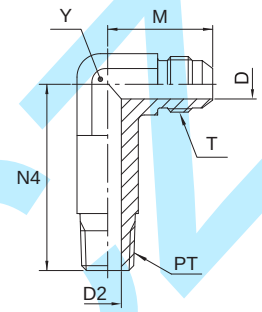

Tube O.D. mm	Tube O.D. in.	Thread NPT/NPTF PT	Thread UN/UNF-2A T	D mm	D2 mm	M mm	N4 mm	Y mm	Weight (steel) g/1 piece	Triple-Lok® Steel	PN (bar)
6	1/4	1/8-27	7/16-20	4.4	4.8	23	40	11	32	**4 CCCTX-S**	420
6	1/4	1/4-18	7/16-20	4.4	7.0	27	53	14	32	**4-4 CCCTX-S**	420
8	5/16	1/8-27	1/2-20	6.0	4.8	25	41	14	39	**5 CCCTX-S**	420
10	3/8	1/4-18	9/16-18	7.5	7.2	27	53	14	72	**6 CCCTX-S**	420
10	3/8	3/8-18	9/16-18	7.5	10.3	29	59	19	72	**6-6 CCCTX-S**	420
12	1/2	3/8-18	3/4-16	10.3	9.9	32	59	19	130	**8 CCCTX-S**	420
12	1/2	1/2-14	3/4-16	9.9	13.5	34	73	22	163	**8-8 CCCTX-S**	420
14, 15,16	5/8	1/2-14	7/8-14	12.3	13.5	37	73	22	212	**10 CCCTX-S**	350
18, 20	3/4	3/4-14	1 1/16-12	15.5	18.3	42	83	27	356	**12 CCCTX-S**	280
25	1	1-11.5	1 5/16-12	21.4	23.8	46	102	33	520	**16 CCCTX-S**	210
28, 30, 32	1 1/4	1 1/4-11.5	1 5/8-12	27.4	31.8	52	127	41	1196	**20 CCCTX-S**	170

Order codes shown are part of our current manufacturing programme.

Imperial and metric parts may vary in hexagon dimensions.

$\frac{\text{PN (bar)}}{10}$ = PN (MPa)

Do not create drawings from these dimensions, they are subject to change and ISO manufacturing allowances.

Kovalc

C3MX Male stud elbow

Triple-Lok® 37° Flare end / Male BSPT thread (ISO 7)

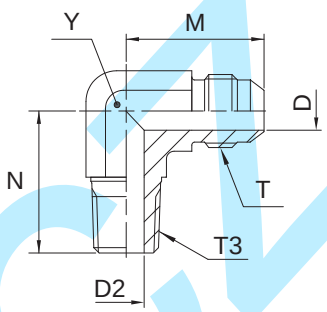

Tube O.D. mm	Tube O.D. in.	Thread BSPT T3	Thread UN/UNF-2A T	D mm	D2 mm	M mm	N mm	Y mm	Weight (steel) g/1 piece	Triple-Lok® Steel	Triple-Lok® Stainless Steel	PN (bar) S	PN (bar) SS
6	1/4	1/8-28	7/16-20	4.4	5.0	23	20	11	23	**4C3MXS**	**4C3MXSS**	315	315
6	1/4	1/4-19	7/16-20	4.4	7.0	27	28	14	42	**4-4C3MXS**	**4-4C3MXSS**	315	315
8	5/16	1/8-28	1/2-20	6.0	5.0	24	20	13	29	**5C3MXS**	**5C3MXSS**	315	315
8	5/16	1/4-19	1/2-20	6.0	7.0	27	28	14	42	**5-4C3MXS**	**5-4C3MXSS**	315	315
10	3/8	1/4-19	9/16-18	7.5	7.0	27	28	14	45	**6C3MXS**	**6C3MXSS**	315	315
10	3/8	3/8-19	9/16-18	7.5	10.0	29	31	19	76	**6-6C3MXS**	**6-6C3MXSS**	315	315
10	3/8	1/2-14	9/16-18	7.5	13.5	31	37	22	117	**6-8C3MXS**	**6-8C3MXSS**	315	315
12	1/2	3/8-19	3/4-16	9.9	10.0	32	31	19	86	**8C3MXS**	**8C3MXSS**	315	315
12	1/2	1/4-19	3/4-16	9.9	7.0	32	31	19	82	**8-4C3MXS**	**8-4C3MXSS**	315	315
12	1/2	1/2-14	3/4-16	9.9	13.5	34	37	22	125	**8-8C3MXS**	**8-8C3MXSS**	315	315
14, 15,16	5/8	1/2-14	7/8-14	12.3	13.5	37	37	22	129	**10C3MXS**	**10C3MXSS**	315	315
14, 15,16	5/8	3/8-19	7/8-14	12.3	10.3	37	33	22	127	**10-6C3MXS**	**10-6C3MXSS**	315	315
14, 15,16	5/8	3/4-14	7/8-14	12.3	18.0	39	40	27	192	**10-12C3MXS**	**10-12C3MXSS**	160	160
18, 20	3/4	3/4-14	1 1/16-12	15.5	18.0	42	40	27	198	**12C3MXS**	**12C3MXSS**	160	160
18, 20	3/4	1/2-14	1 1/16-12	15.5	13.5	42	40	27	204	**12-8C3MXS**	**12-8C3MXSS**	315	315
18, 20	3/4	1-11	1 1/16-12	15.5	24.0	45	50	33	251	**12-16C3MXS**	**12-16C3MXSS**	160	160
25	1	1-11	1 5/16-12	21.5	24.0	46	50	33	328	**16C3MXS**	**16C3MXSS**	160	160
25	1	3/4-14	1 5/16-12	21.5	18.0	46	45	33	318	**16-12C3MXS**	**16-12C3MXSS**	160	160
28, 30, 32	1 1/4	1 1/4-11	1 5/8-12	27.5	32.0	52	61	41	549	**20C3MXS**	**20C3MXSS**	160	160
28, 30, 32	1 1/4	1-11	1 5/8-12	27.5	24.0	52	60	41	536	**20-16C3MXS**	**20-16C3MXSS**	160	160
35, 38	1 1/2	1 1/2-11	1 7/8-12	33.0	38.0	59	67	48	747	**24C3MXS**	**24C3MXSS**	160	140

Order codes shown are part of our current manufacturing programme.

Imperial and metric parts may vary in hexagon dimensions.

$\frac{\text{PN (bar)}}{10}$ = PN (MPa)

Do not create drawings from these dimensions, they are subject to change and ISO manufacturing allowances.

KOVOLCZ

V87OMX 45° Male stud elbow

Triple-Lok® 37° Flare end / Male metric thread O-ring (ISO 6149)

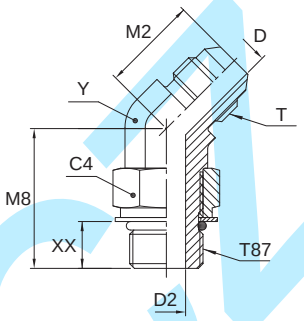

Tube O.D. mm	Tube O.D. in.	Thread Metric T87	Thread UN/UNF-2A T	C4 mm	D mm	D2 mm	M2 mm	M8 mm	XX mm	Y mm	Weight (steel) g/1 piece	Triple-Lok® Steel	PN (bar)
6	1/4	M 10×1.0	7/16-20	14	4.4	4.5	18	27	18	11	17	**4M10V87OMXS**	420
6	1/4	M 12×1.0	7/16-20	17	4.4	6.0	20	27	16	13	25	**4M12V87OMXS**	420
8	5/16	M 10×1.0	1/2-20	14	6.0	4.5	20	27	18	13	31	**5M10V87OMXS**	420
8	5/16	M 12×1.5	1/2-20	17	6.0	6.0	20	27	16	13	25	**5M12V87OMXS**	420
10	3/8	M 14×1.5	9/16-18	19	7.5	7.5	21	28	17	14	31	**6M14V87OMXS**	420
10	3/8	M 16×1.5	9/16-18	22	7.5	9.0	22	33	21	19	58	**6M16V87OMXS**	350
10	3/8	M 18×1.5	9/16-18	24	7.5	11.0	22	33	20	19	66	**6M18V87OMXS**	350
12	1/2	M 16×1.5	3/4-16	22	9.9	9.0	25	33	21	19	65	**8M16V87OMXS**	350
12	1/2	M 18×1.5	3/4-16	24	9.9	11.0	25	33	20	19	66	**8M18V87OMXS**	350
14, 15,16	5/8	M 18×1.5	7/8-14	24	12.3	11.0	28	37	24	22	99	**10M18V87OMXS**	350
14, 15,16	5/8	M 22×1.5	7/8-14	27	12.3	14.0	28	38	25	22	99	**10M22V87OMXS**	350
18, 20	3/4	M 22×1.5	1 1/16-12	27	15.5	14.0	33	40	27	27	164	**12M22V87OMXS**	350
18, 20	3/4	M 27×2.0	1 1/16-12	32	15.5	18.0	33	46	30	27	173	**12M27V87OMXS**	350
25	1	M 33×2.0	1 5/16-12	41	21.5	23.0	37	46	30	33	287	**16M33V87OMXS**	280

Steel, stainless steel and brass Triple-Lok® parts are delivered with NBR elastomeric seals as standard. For more details on other seal materials see page K92.

Order codes shown are part of our current manufacturing programme.

Imperial and metric parts may vary in hexagon dimensions.

$\frac{\text{PN (bar)}}{10} = \text{PN (MPa)}$

Do not create drawings from these dimensions, they are subject to change and ISO manufacturing allowances.

Kovak.cz

V5OMX 45° Male stud elbow

Triple-Lok® 37° Flare end / Male UNF thread O-ring (ISO 11926)
SAE 070320 MS51528

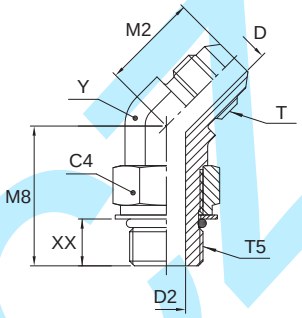

Tube O.D. mm	Tube O.D. in.	Thread UN/UNF-2A T5	Thread UN/UNF-2A T	C4 mm	D mm	D2 mm	M2 mm	M8 mm	XX mm	Y mm	Weight (steel) g/1 piece	Triple-Lok® Steel	Triple-Lok® Stainless Steel	PN (bar) S	PN (bar) SS
6	1/4	7/16-20	7/16-20	14.3	4.4	4.4	18	27	16	11.0	34	**4 V5OX-S**	**4 V5OX-SS**	420	350
8	5/16	1/2-20	1/2-20	16.0	6.0	6.0	20	27	16	14.0	42	**5 V5OX-S**	**5 V5OX-SS**	420	350
10	3/8	9/16-18	9/16-18	17.0	7.5	7.5	21	29	17	14.0	52	**6V5OMXS**	**6 V5OX-SS**	420	350
10	3/8	3/4-16	9/16-18	22.2	7.5	9.9	22	23	19	19.0	104	**6-8 V5OX-S**	**6-8 V5OX-SS**	420	350
12	1/2	3/4-16	3/4-16	22.2	9.9	9.9	25	33	19	19.0	104	**8 V5OX-S**	**8 V5OX-SS**	420	350
12	1/2	9/16-18	3/4-16	17.5	9.9	7.5	25	28	16	19.0	98	**8-6 V5OX-S**	**8-6 V5OX-SS**	420	350
12	1/2	7/8-14	3/4-16	25.4	9.9	12.3	25	39	23	22.0	148	**8-10 V5OX-S**	**8-10 V5OX-SS**	350	350
14, 15,16	5/8	7/8-14	7/8-14	25.4	12.3	12.3	28	39	23	22.0	157	**10 V5OX-S**	**10 V5OX-SS**	350	350
14, 15,16	5/8	3/4-16	7/8-14	22.2	12.3	9.9	28	35	21	22.0	157	**10-8 V5OX-S**	**10-8 V5OX-SS**	350	350
18, 20	3/4	1 1/16-12	1 1/16-12	31.8	15.5	15.5	33	44	26	27.0	258	**12 V5OX-S**	**12 V5OX-SS**	350	350
18, 20	3/4	7/8-14	1 1/16-12	25.4	15.5	12.5	33	40	25	27.0	227	**12-10 V5OX-S**	**12-10 V5OX-SS**	350	350
22	7/8	1 3/16-12	1 3/16-12	35.0	18.3	18.3	37	47	30	33.3	275	**14 V5OX-S**		280	—
25	1	1 5/16-12	1 5/16-12	38.0	21.4	21.4	37	47	30	33.3	375	**16 V5OX-S**	**16 V5OX-SS**	280	280
25	1	1 1/16-12	1 5/16-12	31.8	21.4	15.5	37	47	31	33.3	277	**16-12 V5OX-S**		280	280
28, 30, 32	1 1/4	1 5/8-12	1 5/8-12	47.6	27.4	27.4	40	49	31	41.0	570	**20 V5OX-S**	**20 V5OX-SS**	280	210
35, 38	1 1/2	1 7/8-12	1 7/8-12	54.0	33.3	33.3	45	49	31	47.6	706	**24 V5OX-S**	**24 V5OX-SS**	210	140

Steel, stainless steel and brass Triple-Lok® parts are delivered with NBR elastomeric seals as standard. For more details on other seal materials see page K92.

Order codes shown are part of our current manufacturing programme.

Imperial and metric parts may vary in hexagon dimensions.

$$\frac{\text{PN (bar)}}{10} = \text{PN (MPa)}$$

Do not create drawings from these dimensions, they are subject to change and ISO manufacturing allowances.

KOVACH

V4OMX 45° Male stud elbow

Triple-Lok® 37° Flare end / Male BSPP thread O-ring + retaining ring (ISO 1179)

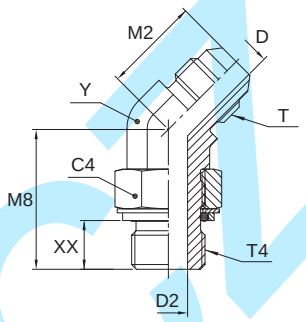

Tube O.D. mm	Tube O.D. in.	Thread BSPP T4	Thread UN/UNF-2A T	C4 mm	D mm	D2 mm	M2 mm	M8 mm	XX mm	Y mm	Weight (steel) g/1 piece	Triple-Lok® Steel	PN (bar)
6	1/4	1/8-28	7/16-20	14	4.4	4.4	18	27	18	11	35	**4V4OMXS**	250
6	1/4	1/4-19	7/16-20	19	4.4	7.5	21	29	18	14	48	**4-4V4OMXS**	250
8	5/16	1/8-28	1/2-20	14	6.0	4.4	20	27	18	13	44	**5V4OMXS**	250
8	5/16	1/4-19	1/2-20	19	6.0	7.5	21	27	15	14	51	**5-4V4OMXS**	250
10	3/8	1/4-19	9/16-18	19	7.5	7.5	21	29	18	14	55	**6V4OMXS**	250
10	3/8	3/8-19	9/16-18	22	7.5	9.9	22	33	22	19	70	**6-6V4OMXS**	250
10	3/8	1/2-14	9/16-18	27	7.5	12.3	22	39	24	22	92	**6-8V4OMXS**	250
12	1/2	3/8-19	3/4-16	22	9.9	9.9	25	33	22	19	104	**8V4OMXS**	250
12	1/2	1/2-14	3/4-16	27	9.9	12.3	25	39	24	22	148	**8-8V4OMXS**	250
14, 15,16	5/8	1/2-14	7/8-14	27	12.3	12.3	28	39	24	22	165	**10V4OMXS**	250
14, 15,16	5/8	3/4-14	7/8-14	36	12.3	15.5	30	44	29	27	235	**10-12V4OMXS**	250
18, 20	3/4	3/4-14	1 1/16-12	36	15.5	15.5	33	44	30	27	270	**12V4OMXS**	250
25	1	1-11	1 5/16-12	41	21.5	21.5	37	47	31	33	394	**16V4OMXS**	250
28, 30, 32	1 1/4	1 1/4-11	1 5/8-12	50	27.5	27.5	40	48	32	41	599	**20V4OMXS**	210
35, 38	1 1/2	1 1/2-11	1 7/8-12	55	33.0	33.0	45	48	33	48	750	**24V4OMXS**	140

Steel, stainless steel and brass Triple-Lok® parts are delivered with NBR elastomeric seals as standard. For more details on other seal materials see page K92.

Order codes shown are part of our current manufacturing programme.

Imperial and metric parts may vary in hexagon dimensions.

$$\frac{\text{PN (bar)}}{10} = \text{PN (MPa)}$$

Do not create drawings from these dimensions, they are subject to change and ISO manufacturing allowances.

V8OMX 45° Male stud elbow

Triple-Lok® 37° Flare end / Male metric thread – O-ring + retaining ring

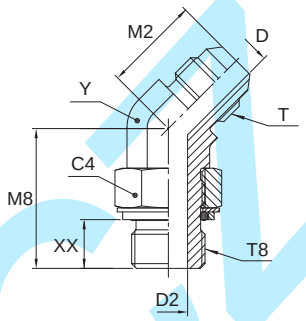

Tube O.D. mm	Tube O.D. in.	Thread Metric T8	Thread UN/UNF-2A T	C4 mm	D mm	D2 mm	M2 mm	M8 mm	XX mm	Y mm	Weight (steel) g/1 piece	Triple-Lok® Steel	PN (bar)
6	1/4	M 10×1.0	7/16-20	14	4.4	4.5	18	27	20	11	23	**4M10V8OMXS**	250
6	1/4	M 12×1.5	7/16-20	17	4.4	6.0	20	27	18	13	25	**4M12V8OMXS**	250
8	5/16	M 12×1.5	1/2-20	17	6.0	6.0	20	28	18	13	28	**5M12V8OMXS**	250
10	3/8	M 14×1.5	9/16-18	17	7.5	7.5	21	28	19	14	36	**6M14V8OMXS**	250
12	1/2	M 16×1.5	3/4-16	19	9.9	9.0	25	33	23	19	68	**8M16V8OMXS**	250
12	1/2	M 18×1.5	3/4-16	22	9.9	11.0	25	33	22	19	78	**8M18V8OMXS**	250
14, 15,16	5/8	M 22×1.5	7/8-14	27	12.3	14.0	28	38	27	22	119	**10M22V8OMXS**	250
18, 20	3/4	M 27×2.0	1 1/16-12	32	15.5	18.0	33	46	32	27	208	**12M27V8OMXS**	175
25	1	M 33×2.0	1 5/16-12	38	21.5	23.0	37	46	32	33	333	**16M33V8OMXS**	140

Steel, stainless steel and brass Triple-Lok® parts are delivered with NBR elastomeric seals as standard. For more details on other seal materials see page K92.

Order codes shown are part of our current manufacturing programme.

Imperial and metric parts may vary in hexagon dimensions.

$\frac{\text{PN (bar)}}{10}$ = PN (MPa)

Do not create drawings from these dimensions, they are subject to change and ISO manufacturing allowances.

kovaz.cz

VMTX 45° Male stud elbow

Triple-Lok® 37° Flare end / Male NPTF* thread (SAE 476)
SAE 070302 MS51508
*Stainless Steel = NPT to prevent galling

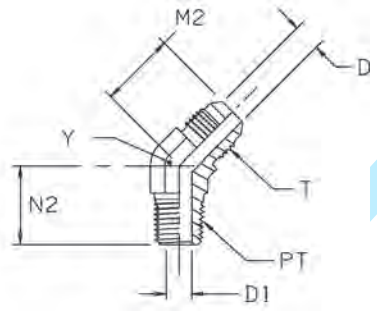

Tube O.D. mm	Tube O.D. in.	Thread NPT/NPTF PT	Thread UN/UNF-2A T	D mm	D1 mm	M2 mm	N2 mm	Y mm	Weight (steel) g/1 piece	Triple-Lok® Steel	Triple-Lok® Stainless Steel	Triple-Lok® Brass	PN (bar) S	PN (bar) SS
6	1/4	1/8-27	7/16-20	4.4	4.8	18	16	11.0	18	**4 VTX-S**	**4 VTX-SS**	**4 VTX-B**	420	350
6	1/4	1/4-18	7/16-20	4.4	7.0	21	22	14.0	30	**4-4 VTX-S**	**4-4 VTX-SS**	**4-4 VTX-B**	420	350
6	1/4	3/8-18	9/16-18	4.4	10.3	22	24	19.0	54	**4-6 VTX-S**			420	350
8	5/16	1/8-27	1/2-20	6.0	4.8	20	16	14.0	22	**5 VTX-S**	**5 VTX-SS**	**5 VTX-B**	420	350
8	5/16	1/4-18	1/2-20	6.0	7.0	21	22	14.0	31	**5-4 VTX-S**	**5-4 VTX-SS**	**5-4 VTX-B**	420	350
10	3/8	1/4-18	9/16-18	7.5	7.0	21	22	14.0	27	**6 VTX-S**	**6 VTX-SS**	**6 VTX-B**	420	350
10	3/8	1/8-27	9/16-18	7.5	4.7	21	17	14.0	23	**6-2 VTX-S**	**6-2 VTX-SS**	**6-2 VTX-B**	420	350
10	3/8	3/8-18	9/16-18	7.5	10.3	22	24	19.0	52	**6-6 VTX-S**	**6-6 VTX-SS**	**6-6 VTX-B**	420	350
10	3/8	1/2-14	9/16-18	7.5	13.5	22	30	22.0	74	**6-8 VTXS**	**6-8 VTX-SS**	**6-8 VTX-B**	420	350
12	1/2	1/4-18	3/4-16	9.9	7.0	25	24	19.0	62	**8-4 VTX-S**	**8-4 VTX-SS**	**8-4 VTX-B**	420	350
12	1/2	3/8-18	3/4-16	9.9	10.3	25	24	19.0	61	**8 VTX-S**	**8 VTX-SS**	**8 VTX-B**	420	350
12	1/2	1/2-14	3/4-16	9.9	13.5	25	30	22.0	92	**8-8 VTX-S**	**8-8 VTX-SS**	**8-8 VTX-B**	420	350
12	1/2	3/4-14	3/4-16	9.9	18.2	26	31	27.0	144	**8-12 VTX-S**	**8-12 VTX-SS**	**8-12 VTX-B**	280	280
14, 15,16	5/8	1/2-14	7/8-14	12.3	13.5	28	30	22.0	92	**10 VTX-S**	**10 VTX-SS**	**10 VTX-B**	350	350
14, 15,16	5/8	3/8-18	7/8-14	12.3	10.3	28	25	22.0	94	**10-6 VTX-S**	**10-6 VTX-SS**	**10-6 VTX-B**	350	350
14, 15,16	5/8	3/4-14	7/8-14	12.3	18.2	33	31	27.0	156	**10-12 VTX-S**	**10-12 VTX-SS**		280	280
18, 20	3/4	3/4-14	1 1/16-12	15.5	18.2	33	31	27.0	148	**12 VTX-S**	**12 VTX-SS**	**12 VTX-B**	280	280
18, 20	3/4	1/2-14	1 1/16-12	15.5	13.5	33	31	27.0	144	**12-8 VTX-S**	**12-8 VTX-SS**	**12-8 VTX-B**	350	350
18, 20	3/4	1-11.5	1 1/16-12	15.5	23.8	36	38	33.3	169	**12-16 VTX-S**	**12-16 VTX-SS**	**12-16 VTX-B**	210	210
25	1	1-11.5	1 5/16-12	21.4	23.8	37	38	33.3	239	**16 VTX-S**	**16 VTX-SS**	**16 VTX-B**	210	210
25	1	3/4-14	1 5/16-12	21.4	18.2	37	33	33.3	213	**16-12 VTX-S**	**16-12 VTX-SS**	**16-12 VTX-B**	280	280
28, 30, 32	1 1/4	1 1/4-11.5	1 5/8-12	27.4	31.8	40	42	41.0	385	**20 VTX-S**	**20 VTX-SS**	**20 VTX-B**	170	170
35, 38	1 1/2	1 1/2-11.5	1 7/8-12	33.3	38.0	45	45	47.6	495	**24 VTX-S**	**24 VTX-SS**	**24 VTX-B**	170	140
	2	2-11.5	2 1/2-12	45.0	49.0	56	54	63.5	1149	**32 VTX-S**			170	140

Order codes shown are part of our current manufacturing programme.

Imperial and metric parts may vary in hexagon dimensions.

$\frac{\text{PN (bar)}}{10}$ = PN (MPa)

Pressure ratings – PN shown, apply to Steel and Stainless Steel versions of the product.

For Brass parts reduce pressures by 35%.

Do not create drawings from these dimensions, they are subject to change and ISO manufacturing allowances.

V3MX 45° Male stud elbow

Triple-Lok® 37° Flare end / Male BSPT thread (ISO 7)

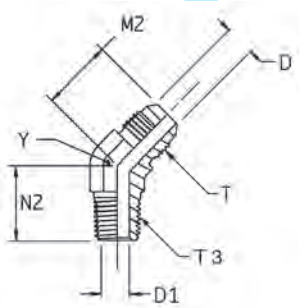

Tube O.D. mm	Tube O.D. in.	Thread BSPT T3	Thread UN/UNF-2A T	D mm	D1 mm	M2 mm	N2 mm	Y mm	Weight (steel) g/1 piece	Triple-Lok® Steel	PN (bar)
6	1/4	1/8-28	7/16-20	4.4	5.0	18	16	11	18	**4V3MXS**	315
6	1/4	1/4-19	7/16-20	4.4	7.0	21	22	14	30	**4-4V3MXS**	315
8	5/16	1/8-28	1/2-20	6.0	5.0	20	16	13	22	**5V3MXS**	315
8	5/16	1/4-19	1/2-20	6.0	7.0	21	22	14	31	**5-4V3MXS**	315
10	3/8	1/4-19	9/16-18	7.5	7.0	21	22	14	27	**6V3MXS**	315
10	3/8	3/8-19	9/16-18	7.5	10.0	22	24	19	52	**6-6V3MXS**	315
10	3/8	1/2-14	9/16-18	7.5	13.5	22	30	22	74	**6-8V3MXS**	315
12	1/2	3/8-19	3/4-16	9.9	10.0	25	24	19	61	**8V3MXS**	315
12	1/2	1/2-14	3/4-16	9.9	13.5	25	30	22	92	**8-8V3MXS**	315
14, 15,16	5/8	1/2-14	7/8-14	12.3	13.5	28	30	22	92	**10V3MXS**	315
18, 20	3/4	3/4-14	7/8-14	15.5	18.0	33	31	27	148	**12V3MXS**	160
25	1	1-11	1 5/16-12	21.5	24.0	37	38	33	239	**16V3MXS**	160
28, 30, 32	1 1/4	1 1/4-11	1 5/8-12	27.5	32.0	40	42	41	385	**20V3MXS**	160
35, 38	1 1/2	1 1/2-11	1 7/8-12	33.0	38.0	45	45	48	495	**24V3MXS**	160

Order codes shown are part of our current manufacturing programme.

Imperial and metric parts may vary in hexagon dimensions.

$\frac{\text{PN (bar)}}{10}$ = PN (MPa)

Do not create drawings from these dimensions, they are subject to change and ISO manufacturing allowances.

KOVAL

S87OMX Male stud branch tee

Triple-Lok® 37° Flare ends / Male metric thread O-ring (ISO 6149)

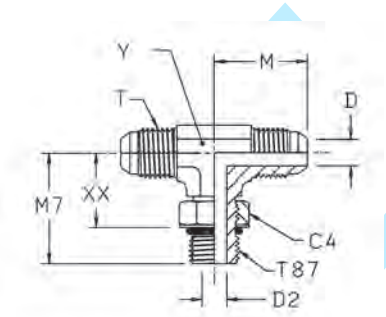

Tube O.D. mm	Tube O.D. in.	Thread Metric T87	Thread UN/UNF-2A T	C4 mm	D mm	D2 mm	M mm	M7 mm	XX mm	Y mm	Weight (steel) g/1 piece	Triple-Lok® Steel	PN (bar)
6	1/4	M 10×1.0	7/16-20	14	4.4	4.5	23	27	18	11	27	**4M10S87OMXS**	420
8	5/16	M 12×1.5	1/2-20	17	6.0	6.0	24	31	19	13	42	**5M12S87OMXS**	420
10	3/8	M 14×1.5	9/16-18	19	7.5	7.5	27	34	22	14	53	**6M14S87OMXS**	420
12	1/2	M 16×1.5	3/4-16	22	9.9	9.0	32	38	26	19	113	**8M16S87OMXS**	350
12	1/2	M 18×1.5	3/4-16	24	9.9	11.0	32	38	26	19	114	**8M18S87OMXS**	350
14, 15,16	5/8	M 18×1.5	7/8-14	24	12.3	11.0	37	42	29	22	174	**10M18S87OMXS**	350
14, 15,16	5/8	M 22×1.5	7/8-14	27	12.3	14.0	37	43	29	22	175	**10M22S87OMXS**	350
18, 20	3/4	M 22×1.5	1 1/16-12	27	15.5	14.0	42	45	32	27	295	**12M22S87OMXS**	350
18, 20	3/4	M 27×2.0	1 1/16-12	32	15.5	18.0	42	51	35	27	304	**12M27S87OMXS**	350
25	1	M 33×2.0	1 5/16-12	41	21.5	23.0	46	53	38	33	530	**16M33S87OMXS**	280

Steel, stainless steel and brass Triple-Lok® parts are delivered with NBR elastomeric seals as standard. For more details on other seal materials see page K92.

Order codes shown are part of our current manufacturing programme.

Imperial and metric parts may vary in hexagon dimensions.

$\frac{\text{PN (bar)}}{10} = \text{PN (MPa)}$

Do not create drawings from these dimensions, they are subject to change and ISO manufacturing allowances.

Kovar

S5OMX Male stud branch tee

Triple-Lok® 37° Flare ends / Male UNF thread O-ring (ISO 11926)
SAE 070429 MS51529

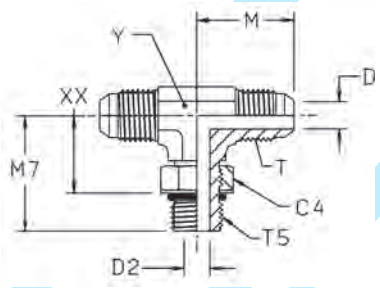

Tube O.D. mm	Tube O.D. in.	Thread UN/UNF-2A T5	Thread UN/UNF-2A T	C4 mm	D mm	D2 mm	M mm	M7 mm	XX mm	Y mm	Weight (steel) g/1 piece	Triple-Lok® Steel	Triple-Lok® Stainless Steel	PN (bar) S	PN (bar) SS
6	1/4	7/16-20	7/16-20	14.3	4.4	4.4	23	26	15	11.0	46	**4 S50X-S**	**4 S50X-SS**	420	350
8	5/16	1/2-20	1/2-20	16.0	5.8	5.8	24	29	18	14.0	66	**5 S50X-S**	**5 S50X-SS**	420	350
10	3/8	9/16-18	9/16-18	17.5	7.5	7.5	27	32	20	14.0	76	**6 S50X-S**	**6 S50X-SS**	420	350
12	1/2	3/4-16	3/4-16	22.0	9.9	10.0	32	37	23	19.0	150	**8S50MXS**	**8 S50X-SS**	420	350
14, 15,16	5/8	7/8-14	7/8-14	27.0	12.3	12.5	37	43	28	22.0	224	**10S50MXS**	**10 S50X-SS**	350	350
18, 20	3/4	1 1/16-12	1 1/16-12	31.8	15.5	15.5	42	49	31	27.0	367	**12 S50X-S**	**12 S50X-SS**	350	350
25	1	1 5/16-12	1 5/16-12	38.0	21.4	21.4	46	52	34	33.3	506	**16 S50X-S**	**16 S50X-SS**	280	280
28, 30, 32	1 1/4	1 5/8-12	1 5/8-12	47.6	27.4	27.4	52	57	40	41.0	1053	**20 S50X-S**	**20 S50X-SS**	280	280
35, 38	1 1/2	1 7/8-12	1 7/8-12	54.0	33.3	33.3	59	61	43	47.6	1296	**24 S50X-S**		210	—
	2	2 1/2-12	2 1/2-12	69.8	45.2	45.2	78	73	56	63.5	2000	**32 S50X-S**		140	—

Steel, stainless steel and brass Triple-Lok® parts are delivered with NBR elastomeric seals as standard. For more details on other seal materials see page K92.

Order codes shown are part of our current manufacturing programme.

Imperial and metric parts may vary in hexagon dimensions.

$\frac{\text{PN (bar)}}{10} = \text{PN (MPa)}$

Do not create drawings from these dimensions, they are subject to change and ISO manufacturing allowances.

K

S4OMX Male stud branch tee

Triple-Lok® 37° Flare end / Adjustable BSPP thread O-ring + retaining ring (ISO 1179)

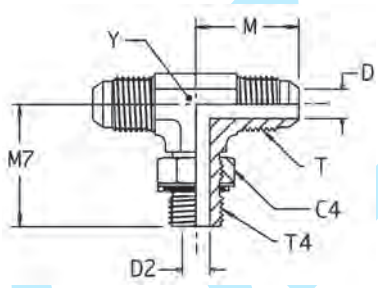

Tube O.D. mm	Tube O.D. in.	Thread BSPP T4	Thread UN/UNF-2A T	C4 mm	D mm	D2 mm	M mm	M7 mm	XX mm	Y mm	Weight (steel) g/1 piece	Triple-Lok® Steel	Triple-Lok® Stainless Steel	PN (bar) S	PN (bar) SS
6	1/4	1/8-28	7/16-20	14	4.4	4.4	23	27	17	11	47	**4S4OMXS**	**4S4OMXSS**	250	250
10	3/8	1/4-19	9/16-18	19	7.5	7.5	27	32	19	14	78	**6S4OMXS**	**6S4OMXSS**	250	200
12	1/2	3/8-19	3/4-16	22	9.9	10.0	32	37	24	19	154	**8S4OMXS**	**8S4OMXSS**	250	200
12	1/2	1/2-14	3/4-16	27	9.9	12.3	34	44	28	22	186	**8-8-8S4OMXS**	**8-8-8S4OMXSS**	250	200
14, 15,16	5/8	1/2-14	7/8-14	27	12.3	12.3	37	43	27	22	231	**10S4OMXS**	**10S4OMXSS**	250	200
18, 20	3/4	3/4-14	1 1/16-12	36	15.5	15.5	42	50	34	27	379	**12S4OMXS**	**12S4OMXSS**	250	200
25	1	1-11	1 5/16-12	41	21.5	21.5	46	52	35	33	569	**16S4OMXS**	**16S4OMXSS**	250	200
28, 30, 32	1 1/4	1 1/4-11	1 5/8-12	50	27.5	27.5	52	57	39	41	1075	**20S4OMXS**	**20S4OMXSS**	210	160

Steel, stainless steel and brass Triple-Lok® parts are delivered with NBR elastomeric seals as standard. For more details on other seal materials see page K92.

Order codes shown are part of our current manufacturing programme.

Imperial and metric parts may vary in hexagon dimensions.

$\frac{\text{PN (bar)}}{10}$ = PN (MPa)

Do not create drawings from these dimensions, they are subject to change and ISO manufacturing allowances.

Kovaz

S8OMX Male stud branch tee

Triple-Lok® 37° Flare ends / Male metric thread – O-ring + retaining ring

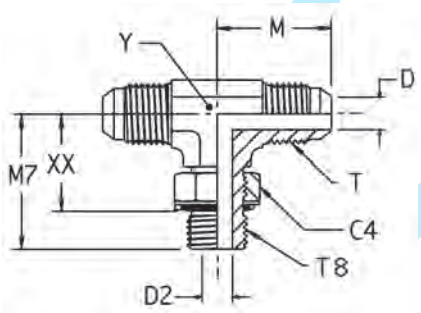

Tube O.D. mm	Tube O.D. in.	Thread Metric T8	Thread UN/UNF-2A T	C4 mm	D mm	D2 mm	M mm	M7 mm	XX mm	Y mm	Weight (steel) g/1 piece	Triple-Lok® Steel	PN (bar)
6	1/4	M 10×1.0	7/16-20	14	4.4	4.5	23	27	18	11	27	**4M10S8OMXS**	250
8	5/16	M 12×1.5	1/2-20	17	6.0	6.0	24	31	19	13	42	**5M12S8OMXS**	250
10	3/8	M 14×1.5	9/16-18	17	7.5	7.5	27	34	22	14	53	**6M14S8OMXS**	250
12	1/2	M 16×1.5	3/4-16	19	9.9	9.0	32	38	26	19	95	**8M16S8OMXS**	250
12	1/2	M 18×1.5	3/4-16	22	9.9	11.0	32	38	26	19	114	**8M18S8OMXS**	250
14, 15,16	5/8	M 22×1.5	7/8-14	27	12.3	14.0	37	43	30	22	175	**10M22S8OMXS**	250
18, 20	3/4	M 27×2.0	1 1/16-12	32	15.5	18.0	42	51	35	27	304	**12M27S8OMXS**	175
25	1	M 33×2.0	1 5/16-12	38	21.5	23.0	46	53	37	33	491	**16M33S8OMXS**	140

Steel, stainless steel and brass Triple-Lok® parts are delivered with NBR elastomeric seals as standard. For more details on other seal materials see page K92.

Order codes shown are part of our current manufacturing programme.

Imperial and metric parts may vary in hexagon dimensions.

$\frac{\text{PN (bar)}}{10}$ = PN (MPa)

Do not create drawings from these dimensions, they are subject to change and ISO manufacturing allowances.

K

SMTX Male stud branch tee

Triple-Lok® 37° Flare ends / Male NPTF* thread (SAE 476)
SAE 070425 MS51512
*Stainless Steel = NPT to prevent galling

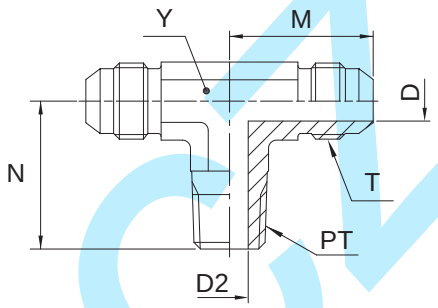

Tube O.D. mm	Tube O.D. in.	Thread NPT/NPTF PT	Thread UN/UNF-2A T	D mm	D2 mm	M mm	N mm	Y mm	Weight (steel) g/1 piece	Triple-Lok® Steel	Triple-Lok® Stainless Steel	Triple-Lok® Brass	PN (bar) S	PN (bar) SS
	3/16	1/8-27	3/8-24	3.0	4.7	21	18	11.0	25	**3 STX-S**	**3 STX-SS**	**3 STX-B**	420	350
6	1/4	1/8-27	7/16-20	4.4	4.7	23	20	11.0	31	**4 STX-S**	**4 STX-SS**	**4 STX-B**	420	350
6	1/4	1/4-18	7/16-20	4.4	7.0	27	28	14.0	49	**4-4-4 STX-S**	**4-4-4 STX-SS**	**4-4-4 STX-B**	420	350
8	5/16	1/8-27	1/2-20	6.0	4.7	25	21	14.0	37	**5 STX-S**	**5 STX-SS**	**5 STX-B**	420	350
10	3/8	1/4-18	9/16-18	7.5	7.0	27	28	14.0	57	**6 STX-S**	**6 STX-SS**	**6 STX-B**	420	350
10	3/8	3/8-18	9/16-18	7.5	10.3	29	31	19.0	77	**6-6-6 STX-S**	**6-6-6 STX-SS**	**6-6-6 STX-B**	420	350
12	1/2	3/8-18	3/4-16	9.9	10.3	32	31	19.0	113	**8 STX-S**	**8 STX-SS**	**8 STX-B**	420	350
12	1/2	1/2-14	3/4-16	9.9	13.5	34	37	22.0	164	**8-8-8 STX-S**	**8-8-8 STX-SS**	**8-8-8 STX-B**	420	350
14, 15,16	5/8	1/2-14	7/8-14	12.3	13.5	37	37	22.0	173	**10 STX-S**	**10 STX-SS**	**10 STX-B**	350	350
18, 20	3/4	3/4-14	1 1/16-12	18.0	18.3	42	40	27.0	272	**12 STX-S**	**12 STX-SS**	**12 STX-B**	280	280
22	7/8	3/4-14	1 3/16-12	18.3	18.3	46	43	33.3	323	**14 STX-S**			280	—
25	1	1-11.5	1 5/16-12	21.4	23.8	46	50	33.3	413	**16 STX-S**	**16 STX-SS**	**16 STX-B**	210	210
28, 30, 32	1 1/4	1 1/4-11.5	1 5/8-12	27.4	31.8	52	60	41.0	681	**20 STX-S**	**20 STX-SS**	**20 STX-B**	170	170
	2	1 1/2-11.5	1 7/8-12	33.3	38.0	59	67	47.6	905	**24 STX-S**	**24 STX-SS**	**24 STX-B**	170	170

Order codes shown are part of our current manufacturing programme.

Imperial and metric parts may vary in hexagon dimensions.

$\frac{\text{PN (bar)}}{10}$ = PN (MPa)

Pressure ratings – PN shown, apply to Steel and Stainless Steel versions of the product.

For Brass parts reduce pressures by 35 %.

Do not create drawings from these dimensions, they are subject to change and ISO manufacturing allowances.

KOVAL

S3MX Male stud branch tee

Triple-Lok® 37° Flare ends / Male BSPT thread (ISO 7)

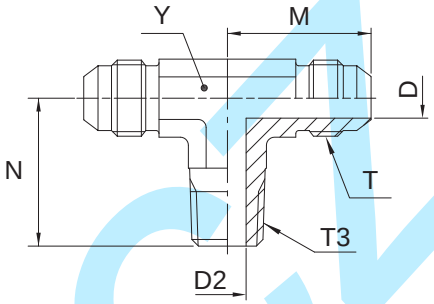

Tube O.D. mm	Tube O.D. in.	Thread BSPT T3	Thread UN/UNF-2A T	D mm	D2 mm	M mm	N mm	Y mm	Weight (steel) g/1 piece	Triple-Lok® Steel	Triple-Lok® Stainless Steel	PN (bar) S	PN (bar) SS
6	1/4	1/8-28	7/16-20	4.4	5.0	23	20	11	30	**4S3MXS**	**4S3MXSS**	315	315
10	3/8	1/4-19	7/16-20	7.5	7.0	27	28	14	55	**6S3MXS**	**6S3MXSS**	315	315
12	1/2	3/8-19	3/4-16	9.9	10.0	32	31	19	111	**8S3MXS**	**8S3MXSS**	315	315
14, 15,16	5/8	1/2-14	7/8-14	12.3	13.5	37	37	22	169	**10S3MXS**	**10S3MXSS**	315	315
18, 20	3/4	3/4-14	1 1/16-12	15.5	18.0	42	40	27	267	**12S3MXS**	**12S3MXSS**	160	160
25	1	1-11	1 5/16-12	21.5	24.0	46	50	33	407	**16S3MXS**	**16S3MXSS**	160	160

Order codes shown are part of our current manufacturing programme.

Imperial and metric parts may vary in hexagon dimensions.

$\frac{\text{PN (bar)}}{10}$ = PN (MPa)

Do not create drawings from these dimensions, they are subject to change and ISO manufacturing allowances.

K

kovaz.cz

R87OMX Male stud run tee

Triple-Lok® 37° Flare ends / Male metric thread – O-ring (ISO 6149)

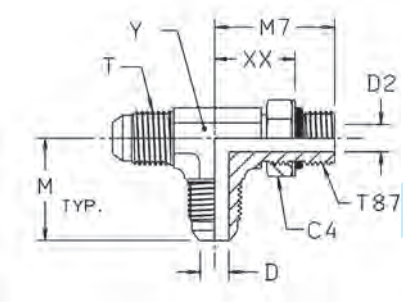

Tube O.D. mm	Tube O.D. in.	Thread Metric T87	Thread UN/UNF-2A T	C4 mm	D mm	D2 mm	M mm	M7 mm	XX mm	Y mm	Weight (steel) g/1 piece	Triple-Lok® Steel	PN (bar)
6	1/4	M 10×1.0	7/16-20	14	4.4	4.5	23	27	18	11	27	**4M10R87OMXS**	420
10	3/8	M 14×1.5	9/16-18	19	7.5	7.5	27	34	22	14	53	**6M14R87OMXS**	420
12	1/2	M 16×1.5	3/4-16	22	9.9	9.0	32	38	26	19	113	**8M16R87OMXS**	350
12	1/2	M 18×1.5	3/4-16	24	9.9	11.0	32	38	26	19	114	**8M18R87OMXS**	350
14, 15,16	5/8	M 18×1.5	7/8-14	24	12.3	11.0	37	42	29	22	174	**10M18R87OMXS**	350
14, 15,16	5/8	M 22×1.5	7/8-14	27	12.3	14.0	37	43	29	22	175	**10M22R87OMXS**	350
18, 20	3/4	M 27×2.0	1 1/16-12	32	15.5	18.0	42	51	35	27	315	**12M27R87OMXS**	350
25	1	M 33×2.0	1 5/16-12	41	22.5	23.0	46	53	38	33	495	**16M33R87OMXS**	280

Steel, stainless steel and brass Triple-Lok® parts are delivered with NBR elastomeric seals as standard. For more details on other seal materials see page K92.

Order codes shown are part of our current manufacturing programme.

Imperial and metric parts may vary in hexagon dimensions.

$\frac{\text{PN (bar)}}{10}$ = PN (MPa)

Do not create drawings from these dimensions, they are subject to change and ISO manufacturing allowances.

Kovaz

R5OMX Male stud run tee

Triple-Lok® 37° Flare ends / Male UNF thread O-ring (ISO 11926)
SAE 070428 MS51530

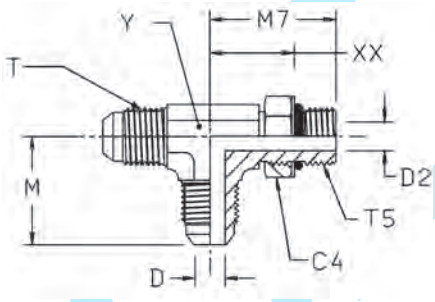

Tube O.D. mm	in.	Thread UN/UNF-2A T5	Thread UN/UNF-2A T	C4 mm	D mm	D2 mm	M mm	M7 mm	XX mm	Y mm	Weight (steel) g/1 piece	Triple-Lok® Steel	Triple-Lok® Stainless Steel	PN (bar) S	PN (bar) SS
6	1/4	7/16-20	7/16-20	14.0	4.4	4.4	23	26	16	11.0	46	**4 R5OX-S**	**4 R5OX-SS**	420	350
8	5/16	1/2-20	1/2-20	16.0	6.0	6.0	24	29	18	14.0	66	**5 R5OX-S**	**5 R5OX-SS**	420	350
10	3/8	9/16-18	9/16-18	17.5	7.5	7.5	27	32	20	14.0	76	**6 R5OX-S**	**6 R5OX-SS**	420	350
12	1/2	3/4-16	3/4-16	22.2	9.9	10.0	32	37	23	19.0	151	**8 R5OX-S**	**8 R5OX-SS**	420	350
14, 15,16	5/8	7/8-14	7/8-14	25.0	12.3	12.3	37	43	28	22.0	226	**10 R5OX-S**	**10 R5OX-SS**	350	350
18, 20	3/4	1 1/16-12	1 1/16-12	32.0	15.5	15.5	42	49	32	27.0	372	**12 R5OX-S**	**12 R5OX-SS**	350	350
25	1	1 5/16-12	1 5/16-12	38.0	21.4	21.4	46	52	35	33.3	557	**16 R5OX-S**	**16 R5OX-SS**	280	280
28, 30, 32	1 1/4	1 5/8-12	1 5/8-12	48.0	27.4	27.4	52	57	40	41.0	1053	**20 R5OX-S**	**20 R5OX-SS**	280	280
35, 38	1 1/2	1 7/8-12	1 7/8-12	54.0	33.3	33.3	59	61	43	47.6	1296	**24 R5OX-S**	**24 R5OX-SS**	210	210
	2	2 1/2-12	2 1/2-12	70.0	45.2	45.2	78	73	56	66.0	2000	**32 R5OX-S**	**32 R5OX-SS**	140	140

Steel, stainless steel and brass Triple-Lok® parts are delivered with NBR elastomeric seals as standard. For more details on other seal materials see page K92.

Order codes shown are part of our current manufacturing programme.

Imperial and metric parts may vary in hexagon dimensions.

$\frac{\text{PN (bar)}}{10} = \text{PN (MPa)}$

Do not create drawings from these dimensions, they are subject to change and ISO manufacturing allowances.

Kovai

R4OMX Male stud run tee

Triple-Lok® 37° Flare end / Adjustable BSPP thread O-ring + retaining ring (ISO 1179)

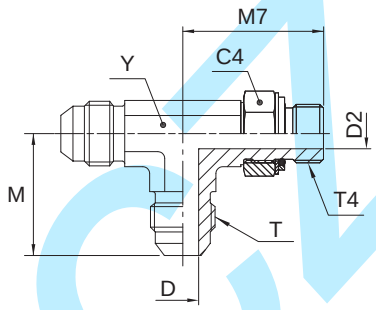

Tube O.D. mm	Tube O.D. in.	Thread BSPP T4	Thread UN/UNF-2A T	C4 mm	D mm	D2 mm	M mm	M7 mm	XX mm	Y mm	Weight (steel) g/1 piece	Triple-Lok® Steel	Triple-Lok® Stainless Steel	PN (bar) S	PN (bar) SS
6	1/4	1/8-28	7/16-20	14	4.4	4.4	23	27	17	11	47	**4R4OMXS**	**4R4OMXSS**	250	200
10	3/8	1/4-19	9/16-18	19	7.5	7.5	27	32	19	14	78	**6R4OMXS**	**6R4OMXSS**	250	200
12	1/2	3/8-19	3/4-16	22	9.9	9.9	32	37	24	19	154	**8R4OMXS**	**8R4OMXSS**	250	200
14, 15,16	5/8	1/2-14	7/8-14	27	12.3	12.3	37	43	27	22	231	**10R4OMXS**	**10R4OMXSS**	250	200
18, 20	3/4	3/4-14	1 1/16-12	36	15.5	15.5	42	50	34	27	379	**12R4OMXS**	**12R4OMXSS**	250	200
25	1	1-11	1 5/16-12	41	21.5	21.5	46	52	34	33	569	**16R4OMXS**	**16R4OMXSS**	250	200
28, 30, 32	1 1/4	1 1/4-11	1 5/8-12	50							1075	**20R4OMXS**	**20R4OMXSS**	210	160

Steel, stainless steel and brass Triple-Lok® parts are delivered with NBR elastomeric seals as standard. For more details on other seal materials see page K92.

Order codes shown are part of our current manufacturing programme.

Imperial and metric parts may vary in hexagon dimensions.

$\frac{\text{PN (bar)}}{10}$ = PN (MPa)

Do not create drawings from these dimensions, they are subject to change and ISO manufacturing allowances.

Kovaz

R8OMX Male stud run tee

Triple-Lok® 37° Flare ends / Male metric thread – O-ring + retaining ring

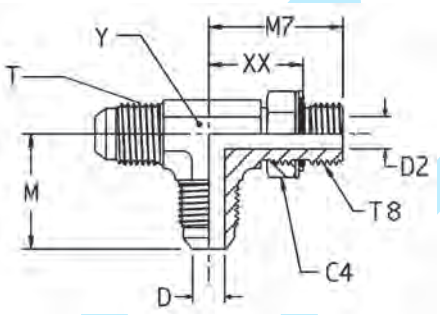

Tube O.D. mm	Tube O.D. in.	Thread Metric T8	Thread UN/UNF-2A T	C4 mm	D mm	D2 mm	M mm	M7 mm	XX mm	Y mm	Weight (steel) g/1 piece	Triple-Lok® Steel	PN (bar)
6	1/4	M 10×1.0	7/16-20	14	4.4	4.5	23	27	18	11	27	**4M10R8OMXS**	250
8	5/16	M 12×1.5	1/2-20	17	6.0	6.0	24	31	20	13	42	**5M12R8OMXS**	250
10	3/8	M 14×1.5	9/16-18	17	7.5	7.5	27	34	23	14	53	**6M14R8OMXS**	250
12	1/2	M 16×1.5	3/4-16	19	9.9	9.0	32	38	27	19	95	**8M16R8OMXS**	250
12	1/2	M 18×1.5	3/4-16	22	9.9	9.9	32	38	26	19	114	**8M18R8OMXS**	250
14, 15,16	5/8	M 22×1.5	7/8-14	27	12.3	14.0	37	43	29	22	175	**10M22R8OMXS**	250
18, 20	3/4	M 27×2.0	1 1/16-12	32	15.5	18.0	42	51	35	27	304	**12M27R8OMXS**	175
25	1	M 33×2.0	1 5/16-12	38	22.5	23.0	46	53	38	33	491	**16M33R8OMXS**	140

Steel, stainless steel and brass Triple-Lok® parts are delivered with NBR elastomeric seals as standard. For more details on other seal materials see page K92.

Order codes shown are part of our current manufacturing programme.

Imperial and metric parts may vary in hexagon dimensions.

$\frac{\text{PN (bar)}}{10}$ = PN (MPa)

Do not create drawings from these dimensions, they are subject to change and ISO manufacturing allowances.

RMTX Male stud run tee

Triple-Lok® 37° Flare ends / Male NPTF* thread (SAE 476)
SAE 070424 MS51511
*Stainless Steel = NPT to prevent galling

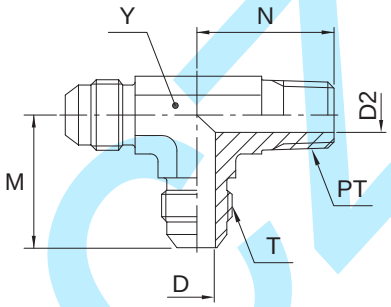

Tube O.D. mm	Tube O.D. in.	Thread NPT/NPTF PT	Thread UN/UNF-2A T	D mm	D2 mm	M mm	N mm	Y mm	Weight (steel) g/1 piece	Triple-Lok® Steel	Triple-Lok® Stainless Steel	Triple-Lok® Brass	PN (bar) S	PN (bar) SS
	3/16	1/8-27	3/8-24	3.2	4.7	21	18	11.0	25	**3 RTX-S**	**3 RTX-SS**		420	350
6	1/4	1/8-27	7/16-20	4.4	4.7	23	20	11.0	31	**4 RTX-S**	**4 RTX-SS**	**4 RTX-B**	420	350
6	1/4	1/4-18	7/16-20	4.4	7.0	27	28	14.0	49	**4-4-4 RTX-S**	**4-4-4 RTX-SS**	**4-4-4 RTX-B**	420	350
8	5/16	1/8-27	1/2-20	6.0	4.7	24	20	14.0	37	**5 RTX-S**	**5 RTX-SS**	**5 RTX-B**	420	350
10	3/8	1/4-18	9/16-18	7.5	7.0	27	28	14.0	57	**6 RTX-S**	**6 RTX-SS**	**6 RTX-B**	420	350
10	3/8	3/8-18	9/16-18	7.5	10.3	29	31	19.0	77	**6-6-6 RTX-S**	**6-6-6 RTX-SS**	**6-6-6 RTX-B**	420	350
12	1/2	3/8-18	3/4-16	9.9	10.3	32	31	19.0	109	**8 RTX-S**	**8 RTX-SS**	**8 RTX-B**	420	350
12	1/2	1/2-14	3/4-16	9.9	13.5	34	37	22.0	163	**8-8-8 RTX-S**	**8-8-8 RTX-SS**	**8-8-8 RTX-B**	420	350
14, 15,16	5/8	1/2-14	7/8-14	12.3	13.5	37	37	22.0	172	**10 RTX-S**	**10 RTX-SS**	**10 RTX-B**	350	350
18, 20	3/4	3/4-14	1 1/16-12	15.5	18.3	42	40	27.0	268	**12 RTX-S**	**12 RTX-SS**	**12 RTX-B**	280	280
22	7/8	3/4-14	1 3/16-12	18.3	18.3	46	43	33.3	323	**14 RTX-S**			280	—
25	1	1-11.5	1 5/16-12	21.4	23.8	46	50	33.3	413	**16 RTX-S**	**16 RTX-SS**	**16 RTX-B**	210	210
28, 30, 32	1 1/4	1 1/4-11.5	1 5/8-12	27.4	31.8	52	60	41.0	681	**20 RTX-S**	**20 RTX-SS**	**20 RTX-B**	170	170
35, 38	1 1/2	1 1/2-11.5	1 7/8-12	33.3	38.0	59	67	47.6	905	**24 RTX-S**	**24 RTX-SS**		170	140

Order codes shown are part of our current manufacturing programme.

Imperial and metric parts may vary in hexagon dimensions.

$\frac{\text{PN (bar)}}{10}$ = PN (MPa)

Pressure ratings – PN shown, apply to Steel and Stainless Steel versions of the product.

For Brass parts reduce pressures by 35 %.

Do not create drawings from these dimensions, they are subject to change and ISO manufacturing allowances.

R3MX Male stud run tee

Triple-Lok® 37° Flare ends / Male BSPT thread (ISO 7)

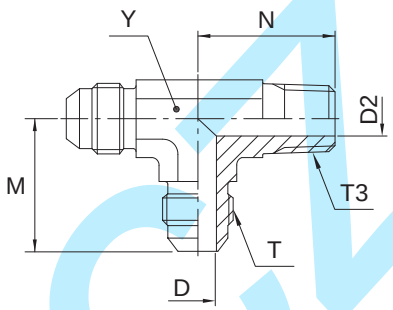

Tube O.D. mm	Tube O.D. in.	Thread BSPT T3	Thread UN/UNF-2A T	D mm	D2 mm	M mm	N mm	Y mm	Weight (steel) g/1 piece	Triple-Lok® Steel	Triple-Lok® Stainless Steel	PN (bar) S	PN (bar) SS
6	1/4	1/8-28	7/16-20	4.4	5.0	23	20	11	30	**4R3MXS**	**4R3MXSS**	315	315
8	5/16	1/8-28	1/2-20	6.0	5.0	24	20	13	36	**5R3MXS**	**5R3MXSS**	315	315
10	3/8	1/4-19	9/16-18	7.5	7.0	27	28	14	55	**6R3MXS**	**6R3MXSS**	315	315
12	1/2	3/8-19	3/4-16	9.9	10.0	32	31	19	107	**8R3MXS**	**8R3MXSS**	315	315
14, 15,16	5/8	1/2-14	7/8-14	12.3	13.5	37	37	22	170	**10R3MXS**	**10R3MXSS**	315	315

Order codes shown are part of our current manufacturing programme.

Imperial and metric parts may vary in hexagon dimensions.

$\frac{\text{PN (bar)}}{10}$ = PN (MPa)

Do not create drawings from these dimensions, they are subject to change and ISO manufacturing allowances.

K

kovaz.cz

G4MX Female connector

Triple-Lok® 37° Flare end / Female BSPP thread (ISO 1179-1)

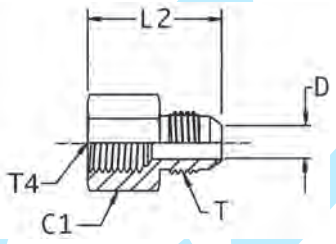

Tube O.D. mm	Tube O.D. in.	Thread BSPP T4	Thread UN/UNF-2A T	C1 mm	D mm	L2 mm	Weight (steel) g/1 piece	Triple-Lok® Steel	Triple-Lok® Stainless Steel	PN (bar) S	PN (bar) SS
6	1/4	1/8-28	7/16-20	17	4.4	30	15	**4G4MXS**	**4G4MXSS**	315	315
6	1/4	1/4-19	7/16-20	19	4.4	35	42	**4-4G4MXS**	**4-4G4MXSS**	400	350
8	5/16	1/8-28	1/2-20	17	6.0	30	22	**5G4MXS**	**5G4MXSS**	315	315
8	5/16	1/4-19	1/2-20	19	6.0	35	40	**5-4G4MXS**	**5-4G4MXSS**	400	350
10	3/8	1/4-19	9/16-18	19	7.5	36	40	**6G4MXS**	**6G4MXSS**	400	350
10	3/8	3/8-19	9/16-18	22	7.5	37	50	**6-6G4MXS**	**6-6G4MXSS**	350	350
12	1/2	3/8-19	3/4-16	22	9.9	40	64	**8G4MXS**	**8G4MXSS**	350	350
12	1/2	1/2-14	3/4-16	30	9.9	46	116	**8-8G4MXS**	**8-8G4MXSS**	400	350
14, 15,16	5/8	1/2-14	7/8-14	30	12.3	48	121	**10G4MXS**	**10G4MXSS**	350	350
18, 20	3/4	3/4-14	1 1/16-12	36	15.5	52	188	**12G4MXS**	**12G4MXSS**	315	315
25	1	1 11	1 5/16-12	46	21.5	60	340	**16G4MXS**	**16G4MXSS**	280	280
28, 30, 32	1 1/4	1 1/4-11	1 5/8-12	50	27.5	63	438	**20G4MXS**	**20G4MXSS**	210	210
35, 38	1 1/2	1 1/2-11	1 7/8-12	55	33.0	67	526	**24G4MXS**	**24G4MXSS**	140	140

Order codes shown are part of our current manufacturing programme.

Imperial and metric parts may vary in hexagon dimensions.

$\frac{\text{PN (bar)}}{10}$ = PN (MPa)

Do not create drawings from these dimensions, they are subject to change and ISO manufacturing allowances.

Kovai.co.in

GMTX Female connector

Triple-Lok® 37° Flare end / Female NPTF* thread (SAE J476)
SAE 070103 MS51503
*Stainless Steel = NPT to prevent galling

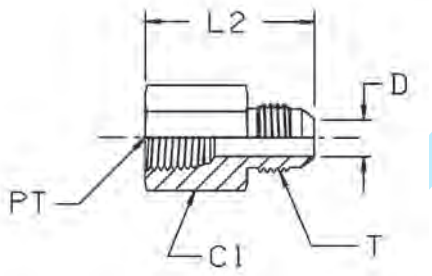

Tube O.D. mm	Tube O.D. in.	Thread NPT/NPTF PT	Thread UN/UNF-2A T	C1 mm	D mm	L2 mm	Weight (steel) g/1 piece	Triple-Lok® Steel	Triple-Lok® Stainless Steel	PN (bar) S	PN (bar) SS
2	1/8	1/8-27	5/16-24	14.3	1.6	28.0	18	**2 GTX-S**		420	
6	1/4	1/8-27	7/16-20	14.3	4.4	30.0	42	**4 GTX-S**	**4GMTXSS**	420	350
6	1/4	1/4-18	7/16-20	19.0	4.4	35.0	40	**4-4 GTX-S**	**4-4GMTXSS**	420	350
8	5/16	1/8-27	1/2-20	14.3	6.0	30.0	40	**5 GTX-S**	**5GMTXSS**	420	350
8	5/16	1/4-18	1/2-20	19.0	6.0	35.5	42	**5-4 GTX-S**	**5-4GMTXSS**	420	350
10	3/8	1/4-18	9/16-18	19.0	7.5	36.0	40	**6 GTX-S**	**6GMTXSS**	420	350
10	3/8	3/8-18	9/16-18	22.3	7.5	37.0	62	**6-6 GTX-S**	**6-6GMTXSS**	420	350
10	3/8	1/2-14	9/16-18	22.3	7.5	43.0	90	**6-8 GTX-S**	**6-8GMTXSS**	350	350
12	1/2	3/8-18	3/4-16	22.3	9.9	40.0	45	**8 GTX-S**	**8GMTXSS**	420	350
12	1/2	1/4-18	3/4-16	20.6	9.9	36.0	80	**8-4 GTX-S**	**8-4GMTXSS**	420	350
12	1/2	1/2-14	3/4-16	28.6	9.9	46.0	116	**8-8 GTX-S**	**8-8GMTXSS**	350	350
12	1/2	3/4-14	3/4-16	35.0	9.9	47.0	150	**8-12 GTX-S**	**8-12GMTXSS**	280	280
14, 15,16	5/8	1/2-14	7/8-14	28.6	12.3	48.0	121	**10 GTX-S**	**10GMTXSS**	350	350
14, 15,16	5/8	3/4-14	7/8-14	35.0	12.3	50.0	182	**10-12 GTX-S**	**10-12GMTXSS**	280	280
18, 20	3/4	3/4-14	1 1/16-12	35.0	15.5	52.0	188	**12 GTX-S**	**12GMTXSS**	280	280
18, 20	3/4	1/2-14	1 1/16-12	28.6	15.5	52.0	133	**12-8 GTX-S**	**12-8GMTXSS**	350	350
25	1	1-11.5	1 5/16-12	41.3	21.4	60.0	280	**16 GTX-S**	**16GMTXSS**	210	210
28, 30, 32	1 1/4	1 1/4-11.5	1 5/8-12	51.0	27.4	63.0	408	**20 GTX-S**	**20GMTXSS**	170	170
35, 38	1 1/2	1 1/2-11.5	1 7/8-12	60.3	33.3	67.0	370	**24 GTX-S**	**24GMTXSS**	140	140

Order codes shown are part of our current manufacturing programme.

Imperial and metric parts may vary in hexagon dimensions.

$\frac{\text{PN (bar)}}{10}$ = PN (MPa)

Do not create drawings from these dimensions, they are subject to change and ISO manufacturing allowances.

KOVOW

WGMTX Female bulkhead connector

Triple-Lok® 37° Flare end / Female NPTF* thread (SAE J476)
*Stainless Steel = NPT to prevent galling

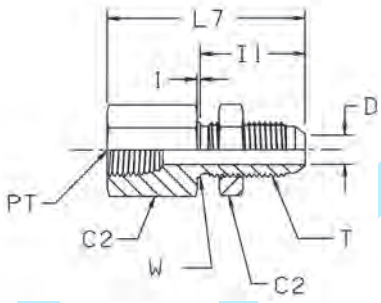

Tube O.D. mm	Tube O.D. in.	Thread NPT/NPTF PT	Thread UN/UNF-2A T	C2 mm	D mm	I1 mm	L7 mm	W mm	Weight (steel) g/1 piece	Triple-Lok® Steel	Triple-Lok® Stainless Steel	PN (bar) S	PN (bar) SS
6	1/4	1/8-27	7/16-20	17.5	4.4	31	47	11	42	**4 WGTX-WLN-S**	**4WGMTXWLNMSS**	420	350
6	1/4	1/4-18	7/16-20	19.0	4.4	31	54	11	62	**4-4 WGTX-WLN-S**	**4-4WGMTXWLNMSS**	420	350
10	3/8	1/4-18	9/16-18	20.6	7.5	33	54	14	72	**6 WGTX-WLN-S**	**6WGMTXWLNMSS**	420	350
12	1/2	3/8-18	3/4-16	25.4	9.9	37	59	19	117	**8 WGTX-WLN-S**	**8WGMTXWLNMSS**	420	350
14, 15,16	5/8	1/2-14	7/8-14	28.6	12.3	41	69	22	179	**10 WGTX-WLN-S**	**10WGMTXWLNMSS**	350	350
18, 20	3/4	3/4-14	1 1/16-12	35.0	15.5	45	75	27	284	**12 WGTX-WLN-S**	**12WGMTXWLNMSS**	280	280
25	1	1-11.5	1 5/16-12	41.3	21.4	45	81	33	415	**16 WGTX-WLN-S**	**16WGMTXWLNMSS**	210	210

Order codes shown are part of our current manufacturing programme.

Imperial and metric parts may vary in hexagon dimensions.

For the version without the locknut remove “WLNM” (e.g. 10 WGTX)

$\frac{\text{PN (bar)}}{10}$ = PN (MPa)

Do not create drawings from these dimensions, they are subject to change and ISO manufacturing allowances.

Maximum bulkhead wallthickness

Size	Tube O.D. inch	Tube O.D. metric	Straight bulkhead union Max. thickness mm	Shape bulkhead union Max. thickness mm
4	1/4	6	8.4	5.3
5	5/16	8	8.4	5.3
6	3/8	10	10.7	7.1
8	1/2	12	11.2	8.4
10	5/8	14–16	10.9	8.1
12	3/4	18–20	11.2	8.6
14	7/8		10.4	7.9
16	1	22–25	9.9	7.4
20	1 1/4	28–32	10.2	7.4
24	1 1/2	35–38	7.1	—
32	2		7.1	—

DMTX Female elbow connector

Triple-Lok® 37° Flare end / Female NPTF* thread (SAE J476)
SAE 070203 MS51506
*Stainless Steel = NPT to prevent galling

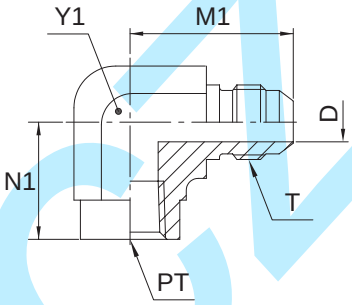

Tube O.D. mm	in.	Thread NPT/NPTF PT	Thread UN/UNF-2A T	D mm	M1 mm	N1 mm	Y1 mm	Weight (steel) g/1 piece	Triple-Lok® Steel	Triple-Lok® Stainless Steel	Triple-Lok® Brass	PN (bar) S	SS
6	1/4	1/8-27	7/16-20	4.4	27	17	14.0	33	**4 DTX-S**	**4 DTX-SS**	**4 DTX-B**	350	350
6	1/4	1/4-18	7/16-20	4.4	31	22	19.0	70	**4-4 DTX-S**	**4-4 DTX-SS**	**4-4 DTX-B**	350	350
8	5/16	1/8-27	1/2-20	6.0	27	17	14.0	33	**5 DTX-S**	**5 DTX-SS**	**5 DTX-B**	350	350
8	5/16	1/4-18	1/2-20	6.0	31	22	19.0	67	**5-4 DTX-S**	**5-4 DTX-SS**	**5-4 DTX-B**	350	350
10	3/8	1/4-18	9/16-18	7.5	31	22	19.0	67	**6 DTX-S**	**6 DTX-SS**	**6 DTX-B**	350	350
10	3/8	1/8-27	9/16-18	7.5	31	17	14.0	39	**6-2 DTX-S**	**6-2 DTX-SS**	**6-2 DTX-B**	350	350
10	3/8	3/8-18	9/16-18	7.5	33	26	22.0	103	**6-6 DTX-S**	**6-6 DTX-SS**	**6-6 DTX-B**	310	310
12	1/2	3/8-18	3/4-16	9.9	36	26	22.0	115	**8 DTX-S**	**8 DTX-SS**	**8 DTX-B**	310	310
12	1/2	1/4-18	3/4-16	9.9	36	26	19.0	190	**8-4 DTX-S**	**8-4 DTX-SS**	**8-4 DTX-B**	350	350
12	1/2	1/2-14	3/4-16	9.9	39	31	27.0	178	**8-8 DTX-S**	**8-8 DTX-SS**	**8-8 DTX-B**	210	210
14, 15,16	5/8	1/2-14	7/8-14	12.3	42	31	27.0	180	**10 DTX-S**	**10 DTX-SS**	**10 DTX-B**	210	210
18, 20	3/4	3/4-14	1 1/16-12	15.5	48	35	33.3	315	**12 DTX-S**	**12 DTX-SS**	**12 DTX-B**	210	210
18, 20	3/4	1/2-14	1 1/16-12	15.5	48	34	27.0	175	**12-8 DTX-S**	**12-8 DTX-SS**	**12-8 DTX-B**	210	210
22	7/8	3/4-14	1 3/16-12	18.3	47	36	33.3	285	**14 DTX-S**	**14 DTX-SS**		125	125
25	1	1-11.5	1 5/16-12	21.4	55	41	41.0	506	**16 DTX-S**	**16 DTX-SS**	**16 DTX-B**	125	125
28, 30, 32	1 1/4	1 1/4-11.5	1 5/8-12	27.4	59	43	47.7	619	**20 DTX-S**	**20 DTX-SS**	**20 DTX-B**	100	100
35, 38	1 1/2	1 1/2-11.5	1 7/8-12	33.3	73	53	64.0	1725	**24 DTX-S**	**24 DTX-SS**		100	100

Order codes shown are part of our current manufacturing programme.

Imperial and metric parts may vary in hexagon dimensions.

$\frac{\text{PN (bar)}}{10}$ = PN (MPa)

Pressure ratings – PN shown, apply to Steel and Stainless Steel versions of the product.

For Brass parts reduce pressures by 35 %.

Do not create drawings from these dimensions, they are subject to change and ISO manufacturing allowances.

K

kovaz.cz

OTX Female branch tee

Triple-Lok® 37° Flare ends / Female NPTF* thread (SAE J476)
SAE 070427 MS51513
*Stainless Steel = NPT to prevent galling

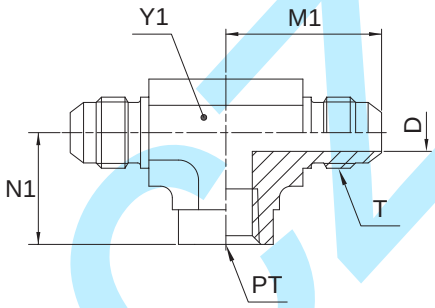

Tube O.D. mm	Tube O.D. in.	Thread NPT/NPTF PT	Thread UN/UNF-2A T	D mm	M1 mm	N1 mm	Y1 mm	Weight (steel) g/1 piece	Triple-Lok® Steel	Triple-Lok® Stainless Steel	Triple-Lok® Brass	PN (bar) S	PN (bar) SS
6	1/4	1/8-27	7/16-20	4.4	27	17	14.0	53	**4 OTX-S**	**4 OTX-SS**	**4 OTX-B**	350	350
8	5/16	1/8-27	1/2-20	6.0	27	17	14.0	53	**5 OTX-S**	**5 OTX-SS**	**5 OTX-B**	350	350
10	3/8	1/4-18	9/16-18	7.5	32	22	19.0	98	**6 OTX-S**	**6 OTX-SS**	**6 OTX-B**	350	350
12	1/2	3/8-18	3/4-16	9.9	36	26	22.0	145	**8 OTX-S**	**8 OTX-SS**	**8 OTX-B**	310	310
14, 15,16	5/8	1/2-14	7/8-14	12.3	42	32	27.0	240	**10 OTX-S**	**10 OTX-SS**	**10 OTX-B**	210	210
18, 20	3/4	3/4-14	1 1/16-12	15.5	48	35	33.3	390	**12 OTX-S**	**12 OTX-SS**	**12 OTX-B**	210	210
25	1	1-11.5	1 5/16-12	21.4	55	41	41.0	745	**16 OTX-S**	**16 OTX-SS**	**16 OTX-B**	125	125
28, 30, 32	1 1/4	1 1/4-11.5	1 5/8-12	27.4	59	43	47.7	930	**20 OTX-S**	**20 OTX-SS**		100	100
35, 38	1 1/2	1 1/2-11.5	1 7/8-12	33.3	73	53	64.0	2255	**24 OTX-S**	**24 OTX-SS**		100	100

Order codes shown are part of our current manufacturing programme.

Imperial and metric parts may vary in hexagon dimensions.

$\frac{\text{PN (bar)}}{10}$ = PN (MPa)

Pressure ratings – PN shown, apply to Steel and Stainless Steel versions of the product.

For Brass parts reduce pressures by 35 %.

Do not create drawings from these dimensions, they are subject to change and ISO manufacturing allowances.

Kovaz.cz

MTX Female run tee

Triple-Lok® 37° Flare ends / Female NPTF* thread (SAE J476)
SAE 070426 MS51514
*Stainless Steel = NPT to prevent galling

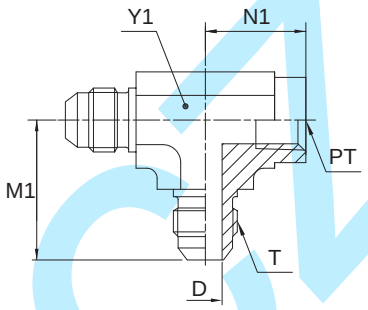

Tube O.D. mm	Tube O.D. in.	Thread NPT/NPTF PT	Thread UN/UNF-2A T	D mm	M1 mm	N1 mm	Y1 mm	Weight (steel) g/1 piece	Triple-Lok® Steel	Triple-Lok® Stainless Steel	Triple-Lok® Brass	PN (bar) S	PN (bar) SS
6	1/4	1/8-27	7/16-20	4.4	27	17	14.0	45	**4 MTX-S**	**4 MTX-SS**	**4 MTX-B**	350	350
10	3/8	1/4-18	9/16-18	7.5	32	22	19.0	88	**6 MTX-S**	**6 MTX-SS**	**6 MTX-B**	350	350
12	1/2	3/8-18	3/4-16	9.9	36	26	22.0	125	**8 MTX-S**	**8 MTX-SS**	**8 MTX-B**	310	310
14, 15,16	5/8	1/2-14	7/8-14	12.3	42	32	27.0	210	**10 MTX-S**	**10 MTX-SS**	**10 MTX-B**	210	210
18, 20	3/4	3/4-14	1 1/16-12	15.5	48	35	33.3	280	**12 MTX-S**	**12 MTX-SS**	**12 MTX-B**	210	210
22	7/8	3/4-14	1 3/16-12	18.3	47	36	33.3	446	**14 MTX-S**			210	—
25	1	1-11.5	1 5/16-12	21.4	55	41	41.0	620	**16 MTX-S**	**16 MTX-SS**		125	125
28, 30, 32	1 1/4	1 1/4-11.5	1 5/8-12	27.4	59	43	47.7	805	**20 MTX-S**	**20 MTX-SS**		100	100

Order codes shown are part of our current manufacturing programme.

Imperial and metric parts may vary in hexagon dimensions.

$\frac{\text{PN (bar)}}{10}$ = PN (MPa)

Pressure ratings – PN shown, apply to Steel and Stainless Steel versions of the product.

For Brass parts reduce pressures by 35 %.

Do not create drawings from these dimensions, they are subject to change and ISO manufacturing allowances.

K

Kovaz.cz

G6X Swivel connector

Triple-Lok® 37° Flare female swivel end / Female NPTF* thread (SAE J476)
*Stainless Steel = NPT to prevent galling

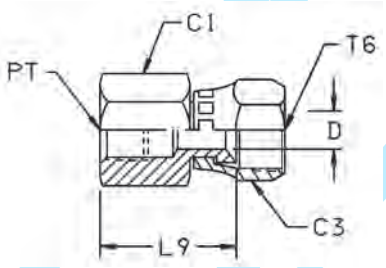

Tube O.D. mm	Tube O.D. in.	Thread NPT/NPTF PT	Thread UN/UNF-2B T6	C1 mm	C3 mm	D mm	L9 mm	Weight (steel) g/1 piece	Triple-Lok® Steel	Triple-Lok® Stainless Steel	PN (bar) S	PN (bar) SS
6	1/4	1/8-27	7/16-20	14.3	14.3	4.4	23	29	**4 G6X-S**	**4 G6X-SS**	420	420
6	1/4	1/4-18	7/16-20	19.0	14.3	4.4	27	33	**4-4 G6X-S**	**4-4 G6X-SS**	420	420
10	3/8	1/4-18	9/16-18	19.0	17.5	7.5	27	38	**6 G6X-S**	**6 G6X-SS**	350	350
10	3/8	3/8-18	9/16-18	22.2	17.5	7.5	29	45	**6-6 G6X-S**	**6-6 G6X-SS**	350	350
12	1/2	3/8-18	3/4-16	22.2	22.2	9.9	31	47	**8 G6X-S**	**8 G6X-SS**	350	350
12	1/2	1/2-14	3/4-16	28.6	22.2	9.9	38	99	**8-8 G6X-S**	**8-8 G6X-SS**	350	350
14, 15,16	5/8	1/2-14	7/8-14	28.6	25.4	12.3	37	99	**10 G6X-S**	**10 G6X-SS**	350	350
18, 20	3/4	3/4-14	1 1/16-12	35.0	31.6	15.5	38	147	**12 G6X-S**	**12 G6X-SS**	280	280
25	1	1-11.5	1 5/16-12	41.3	38.0	21.4	47	248	**16 G6X-S**	**16 G6X-SS**	210	210
28, 30, 32	1 1/4	1 1/4-11.5	1 5/8-12	51.0	50.8	27.4	55	370	**20 G6X-S**	**20 G6X-SS**	170	170
35, 38	1 1/2	1 1/2-11.5	1 7/8-12	60.3	57.2	33.3	57	510	**24 G6X-S**	**24 G6X-SS**	140	140

Order codes shown are part of our current manufacturing programme.

Imperial and metric parts may vary in hexagon dimensions.

$\frac{\text{PN (bar)}}{10}$ = PN (MPa)

Do not create drawings from these dimensions, they are subject to change and ISO manufacturing allowances.

Kovai.co.in

G4MXMO Pressure gauge connector

Triple-Lok® 37° Flare end / Female BSPP gauge thread (ISO 1179-1)

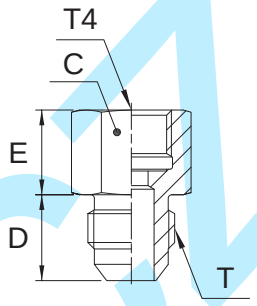

Tube O.D. mm	Tube O.D. in.	Thread BSPP T4	Thread UN/UNF-2A T	D mm	E mm	C mm	Weight (steel) g/1 piece	Triple-Lok® Steel	Triple-Lok® Stainless Steel	PN (bar) S	PN (bar) SS
6	1/4	1/4-19	7/16-20	14	21	19	86	**4-4G4MXSMO**	**4-4G4MXSSMO**	350	350
6	1/4	1/2-14	7/16-20	14	25	27	246	**4-8G4MXSMO**	**4-8G4MXSSMO**	315	315
8	5/16	1/4-19	1/2-20	14	21	19	49	**5-4G4MXSMO**	**5-4G4MXSSMO**	350	350
8	5/16	1/2-14	1/2-20	14	27	27	246	**5-8G4MXSMO**	**5-8G4MXSSMO**	315	315
10	3/8	1/4-19	9/16-20	14	22	19	49	**6G4MXSMO**	**6G4MXSSMO**	350	350
10	3/8	1/2-14	9/16-20	14	29	30	239	**6-8G4MXSMO**	**6-8G4MXSSMO**	315	315
12	1/2	1/4-19	3/4-16	17	22	22	74	**8-4G4MXSMO**	**8-4G4MXSSMO**	400	350
12	1/2	1/2-14	3/4-16	17	28	30	263	**8-8G4MXSMO**	**8-8G4MXSSMO**	315	315

This part requires a copper washer. For more details on other seal materials see page K92.

Order codes shown are part of our current manufacturing programme.

Imperial and metric parts may vary in hexagon dimensions.

$\frac{\text{PN (bar)}}{10} = \text{PN (MPa)}$

Do not create drawings from these dimensions, they are subject to change and ISO manufacturing allowances.

Kovaz.cz

TT4MX Test point connector

Triple-Lok® 37° Flare female end / Female BSPP thread (ISO 1179-1)
for EMA3 test point

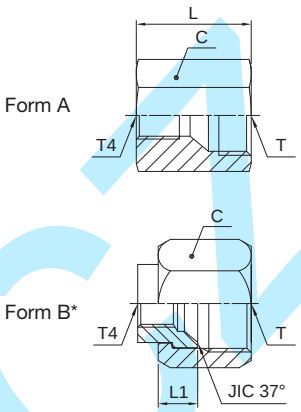

* Form B has to be assembled with a nut
BMTX / BTX (to be ordered separately).

Tube O.D. T mm	Tube O.D. T in.	Thread BSPP T4	Thread UN/UNF-2B T	Form	L mm	L1 mm	C mm	Weight (steel) g/1 piece	Triple-Lok® Steel	Triple-Lok® Stainless Steel	PN (bar) S	PN (bar) SS
6	1/4	1/4-19	7/16-20	A	29	–	19	42	**4TT4MXS**	**4TT4MXSS**	400	350
8	5/16	1/4-19	1/2-20	A	29	–	19	46	**5TT4MXS**	**5TT4MXSS**	400	350
10	3/8	1/4-19	9/16-18	A	29	–	19	43	**6TT4MXS**	**6TT4MXSS**	400	350
12	1/2	1/4-19	3/4-16	A	32	–	22	62	**8TT4MXS**	**8TT4MXSS**	400	350
14, 15, 16	5/8	1/4-19	7/8-14	A	32	–	27	102	**10TT4MXS**	**10TT4MXSS**	350	350
18, 20	3/4	1/4-19	1 1/16-12	B	–	11	32	42	**12TT4XS**	**12TT4XSS**	350	350
25	1	1/4-19	1 5/16-12	B	–	12	41	56	**16TT4XS**	**16TT4XSS**	280	280
28, 30, 32	1 1/4	1/4-19	1 5/8-12	B	–	15	50	98	**20TT4XS**	**20TT4XSS**	280	210
35, 38	1 1/2	1/4-19	1 7/8-12	B	–	17	60	185	**24TT4XS**	**24TT4XSS**	210	210

Order codes shown are part of our current manufacturing programme.

Imperial and metric parts may vary in hexagon dimensions.

$\frac{\text{PN (bar)}}{10}$ = PN (MPa)

Do not create drawings from these dimensions, they are subject to change and ISO manufacturing allowances.

Kovaci

TTP4MX Test point connection

Triple-Lok® 37° Flare female end / EMA3 test point

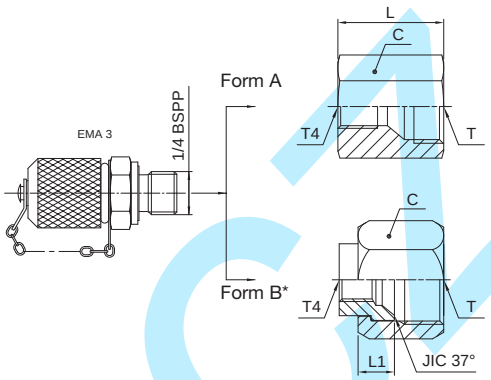

* Form B versions delivered complete with BMTXS nut.

Tube O.D. T mm	Tube O.D. T in.	Thread BSPP T4	Thread UN/UNF-2B T	Form	L mm	L1 mm	C mm	Weight (steel) g/1 piece	Triple-Lok® Steel	PN (bar)
6	1/4	1/4-19	7/16-20	A	29	–	19	132	**4TTP4MXS**	400
8	5/16	1/4-19	1/2-20	A	29	–	19	136	**5TTP4MXS**	400
10	3/8	1/4-19	9/16-18	A	29	–	19	133	**6TTP4MXS**	400
12	1/2	1/4-19	3/4-16	A	32	–	22	152	**8TTP4MXS**	400
14, 15, 16	5/8	1/4-19	7/8-14	A	32	–	27	192	**10TTP4MXS**	350
18, 20	3/4	1/4-19	1 1/16-12	B	–	11	32	132	**12TTP4XS**	350
25	1	1/4-19	1 5/16-12	B	–	12	41	146	**16TTP4XS**	280
28, 30, 32	1 1/4	1/4-19	1 5/8-12	B	–	15	50	188	**20TTP4XS**	280
35, 38	1 1/2	1/4-19	1 7/8-12	B	–	17	60	275	**24TTP4XS**	210

Order codes shown are part of our current manufacturing programme.

Imperial and metric parts may vary in hexagon dimensions.

$\frac{\text{PN (bar)}}{10}$ = PN (MPa)

Do not create drawings from these dimensions, they are subject to change and ISO manufacturing allowances.

kovaz.cz

R6O4MX Test point connector

Male / Female swivel Triple-Lok® 37° flare end / Female BSPP thread (ISO 1179-1)

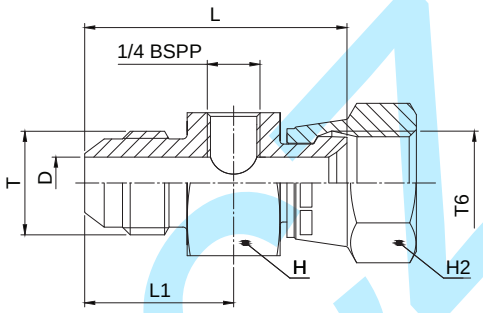

Tube O.D. T mm	Tube O.D. T in.	Thread UN/UNF-2A T	Thread UN/UNF-2B T6	D mm	L mm	L1 mm	H mm	H2 mm	Weight (steel) g/1 piece	Triple-Lok® Steel	PN (bar)
6	1/4	7/16-20	7/16-20	4.4	45	26	36	14	180	**4-4R6O4MXS**	500
8	5/16	1/2-20	1/2-20	6.0	46	26	36	17	200	**5-4R6O4MXS**	420
10	3/8	9/16-18	9/16-18	7.5	47	26	36	19	210	**6-4R6O4MXS**	350
12	1/2	3/4-16	3/4-16	9.9	50	28	36	22	218	**8-4R6O4MXS**	350
14, 15, 16	5/8	7/8-14	7/8-14	12.3	54	31	36	27	247	**10-4R6O4MXS**	350
18, 20	3/4	1 1/16-12	1 1/16-12	15.5	56	34	41	32	326	**12-4R6O4MXS**	350
25	1	1 5/16-12	1 5/16-12	21.4	60	35	46	38	416	**16-4R6O4MXS**	250
28, 30, 32	1 1/4	1 5/8-12	1 5/8-12	27.4	64	36	50	50	601	**20-4R6O4MXS**	250
35, 38	1 1/2	1 7/8-12	1 7/8-12	33.3	69	39	60	60	905	**24-4R6O4MXS**	170

Order codes shown are part of our current manufacturing programme.

Imperial and metric parts may vary in hexagon dimensions.

$\frac{\text{PN (bar)}}{10}$ = PN (MPa)

Do not create drawings from these dimensions, they are subject to change and ISO manufacturing allowances.

Kovaz.cz

R6P4MX Test point connector

Male / Female swivel Triple-Lok® 37° flare end / EMA3 test point

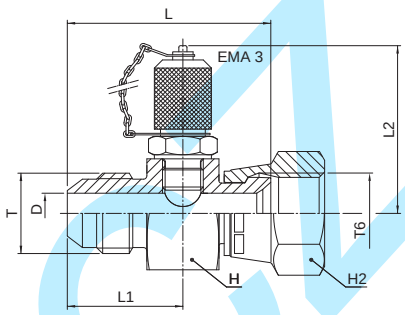

Tube O.D. T mm	Tube O.D. T in.	Thread UN/UNF-2A T	Thread UN/UNF-2B T6	D mm	L mm	L1 mm	L2 mm	H mm	H2 mm	Weight (steel) g/1 piece	Triple-Lok® Steel	PN (bar)
6	1/4	7/16-20	7/16-20	4.4	45	26	54	36	14	270	**4-4R6P4MXS**	500
8	5/16	1/2-20	1/2-20	6.0	46	26	54	36	17	290	**5-4R6P4MXS**	420
10	3/8	9/16-18	9/16-18	7.5	47	26	54	36	19	300	**6-4R6P4MXS**	350
12	1/2	3/4-16	3/4-16	9.9	50	28	54	36	22	308	**8-4R6P4MXS**	350
14, 15, 16	5/8	7/8-14	7/8-14	12.3	54	31	54	36	27	337	**10-4R6P4MXS**	350
18, 20	3/4	1 1/16-12	1 1/16-12	15.5	56	34	54	41	32	416	**12-4R6P4MXS**	350
25	1	1 5/16-12	1 5/16-12	21.4	60	35	54	46	38	506	**16-4R6P4MXS**	250
28, 30, 32	1 1/4	1 5/8-12	1 5/8-12	27.4	64	36	54	50	50	691	**20-4R6P4MXS**	250
35, 38	1 1/2	1 7/8-12	1 7/8-12	33.3	69	39	54	60	60	995	**24-4R6P4MXS**	170

Order codes shown are part of our current manufacturing programme.

Imperial and metric parts may vary in hexagon dimensions.

$\frac{\text{PN (bar)}}{10}$ = PN (MPa)

Do not create drawings from these dimensions, they are subject to change and ISO manufacturing allowances.

K

kovaz.cz

K6OO4MX Test point connector

Male / Female swivel Triple-Lok® 37° flare end / 2 BSPP female threads

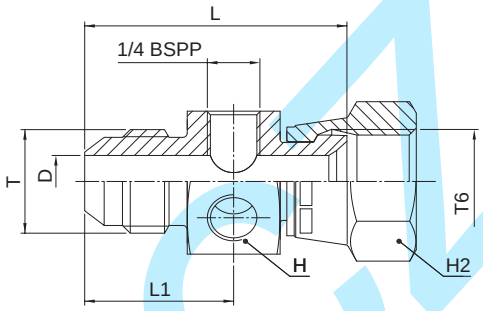

Tube O.D. T mm	Tube O.D. T in.	Thread UN/UNF-2A T	Thread UN/UNF-2B T6	D mm	L mm	L1 mm	H mm	H2 mm	Weight (steel) g/1 piece	Triple-Lok® Steel	PN (bar)
6	1/4	7/16-20	7/16-20	4.4	45	26	36	14	170	**4-4K6OO4MXS**	500
8	5/16	1/2-20	1/2-20	6.0	46	26	36	17	190	**5-4K6OO4MXS**	420
10	3/8	9/16-18	9/16-18	7.5	47	26	36	19	200	**6-4K6OO4MXS**	350
12	1/2	3/4-16	3/4-16	9.9	50	28	36	22	208	**8-4K6OO4MXS**	350
14, 15, 16	5/8	7/8-14	7/8-14	12.3	54	31	36	27	237	**10-4K6OO4MXS**	350
18, 20	3/4	1 1/16-12	1 1/16-12	15.5	56	34	41	32	316	**12-4K6OO4MXS**	350
25	1	1 5/16-12	1 5/16-12	21.4	60	35	46	38	406	**16-4K6OO4MXS**	250

Order codes shown are part of our current manufacturing programme.

Imperial and metric parts may vary in hexagon dimensions.

$\frac{\text{PN (bar)}}{10}$ = PN (MPa)

Do not create drawings from these dimensions, they are subject to change and ISO manufacturing allowances.

kovaz.cz

K6PP4MX Test point connector

Male / female swivel Triple-Lok® 37° flare end / EMA3 test point & blanking plug

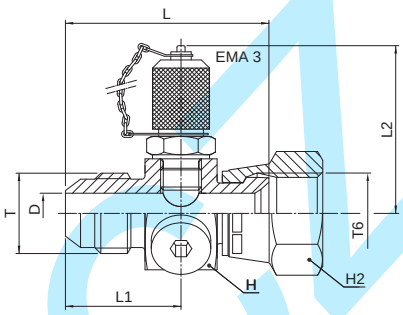

Tube O.D. T mm	Tube O.D. T in.	Thread UN/UNF-2A T	Thread UN/UNF-2B T6	D mm	L mm	L1 mm	L2 mm	H mm	H2 mm	Weight (steel) g/1 piece	Triple-Lok® Steel	PN (bar)
6	1/4	7/16-20	7/16-20	4.4	45	26	54	36	14	270	**4-4K6PP4MXS**	500
8	5/16	1/2-20	1/2-20	6.0	46	26	54	36	17	290	**5-4K6PP4MXS**	420
10	3/8	9/16-18	9/16-20	7.5	47	26	54	36	19	300	**6-4K6PP4MXS**	350
12	1/2	3/4-16	3/4-16	9.9	50	28	54	36	22	308	**8-4K6PP4MXS**	350
14, 15, 16	5/8	7/8-14	7/8-14	12.3	54	31	54	36	27	337	**10-4K6PP4MXS**	350
18, 20	3/4	1 1/16-12	1 1/16-12	15.5	56	34	54	41	32	416	**12-4K6PP4MXS**	350
25	1	1 5/16-12	1 5/16-12	21.4	60	35	54	46	38	506	**16-4K6PP4MXS**	250

Order codes shown are part of our current manufacturing programme.

Imperial and metric parts may vary in hexagon dimensions.

$\frac{\text{PN (bar)}}{10}$ = PN (MPa)

Do not create drawings from these dimensions, they are subject to change and ISO manufacturing allowances.

K

Kovaz.cz

FNMTX Cap

Triple-Lok® 37° Flare female swivel cap end
SAE 070112 MS51532

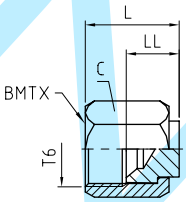

Tube O.D. mm	Tube O.D. in.	Thread UN/UNF-2B T6	C mm	LL mm	L mm	Weight (steel) g/1 piece	Triple-Lok® Steel	Triple-Lok® Stainless Steel	Triple-Lok® Brass	PN (bar) S	PN (bar) SS
	1/8	5/16-24	9.5	10	15	10	**2 FNTX-S**			500	—
	3/16	3/8-24	11.0	10	17	11	**3 FNTX-S**			500	—
6	1/4	7/16-20	14.0	9	17	14	**4FNMTXS**	**4FNMTXSS**	**4 FNTX-B**	500	350
8	5/16	1/2-20	17.0	10	21	19	**5FNMTXS**	**5FNMTXSS**	**5 FNTX-B**	420	350
10	3/8	9/16-18	19.0	12	21	31	**6FNMTXS**	**6FNMTXSS**	**6 FNTX-B**	420	350
12	1/2	3/4-16	22.0	14	23	45	**8FNMTXS**	**8FNMTXSS**	**8 FNTX-B**	420	350
14, 15, 16	5/8	7/8-14	27.0	14	27	75	**10FNMTXS**	**10FNMTXSS**	**10 FNTX-B**	350	350
18, 20	3/4	1 1/16-12	32.0	17	30	114	**12FNMTXS**	**12FNMTXSS**	**12 FNTX-B**	350	350
22	7/8	1 3/16-12	35.0	16	32	133	**14 FNTX-S**	**14FNMTXSS**	**14 FNTX-B**	310	280
25	1	1 5/16-12	41.0	16	33	200	**16FNMTXS**	**16FNMTXSS**	**16 FNTX-B**	310	280
28, 30, 32	1 1/4	1 5/8-12	50.0	19	37	272	**20FNMTXS**	**20FNMTXSS**	**20 FNTX-B**	280	210
35, 38	1 1/2	1 7/8-12	60.0	24	45	553	**24FNMTXS**	**24FNMTXSS**	**24 FNTX-B**	210	140
	2	2 1/2-12	73.0	28	52	930	**32 FNTX-S**			140	—

Order codes shown are part of our current manufacturing programme.

Imperial and metric parts may vary in hexagon dimensions.

$\frac{\text{PN (bar)}}{10}$ = PN (MPa)

Pressure ratings – PN shown, apply to Steel and Stainless Steel versions of the product.

For Brass parts reduce pressures by 35 %.

Do not create drawings from these dimensions, they are subject to change and ISO manufacturing allowances.

KOVAL

PNMTX Plug

Triple-Lok® 37° Flare end plug
SAE 070109 MS51518

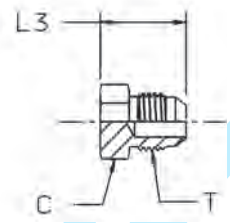

Tube O.D. mm	Tube O.D. in.	Thread UN/UNF-2A T	C mm	L mm	Weight (steel) g/1 piece	Triple-Lok® Steel	Triple-Lok® Stainless Steel	PN (bar) S	PN (bar) SS
	1/8	5/16-24	11.00	18	9	**2 PNTX-S**		500	—
	3/16	3/8-24	11.00	19	10	**3 PNTX-S**		500	—
6	1/4	7/16-20	13.00	21	10	**4PNMTXS**	**4PNMTXSS**	500	350
8	5/16	1/2-20	14.00	21	14	**5PNMTXS**	**5PNMTXSS**	420	350
10	3/8	9/16-18	16.00	21	19	**6 PNTX-S**	**6PNMTXSS**	420	350
12	1/2	3/4-16	19.00	24	39	**8PNMTXS**	**8PNMTXSS**	420	350
14, 15, 16	5/8	7/8-14	24.00	28	60	**10PNMTXS**	**10PNMTXSS**	350	350
18, 20	3/4	1 1/16-12	27.00	33	93	**12PNMTXS**	**12PNMTXSS**	350	350
22	7/8	1 3/16-12	31.75	33	95	**14 PNTX-S**	**14PNMTXSS**	280	280
25	1	1 5/16-12	35.00	34	98	**16 PNTX-S**	**16PNMTXSS**	280	280
28, 30, 32	1 1/4	1 5/8-12	42.80	37	269	**20 PNTX-S**	**20PNMTXSS**	280	210
35, 38	1 1/2	1 7/8-12	51.00	42	360	**24 PNTX-S**	**24PNMTXSS**	210	140
	2	2 1/2-12	66.60	52	470	**32 PNTX-S**		140	—

Order codes shown are part of our current manufacturing programme.

Imperial and metric parts may vary in hexagon dimensions.

$\frac{\text{PN (bar)}}{10}$ = PN (MPa)

Do not create drawings from these dimensions, they are subject to change and ISO manufacturing allowances.

K

XHMLO Conversion union

Triple-Lok® 37° Flare End / O-Lok ORFS end

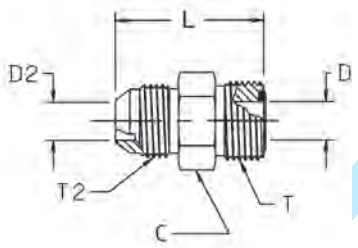

Tube O.D. T2/T mm	Tube O.D. T2/T in.	Thread UN/UNF-2A T2	Thread UN/UNF-2A T	D mm	D2 mm	L mm	C mm	Weight (steel) g/1 piece	Triple-Lok® Steel	Triple-Lok® Stainless Steel	PN (bar) S	PN (bar) SS
6	1/4	7/16-20	9/16-18	4.4	4.4	32	16.00	29	**4 XHLO-S**	**4XHMLOSS**	500	350
8, 10	5/16, 3/8	9/16-18	11/16-16	6.7	6.7	34	19.00	45	**6 XHLO-S**	**6XHMLOSS**	420	350
12	1/2	3/4-16	13/16-16	9.6	10.0	39	22.20	70	**8 XHLO-S**	**8XHMLOSS**	420	350
14, 15, 16	5/8	7/8-14	1-14	12.3	12.3	46	27.00	119	**10 XHLO-S**	**10XHMLOSS**	350	350
18, 20	3/4	1 1/16-12	1 3/16-12	15.5	15.5	52	31.75	181	**12 XHLO-S**	**12XHMLOSS**	350	350
22, 25	1	1 5/16-12	1 7/16-12	20.5	20.5	55	38.00	265	**16 XHLO-S**	**16XHMLOSS**	280	280
28, 30, 32	1 1/4	1 5/8-12	1 11/16-12	26.0	26.0	58	44.45	383	**20 XHLO-S**	**20XHMLOSS**	280	210
35, 38	1 1/2	1 7/8-12	2-12	32.0	32.0	63	54.00	562	**24 XHLO-S**	**24XHMLOSS**	210	140

Steel, stainless steel and brass Triple-Lok® parts are delivered with NBR elastomeric seals as standard. For more details on other seal materials see page K92.

Order codes shown are part of our current manufacturing programme.

Imperial and metric parts may vary in hexagon dimensions.

$\frac{\text{PN (bar)}}{10}$ = PN (MPa)

Do not create drawings from these dimensions, they are subject to change and ISO manufacturing allowances.

Kovaz

XHML6 Conversion swivel nut connector

Triple-Lok® 37° Flare end / O-Lok ORFS female swivel end

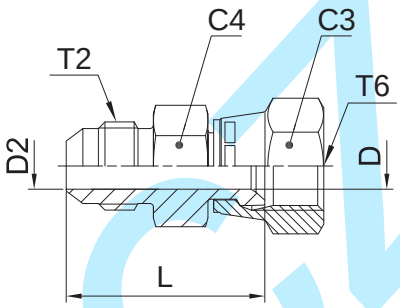

Tube O.D. T2/T6 mm	Tube O.D. T2/T6 in.	Thread UN/UNF-2A T2	Thread UN/UNF-2B T6	C3 mm	D mm	D2 mm	L mm	C4 mm	Weight (steel) g/1 piece	Triple-Lok® Steel	Triple-Lok® Stainless Steel	PN (bar) S	PN (bar) SS
6	1/4	7/16-20	9/16-18	17.5	4.2	4.2	38	16.0	29	**4 XHL6-S**	**4XHML6SS**	500	350
8, 10	5/16, 3/8	9/16-18	11/16-16	20.6	6.7	6.7	41	19.0	46	**6 XHL6-S**	**6XHML6SS**	420	350
12	1/2	3/4-16	13/16-16	23.8	9.0	9.0	48	22.2	73	**8 XHL6-S**	**8XHML6SS**	420	350
14, 15, 16	5/8	7/8-14	1-14	28.6	11.5	11.5	56	27.0	126	**10 XHL6-S**	**10XHML6SS**	350	350
18, 20	3/4	1 1/16-12	1 3/16-12	35.0	14.0	14.0	64	31.8	205	**12 XHL6-S**	**12XHML6SS**	350	350
22, 25	1	1 5/16-12	1 7/16-12	41.3	19.8	19.8	68	38.0	285	**16 XHL6-S**	**16XHML6SS**	280	280
28, 30, 32	1 1/4	1 5/8-12	1 11/16-12	47.6	26.0	26.0	71	43.0	360	**20 XHL6-S**	**20XHML6SS**	280	280

Order codes shown are part of our current manufacturing programme.

Imperial and metric parts may vary in hexagon dimensions.

$\frac{\text{PN (bar)}}{10}$ = PN (MPa)

Do not create drawings from these dimensions, they are subject to change and ISO manufacturing allowances.

K

Kovaz.cz

LOHMX6 Conversion swivel nut connector

Triple-Lok® 37° Flare female swivel end / O-Lok ORFS end

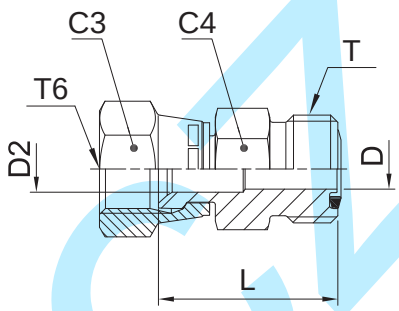

Tube O.D. T6/T mm	Tube O.D. T6/T in.	Thread UN/UNF-2B T6	Thread UN/UNF-2A T	C3 mm	D mm	D2 mm	C4 mm	L mm	Weight (steel) g/1 piece	Triple-Lok® Steel	Triple-Lok® Stainless Steel	PN (bar) S	PN (bar) SS
6	1/4	7/16-20	9/16-18	14.3	4.4	4.4	16	24.0	26	**4 LOHX6-S**	**4LOHMX6SS**	500	350
8, 10	5/16, 3/8	9/16-18	11/16-16	17.5	6.7	6.7	19	30.0	40	**6 LOHX6-S**	**6LOHMX6SS**	350	350
12	1/2	3/4-16	13/16-16	22.2	9.5	9.5	22	34.0	63	**8 LOHX6-S**	**8LOHMX6SS**	350	350
14, 15, 16	5/8	7/8-14	1-14	25.4	12.3	12.3	27	39.0	103	**10 LOHX6-S**	**10LOHMX6SS**	350	350
18, 20	3/4	1 1/16-12	1 3/16-12	31.8	15.5	15.5	32	31.8	162	**12 LOHX6-S**	**12LOHMX6SS**	350	350
22, 25	1	1 5/16-12	1 7/16-12	38.0	20.5	20.5	38	46.0	229	**16 LOHX6-S**	**16LOHMX6SS**	250	250

Steel, stainless steel and brass Triple-Lok® parts are delivered with NBR elastomeric seals as standard. For more details on other seal materials see page K92.

Order codes shown are part of our current manufacturing programme.

Imperial and metric parts may vary in hexagon dimensions.

$\frac{\text{PN (bar)}}{10} = \text{PN (MPa)}$

Do not create drawings from these dimensions, they are subject to change and ISO manufacturing allowances.

kovaz.cz

WLNM Bulkhead locknut

Bulkhead fitting locknut
SAE 080118 MS51860

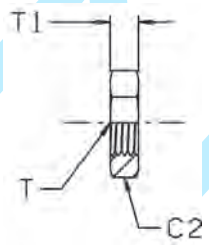

Thread UN/UNF-2B T	C2 mm	T1 mm	Weight (steel) g/1 piece	Triple-Lok® Steel	Triple-Lok® Stainless Steel	Triple-Lok® Brass
3/8-24	17	6	9	**3 WLN-S**		
7/16-20	17	7	9	**4WLNMS**	**4WLNMSS**	**4WLNMB**
1/2-20	19	7	9	**5WLNMS**	**5WLNMSS**	**5WLNMB**
9/16-18	22	7	11	**6WLNMS**	**6WLNMSS**	**6WLNMB**
3/4-16	24	8	18	**8WLNMS**	**8WLNMSS**	**8WLNMB**
7/8-14	30	9	24	**10WLNMS**	**10WLNMSS**	**10WLNMB**
1 1/16-12	36	10	42	**12WLNMS**	**12WLNMSS**	**12WLNMB**
1 3/16-12	38	10	45	**14 WLN-S**	**14WLNMSS**	**14WLNMB**
1 5/16-12	41	10	49	**16WLNMS**	**16WLNMSS**	**16WLNMB**
1 5/8-12	50	10	50	**20WLNMS**	**20WLNMSS**	**20WLNMB**
1 7/8-12	55	10	68	**24WLNMS**	**24WLNMSS**	**24WLNMB**
2 1/2-12	70	10	80	**32 WLN-S**		

Order codes shown are part of our current manufacturing programme.
Imperial and metric parts may vary in hexagon dimensions.
Do not create drawings from these dimensions, they are subject to change and ISO manufacturing allowances.

kovaz.cz

Spare parts guide – Triple-Lok® retaining rings and seals

BSPP male threads – ISO 1179

BSPP Thread	ED seal Order code NBR	ED seal Order code FKM	O-ring order code* NBR	O-ring order code* FKM	O-ring ID × section mm	Retainer ring Order code Steel	Retainer ring Order code Stainless Steel	Copper washer Order code
1/8	**ED10X1X**	**ED10X1VITX**	**6-002-N552-9**	**6-002-V894-9**	8.00 × 2.00	**8207-1/8**	**8207SS1/8**	**–**
1/4	**ED14X1.5X**	**ED14X1.5VITX**	**2-111-N552-9**	**2-111-V894-9**	10.77 × 2.62	**8207-1/4**	**8207SS1/4A**	**M25180**
3/8	**ED3/8X**	**ED3/8VITX**	**2-113-N552-9**	**2-113-V894-9**	13.94 × 2.62	**8207-3/8**	**8207SS3/8A**	**–**
1/2	**ED1/2X**	**ED1/2VITX**	**5-256-N552-9**	**5-256-V894-9**	17.96 × 2.62	**8207-1/2**	**8207SS1/2**	**M25182**
3/4	**ED26X1.5X**	**ED26X1.5VITX**	**2-119-N552-9**	**2-119-V894-9**	23.47 × 2.62	**8207-3/4**	**8207SS3/4**	**–**
1	**ED33X2X**	**ED33X2VITX**	**2-217-N552-9**	**2-217-V894-9**	29.74 × 3.53	**8207-1**	**8207SS1A**	**–**
1 1/4	**ED42X2X**	**ED42X2VITX**	**2-222-N552-9**	**2-222-V894-9**	37.69 × 3.53	**8207-1-1/4**	**8207SS1 1/4**	**–**
1 1/2	**ED48X2X**	**ED48X2VITX**	**2-224-N552-9**	**2-224-V894-9**	44.04 × 3.53	**8207-1-1/2**	**8207SS1 1/2**	**–**

Typical fittings using these parts: F42EDMX / F4OMX / C4OMX / V4OMX etc.

* Must be used with correct retainer ring

Metric male threads – ISO 9974

Metric Thread	ED seal order code NBR	ED seal order code FKM	O-ring Order code* NBR	O-ring Order code* FKM	O-ring ID × section mm	Retainer ring Order code Steel	Retainer ring Order code Stainless Steel
M 10×1.0	**ED10X1X**	**ED10X1VITX**	**6-074-N552-9**	**6-074-V894-9**	8.00 × 1.50	**M10RR**	**RRM10X1SS**
M 12×1.5	**ED12X1.5X**	**ED12x1.5VITX**	**2-012-N552-9**	**2-012-V894-9**	9.25 × 1.78	**M12RR**	**RRM12X1.5SS**
M 14×1.5	**ED14X1.5X**	**ED14X1.5VITX**	**2-013-N552-9**	**2-013-V894-9**	10.82 × 1.78	**M14RR**	**RRM14X1.5SS**
M 16×1.5	**ED16X1.5X**	**ED16X1.5VITX**	**3-907-N552-9**	**3-907-V894-9**	13.46 × 2.08	**M16RR**	**RRM16X1.5SS**
M 18×1.5	**ED18X1.5X**	**ED18X1.5VITX**	**2-114-N552-9**	**2-114-V894-9**	15.54 × 2.62	**M18RR**	**RRM18X1.5SS**
M 22×2.0	**ED22X1.5X**	**ED22X1.5VITX**	**2-018-N552-9**	**2-018-V894-9**	18.77 × 1.78	**M22RR**	**RRM22X1.5SS**
M 27×2.0	**ED26X1.5X****	**ED26X1.5VITX**	**2-119-N552-9**	**2-119-V894-9**	23.47 × 2.62	**M27RR**	**RRM27X2SS**
M 33×2.0	**ED33X2X**	**ED33X2VITX**	**2-122-N552-9**	**2-122-V894-9**	28.24 × 2.62	**M33RR**	**RRM33X2SS**
M 42×2.0	**ED42X2X**	**ED42X2VITX**	**2-128-N552-9**	**2-128-V894-9**	37.77 × 2.62	**M42RR**	**RRM42X2SS**
M 48×2.0	**ED48X2X**	**ED48X2VITX**	**2-132-N552-9**	**2-132-V894-9**	44.12 × 2.62	**M48RR**	**RRM48X2SS**

Typical fittings using these parts: F82EDMX / F8OMX / C8OMX / V8OMX etc.

* Must be used with correct retainer ring

** Same seal used for M 26×1.5 and M 27×2.0 Threads

UN / UNF male threads – ISO 11926

UN / UNF Thread	Dash size	O-ring Order code NBR	O-ring Order code FKM	O-Ring ID × section (mm)
5/16-24	2	**3-902-N552-9**	**3-902-V894-9**	6.07 × 1.63
3/8-24	3	**3-903-N552-9**	**3-903-V894-9**	7.65 × 1.63
7/16-20	4	**3-904-N552-9**	**3-904-V894-9**	8.92 × 1.83
1/2-20	5	**3-905-N552-9**	**3-905-V894-9**	10.52 × 1.83
9/16-18	6	**3-906-N552-9**	**3-906-V894-9**	11.89 × 1.98
3/4-16	8	**3-908-N552-9**	**3-908-V894-9**	16.36 × 2.21
7/8-14	10	**3-910-N552-9**	**3-910-V894-9**	19.18 × 2.46
1 1/16-12	12	**3-912-N552-9**	**3-912-V894-9**	23.47 × 2.95
1 3/16-12	14	**3-914-N552-9**	**3-914-V894-9**	26.59 × 2.95
1 5/16-12	16	**3-916-N552-9**	**3-916-V894-9**	29.74 × 2.95
1 5/8-12	20	**3-920-N552-9**	**3-920-V894-9**	37.47 × 3.00
1 7/8-12	24	**3-924-N552-9**	**3-924-V894-9**	43.69 × 3.00
2 1/2-12	32	**3-932-N552-9**	**3-932-V894-9**	59.36 × 3.00

Typical fittings using these parts: F5OMX / C5OMX / R5OMX etc.

Metric male threads – ISO 6149

Metric Thread	O-ring Order code NBR	O-ring Order code FKM	O-Ring ID × section (mm)
M 10×1.0	**6-345-N552-9**	**6-345-V894-9**	8.20 × 1.50
M 12×1.5	**6-346-N552-9**	**6-346-V894-9**	9.40 × 2.10
M 14×1.5	**6-347-N552-9**	**6-347-V894-9**	11.40 × 2.10
M 16×1.5	**6-348-N552-9**	**6-348-V894-9**	13.40 × 2.10
M 18×1.5	**6-349-N552-9**	**6-349-V894-9**	15.40 × 2.10
M 22×1.5	**6-350-N552-9**	**6-350-V894-9**	19.40 × 2.10
M 27×2.0	**6-351-N552-9**	**6-351-V894-9**	23.70 × 2.80
M 33×2.0	**6-352-N552-9**	**6-352-V894-9**	29.70 × 2.80
M 42×2.0	**6-353-N552-9**	**6-353-V894-9**	38.70 × 2.80
M 48×2.0	**6-354-N552-9**	**6-354-V894-9**	46.70 × 2.80

Typical fittings using these parts: F87OMX / S87OMX etc.

Other seal compounds available on request for alternative applications

Ferulok® Flareless

Bite Type Fittings

Visual index

Tube-Tube	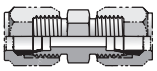 **HBU** p. L6 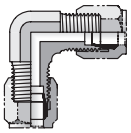 **EBU** p. L6 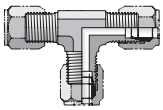 **JBU** p. L7
Bulkhead unions	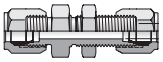 **WBU** p. L7
Tube to male NPTF	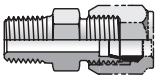 **FBU** p. L11 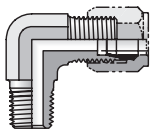 **CBU** p. L12
Tube to straight thread UNF	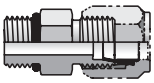 **F5BU** p. L10 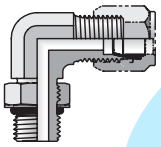 **C5BU** p. L12
Tube to female NPTF	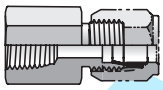 **GBU** p. L13
Tube to Flareless Swivel	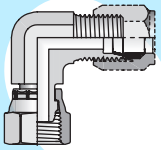 **C6BU** p. L8 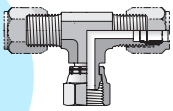 **S6BU** p. L8 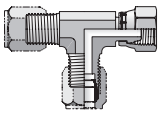 **R6BU** p. L9
Nuts & Sleeves Reducers, Caps & Plugs	**BU** p. L5 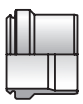 **TU** p. L5 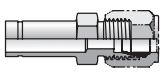 **TRBU** p. L9 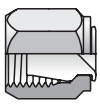 **FNU** p. L13 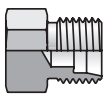 **PNU** p. L14

kovaz.cz

kovaz.cz

How to order Ferulok® fittings

	1	2	3	4	5	6	7	8
Example Order code	**12-8**	**FB**				**U**		**S**

1 Order codes for tube and port thread ends

Dash Size	Tube Size (inch)	Tube Size (mm)	Port Thread Size (inch) BSPP/BSPT/NPT	Port Thread Size UN / UNF
4	1/4	6	1/4	7/16-20
5				1/2-20
6	3/8	8,10	3/8	9/16-18
8	1/2	12	1/2	3/4-16
10	5/8	14,15,16	5/8	7/8-14
12	3/4	18,20	3/4	1 1/6-12
14				1 3/6-12
16	1	25	1	1 5/6-12
20	1 1/4	28,30,32	1 1/4	1 5/8-12
24	1 1/2	35,38	1 1/2	1 7/8-12
32	2	50	2	2 1/2-12

Example:
stud adaptor with nut and ferrule - 3/4" tube to 1/2" NPT port 12-8 FBU-S

2 Codes for fitting styles/shapes

Code	Description
AE6	Straight Thread Swivel
B	Nut
C	Male Stud elbow
CC	Extended Male Stud elbow
C6	Swivel Nut Elbow
E	Union elbow
F	Male Stud connector
FF	Extended Male Stud connector
F6	Male Stud Swivel
FN	Cap
FNLBAS	Bleed Adapter Cap
G	Female Connector
H	Straight union
H6	Swivel/Swivel Adapter
J	Union Tee
K	Union Cross
LOHB3	Braze Adapter
LOHX6	Triple-Lok® Swivel/O-Lok® adaptor
M	Female Run Tee
O	Female Branch Tee
PN	Plug
PNLOBA	Bleed Adapter Plug
R	Male Stud Run Tee
R6	Swivel Run Tee
S	Male Stud Branch Tee
S6	Swivel Branch Tee
SBR	Braze Ring
TPL	Parflange® sleeve
TL	Brazed sleeve
TR	Tube End Reducer
TT	Test Point Adapter
TW3	Weld Nipple
V	45° male stud elbow
V6	Swivel Nut 45° Elbow
W	Bulkhead Union
WE	Bulkhead Union Elbow
WJJ	Bulkhead Run Tee
WJT	Bulkhead Branch Tee
WLNML	Bulkhead Locknut
WN	Bulkhead 45° union elbow
XHL6	Triple Lok®/Swivel O-Lok® adaptor
XHLO	Triple Lok®/O-Lok® male adaptor

3 Threads and sealing methods

Code	Description
None	NPT/NPTF Thread
3	BSPT Thread
4	BSPP Thread O-Ring & Retainer Ring
42	BSPP Thread EOLASTIC seal 'ED'
5	UN/UNF Thread (O-Ring Seal)
8	Metric Thread O-Ring & Retainer Ring
82	Metric Thread EOLASTIC seal 'ED'
87	Metric ISO 6149 Thread (O-Ring Seal)
63	Swivel Connector BSPT end
64	Swivel Connector BSPP end (O-Ring & Retainer Ring)
642	Swivel Connector BSPP end (EOLASTIC Seal 'ED')
65	Swivel Connector UN/UNF end (O-Ring seal)
68	Swivel Connector Metric end (O-Ring & Retainer Ring)
682	Swivel Connector Metric end (EOLASTIC Seal 'ED')
687	Swivel Connector Metric ISO 6149 end

4 Stud connector seal

Code	Description
O	O-Ring Seal (Assembled on fitting)
ED	Captive EOLASTIC Seal (Assembled on fitting)
No Code	No Seal (O-Ring not assembled on fitting)

5 Hexagon/ Across flats style

Code	Description
M	Metric Hexagon Dimension
No Code	inch Hexagon Dimension

6 Fitting type

Code	Description
U	Parker Ferulok®

7 Tube connection seal ORFS

Code	Description
O	O-Ring Seal (Assembled on Fitting)
No Code	No Seal/O-Ring

8 Fitting material

Code	Description
S	Steel
SS	Stainless Steel
B	Brass

Kovalcz

BU Nut

Flareless
SAE 080110

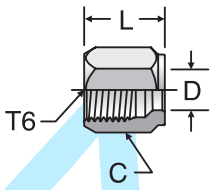

Tube O.D. inch	Thread UN/UNF-2B T6	Hex C inch	Drill D inch	L inch	Weight steel g/1 piece	Ferulok® steel	Ferulok® stainless steel
1/8	5/16-24	3/8	0.13	0.53	5	**2 BU-S**	**2 BU-SS**
3/16	3/8-24	7/16	0.19	0.61	5	**3 BU-S**	**3 BU-SS**
1/4	7/16-20	9/16	0.26	0.70	14	**4 BU-S**	**4 BU-SS**
3/8	9/16-18	11/16	0.38	0.75	18	**6 BU-S**	**6 BU-SS**
1/2	3/4-16	7/8	0.51	0.84	32	**8 BU-S**	**8 BU-SS**
5/8	7/8-14	1	0.63	0.92	41	**10 BU-S**	**10 BU-SS**
3/4	1 1/16-12	1 1/4	0.76	0.97	73	**12 BU-S**	**12 BU-SS**
1	1 5/16-12	1 1/2	1.01	1.05	104	**16 BU-S**	**16 BU-SS**
1 1/4	1 5/8-12	2	1.26	1.05	222	**20 BU-S**	**20 BU-SS**
1 1/2	1 7/8-12	2 1/4	1.51	1.03	254	**24 BU-S**	**24 BU-SS**

TU Ferrule

Flareless
SAE 08115A

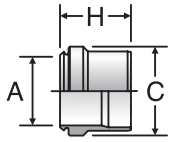

Tube O.D. inch	C inch	A inch	H inch	Ferulok® steel	Ferulok® stainless steel
1/8	0.24	0.13	0.29	**2 TU-S**	**2 TU-SS**
3/16	0.31	0.19	0.33	**3 TU-S**	**3 TU-SS**
1/4	0.37	0.26	0.36	**4 TU-S**	**4 TU-SS**
3/8	0.5	0.38	0.39	**6 TU-S**	**6 TU-SS**
1/2	0.66	0.51	0.43	**8 TU-S**	**8 TU-SS**
5/8	0.78	0.63	0.44	**10 TU-S**	**10 TU-SS**
3/4	0.93	0.76	0.48	**12 TU-S**	**12 TU-SS**
1	1.19	1.01	0.48	**16 TU-S**	**16 TU-SS**
1 1/4	1.45	1.26	0.48	**20 TU-S**	**20 TU-SS**
1 1/2	1.69	1.51	0.48	**24 TU-S**	**24 TU-SS**

HBU Union

Flareless / Flareless
SAE 080101

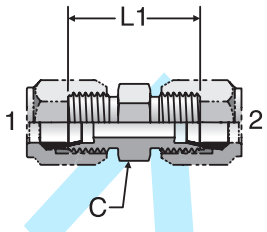

Tube O.D. End 1 inch	Tube O.D. End 2 inch	Hex C inch	L1 inch	Weight steel g/1 piece	Ferulok® steel	Ferulok® stainless steel	Pressure steel bar	Pressure stainless steel bar
1/8	1/8	7/16	1.02	18	**2 HBU-S**	**2 HBU-SS**	413	413
3/16	3/16	7/16	1.11	23	**3 HBU-S**	**3 HBU-SS**	413	413
1/4	1/4	1/2	1.19	41	**4 HBU-S**	**4 HBU-SS**	413	413
3/8	3/8	5/8	1.24	64	**6 HBU-S**	**6 HBU-SS**	413	413
1/2	1/2	13/16	1.42	109	**8 HBU-S**	**8 HBU-SS**	345	345
5/8	5/8	15/16	1.61	150	**10 HBU-S**	**10 HBU-SS**	345	345
3/4	3/4	1 1/8	1.81	281	**12 HBU-S**	**12 HBU-SS**	310	310
1	1	1 3/8	1.81	400	**16 HBU-S**	**16 HBU-SS**	276	276
1 1/4	1 1/4	1 11/16	1.89	658	**20 HBU-S**	**20 HBU-SS**	207	207
1 1/2	1 1/2	2	1.96	785	**24 HBU-S**	**24 HBU-SS**	138	138

EBU Union Elbow

Flareless / Flareless
SAE 080201

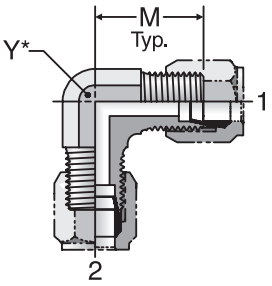

Tube O.D. End 1 inch	Tube O.D. End 2 inch	M inch	Y inch	Weight steel g/1 piece	Ferulok® steel	Ferulok® stainless steel	Pressure steel bar	Pressure stainless steel bar
1/4	1/4	0.89	7/16	50	**4 EBU-S**	**4 EBU-SS**	345	345
3/8	3/8	1.05	9/16	86	**6 EBU-S**	**6 EBU-SS**	345	345
1/2	1/2	1.25	3/4	150	**8 EBU-S**	**8 EBU-SS**	345	345
5/8	5/8	1.42	7/8	218	**10 EBU-S**	**10 EBU-SS**	310	310
3/4	3/4	1.58	1 1/16	350	**12 EBU-S**	**12 EBU-SS**	276	276
1	1	1.73	1 5/16	518	**16 EBU-S**	**16 EBU-SS**	207	207
1 1/4	1 1/4	1.89	1 5/8	981	**20 EBU-S**	**20 EBU-SS**	172	172
1 1/2	1 1/2	2.02	1 7/8	1189	**24 EBU-S**	**24 EBU-SS**	138	138

JBU Union Tee

Flareless (all three ends)
SAE 080401

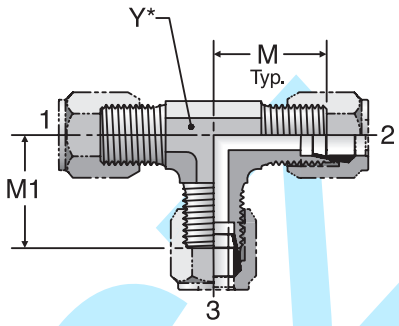

Tube O.D. End 1 inch	Tube O.D. End 2 inch	Tube O.D. End 3 inch	M inch	M1 inch	Y inch	Weight steel g/1 piece	Ferulok® steel	Ferulok® stainless steel	Pressure steel bar	Pressure stainless steel bar
1/4	1/4	1/4	0.89	0.89	7/16	77	**4 JBU-S**	**4 JBU-SS**	345	345
3/8	3/8	3/8	1.05	1.05	9/16	123	**6 JBU-S**	**6 JBU-SS**	345	345
1/2	1/2	1/2	1.25	1.25	3/4	104	**8 JBU-S**	**8 JBU-SS**	345	345
5/8	5/8	5/8	1.42	1.42	7/8	300	**10 JBU-S**	**10 JBU-SS**	310	310
3/4	3/4	3/4	1.58	1.58	1 1/16	518	**12 JBU-S**	**12 JBU-SS**	276	276
1	1	1	1.73	1.73	1 5/16	713	**16 JBU-S**	**16 JBU-SS**	207	207
1 1/4	1 1/4	1 1/4	1.89	1.89	1 5/8	1312	**20 JBU-S**	**20 JBU-SS**	172	172
1 1/2	1 1/2	1 1/2	2.02	2.02	1 7/8	1580	**24 JBU-S**	**24 JBU-SS**	138	138

WBU Bulkhead Union

Flareless / Flareless
SAE 080601

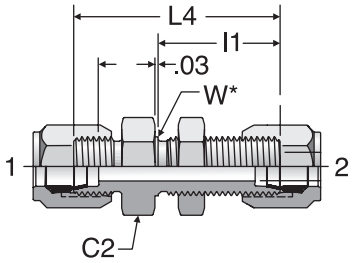

Tube O.D. End 1 inch	Tube O.D. End 2 inch	Hex C2 inch	I1 inch	L4 inch	W inch	Weight steel g/1 piece	Ferulok® steel	Ferulok® stainless steel	Pressure steel bar	Pressure stainless steel bar
1/4	1/4	11/16	1.12	1.89	0.44	68.10	**4 WBU-S**	**4 WBU-SS**	413	413
3/8	3/8	13/16	1.17	1.98	0.56	108.96	**6 WBU-S**	**6 WBU-SS**	413	413
1/2	1/2	1	1.31	2.22	0.75	167.98	**8 WBU-S**	**8 WBU-SS**	345	345
5/8	5/8	1 1/8	1.45	2.48	0.88	222.46	**10 WBU-S**	**10 WBU-SS**	345	345
3/4	3/4	1 3/8	1.55	2.72	1.06	372.28	**12 WBU-S**	**12 WBU-SS**	310	310
1	1	1 5/8	1.56	2.72	1.31	499.40	**16 WBU-S**	**16 WBU-SS**	276	276

C6BU Swivel Nut Elbow

Flareless / Flareless Swivel
SAE 080221

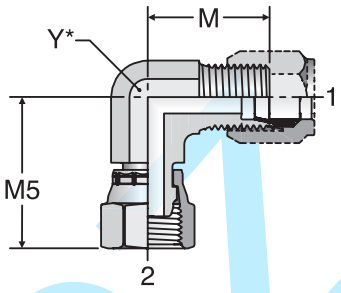

Tube O.D. End 1 inch	Tube O.D. End 2 inch	M inch	M5 inch	Y inch	Weight steel g/1 piece	Ferulok® steel	Ferulok® stainless steel	Pressure steel bar	Pressure stainless steel bar
1/4	1/4	0.89	1.00	7/16	36	**4 C6BU-S**	**4 C6BU-SS**	345	345
3/8	3/8	1.05	1.25	9/16	64	**6 C6BU-S**	**6 C6BU-SS**	345	345
1/2	1/2	1.25	1.38	3/4	114	**8 C6BU-S**	**8 C6BU-SS**	345	345
5/8	5/8	1.42	1.62	7/8	159	**10 C6BU-S**	**10 C6BU-SS**	310	310
3/4	3/4	1.58	1.75	1 1/16	254	**12 C6BU-S**	**12 C6BU-SS**	276	276
1	1	1.73	2.00	1 5/16	381	**16 C6BU-S**	**16 C6BU-SS**	207	207
1 1/4	1 1/4	1.89	2.31	1 5/8	518	**20 C6BU-S**	**20 C6BU-SS**	172	172
1 1/2	1 1/2	2.02	2.42	1 7/8	531	**24 C6BU-S**	**24 C6BU-SS**	138	138

S6BU Swivel Nut Branch Tee

Flareless / Flareless Swivel
SAE 080202

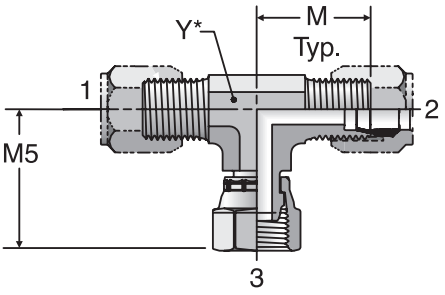

Tube O.D. End 1 inch	Tube O.D. End 2 inch	Tube O.D. End 3 inch	M inch	M5 inch	Y inch	Weight steel g/1 piece	Ferulok® steel	Ferulok® stainless steel	Pressure steel bar	Pressure stainless steel bar
1/4	1/4	1/4	0.89	1.00	7/16	59	**4 S6BU-S**	**4 S6BU-SS**	345	345
3/8	3/8	3/8	1.05	1.25	9/16	95	**6 S6BU-S**	**6 S6BU-SS**	345	345
1/2	1/2	1/2	1.25	1.38	3/4	173	**8 S6BU-S**	**8 S6BU-SS**	345	345
3/4	3/4	3/4	1.58	1.75	1 1/16	390	**12 S6BU-S**	**12 S6BU-SS**	276	276
1	1	1	1.73	2.00	1 5/16	454	**16 S6BU-S**	**16 S6BU-SS**	207	207

R6BU Swivel Nut Run Tee

Flareless / Flareless Swivel
SAE 080432

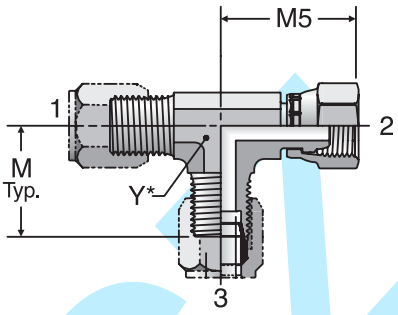

Tube O.D. End 1 inch	Tube O.D. End 2 inch	Tube O.D. End 3 inch	M inch	M5 inch	Y inch	Weight steel g/1 piece	Ferulok® steel	Ferulok® stainless steel	Pressure steel bar	Pressure stainless steel bar
1/4	1/4	1/4	0.89	1.00	7/16	59	**4 R6BU-S**	**4 R6BU-SS**	345	345
3/8	3/8	3/8	1.05	1.25	9/16	100	**6 R6BU-S**	**6 R6BU-SS**	345	345
1/2	1/2	1/2	1.25	1.38	3/4	177	**8 R6BU-S**	**8 R6BU-SS**	345	345
3/4	3/4	3/4	1.58	1.75	1 1/16	495	**12 R6BU-S**	**12 R6BU-SS**	276	276
1	1	1	1.73	2.00	1 5/16	826	**16 R6BU-S**	**16 R6BU-SS**	207	207

TRBU Tube End Reducer

Tube / Flareless
SAE 080123

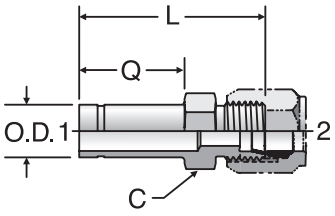

Tube O.D. End 1 inch	Tube O.D. End 2 inch	Hex C inch	L inch	Q inch	Weight steel g/1 piece	Ferulok® steel	Ferulok® stainless steel	Pressure steel bar	Pressure stainless steel bar
3/8	1/4	1/2	1.61	0.88	27	**6-4 TRBU-S**	**6-4 TRBU-SS**	413	413
1/2	1/4	9/16	1.73	1	36	**8-4 TRBU-S**	**8-4 TRBU-SS**	345	345
1/2	3/8	5/8	1.77	1	45	**8-6 TRBU-S**	**8-6 TRBU-SS**	345	345
5/8	3/8	11/16	1.86	1.09	54	**10-6 TRBU-S**	**10-6 TRBU-SS**	345	345
5/8	1/2	13/16	1.95	1.09	73	**10-8 TRBU-S**	**10-8 TRBU-SS**	310	310
3/4	3/8	13/16	1.94	1.16	68	**12-6 TRBU-S**	**12-6 TRBU-SS**	310	310
3/4	1/2	13/16	2.03	1.16	77	**12-8 TRBU-S**	**12-8 TRBU-SS**	310	310
3/4	5/8	15/16	2.16	1.16	100	**12-10 TRBU-S**	**12-10 TRBU-SS**	310	310
1	1/2	1 1/16	2.05	1.13	114	**16-8 TRBU-S**	**16-8 TRBU-SS**	276	276
1	5/8	1 1/16	2.11	1.13	132	**16-10 TRBU-S**	**16-10 TRBU-SS**	276	276
1	3/4	1 1/8	2.25	1.13	168	**16-12 TRBU-S**	**16-12 TRBU-SS**	276	276
1 1/4	1	1 3/8	2.28	1.16	250	**20-16 TRBU-S**	**20-16 TRBU-SS**	207	207
1 1/2	3/4	1 5/8	2.45	1.25	268	**24-12 TRBU-S**	**24-12 TRBU-SS**	138	138
1 1/2	1	1 5/8	2.45	1.25	336	**24-16 TRBU-S**	**24-16 TRBU-SS**	138	138
1 1/2	1 1/4	1 7/8	2.45	1.25	440	**24-20 TRBU-S**	**24-20 TRBU-SS**	138	138

F5BU Straight Thread Connector

Flareless / SAE-ORB
SAE 080120

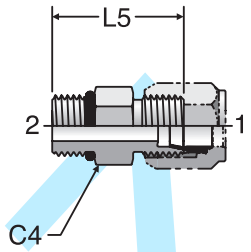

End 1 inch	End 2 UN/UNF-2A inch	Hex C4 inch	L5 inch	Weight steel g/1 piece	Ferulok® steel	Ferulok® stainless steel	Pressure steel bar	Pressure stainless steel bar
1/4	7/16-20	9/16	1.13	27	**4 F5BU-S**	**4 F5BU-SS**	413	413
3/8	9/16-18	11/16	1.22	50	**6 F5BU-S**	**6 F5BU-SS**	413	413
1/2	3/4-16	7/8	1.38	82	**8 F5BU-S**	**8 F5BU-SS**	345	345
5/8	7/8-14	1	1.56	109	**10 F5BU-S**	**10 F5BU-SS**	345	345
3/4	1 1/16-12	1 1/4	1.78	195	**12 F5BU-S**	**12 F5BU-SS**	310	310
1	1 5/16-12	1 1/2	1.81	250	**16 F5BU-S**	**16 F5BU-SS**	276	276

kovaz.cz

FBU Male Connector

Flareless / NPTF
SAE 080102

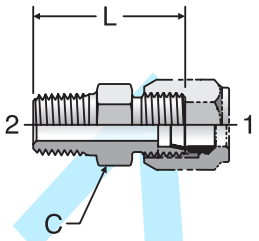

End 1 inch	End 2 NPTF inch	Hex C inch	L inch	Weight steel g/1 piece	Ferulok® steel	Ferulok® stainless steel	Pressure steel bar	Pressure stainless steel bar
1/8	1/8-27	7/16	1.04	18	**2 FBU-S**	**2 FBU-SS**	413	413
1/8	1/4-18	9/16	1.24	32	**2-4 FBU-S**	**2-4 FBU-SS**	413	413
1/4	1/8-27	1/2	1.12	27	**4 FBU-S**	**4 FBU-SS**	413	413
1/4	1/4-18	9/16	1.32	36	**4-4 FBU-S**	**4-4 FBU-SS**	413	413
1/4	3/8-18	3/4	1.33	36	**4-6 FBU-S**	**4-6 FBU-SS**	413	413
1/4	1/2-14	7/8	1.58	64	**4-8 FBU-S**	**4-8 FBU-SS**	413	413
3/8	1/4-18	5/8	1.34	45	**6 FBU-S**	**6 FBU-SS**	413	413
3/8	1/8-27	5/8	1.15	45	**6-2 FBU-S**	**6-2 FBU-SS**	413	413
3/8	3/8-18	3/4	1.35	59	**6-6 FBU-S**	**6-6 FBU-SS**	413	413
3/8	1/2-14	15/16	1.6	91	**6-8 FBU-S**	**6-8 FBU-SS**	413	413
1/2	3/8-18	13/16	1.44	77	**8 FBU-S**	**8 FBU-SS**	345	345
1/2	1/4-18	13/16	1.44	73	**8-4 FBU-S**	**8-4 FBU-SS**	345	345
1/2	1/2-14	7/8	1.69	100	**8-8 FBU-S**	**8-8 FBU-SS**	345	345
1/2	3/4-14	1 1/8	1.76	118	**8-12 FBU-S**	**8-12 FBU-SS**	276	276
3/4	3/4-14	1 1/8	1.88	182	**12 FBU-S**	**12 FBU-SS**	276	276
3/4	1/2-14	1 1/8	1.88	168	**12-8 FBU-S**	**12-8 FBU-SS**	276	276
1	1-11 1/2	1 3/8	2.07	272	**16 FBU-S**	**16 FBU-SS**	207	207
1	3/4-14	1 3/8	1.88	236	**16-12 FBU-S**	**16-12 FBU-SS**	207	207
1 1/4	1 1/4-11 1/2	1 11/16	2.18	499	**20 FBU-S**	**20 FBU-SS**	172	172
1 1/2	1 1/2-1 11 1/2	2	2.28	499	**24 FBU-S**	**24 FBU-SS**	172	172

Kovalcol

C5BU Straight Thread Elbow

Flareless / SAE-ORB
SAE 080220

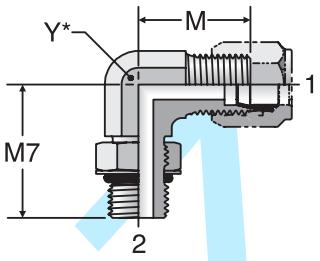

End 1 inch	End 2 UN/UNF-2A inch	M inch	M7 inch	Y inch	Weight steel g/1 piece	Ferulok® steel	Ferulok® stainless steel	Pressure steel bar	Pressure stainless steel bar
1/4	7/16-20	0.89	1.03	7/16	36	**4 C5BU-S**	**4 C5BU-SS**	345	345
3/8	916-18	1.05	1.25	9/16	59	**6 C5BU-S**	**6 C5BU-SS**	345	345
1/2	3/4-16	1.25	1.45	3/4	132	**8 C5BU-S**	**8 C5BU-SS**	345	345
5/8	7/8-14	1.42	1.70	7/8	191	**10 C5BU-S**	**10 C5BU-SS**	310	310
3/4	1 1/16-12	1.58	1.94	1 1/16	263	**12 C5BU-S**	**12 C5BU-SS**	276	276
1	1 5/16-12	1.73	2.05	1 5/16	463	**16 C5BU-S**	**16 C5BU-SS**	207	207
1 1/4	1 5/8-12	1.89	2.25	1 5/8	772	**20 C5BU-S**	**20 C5BU-SS**	172	172
1 1/2	1 7/8-12	2.02	2.39	1 7/8	944	**24 C5BU-S**	**24 C5BU-SS**	138	138

CBU Male Elbow

Flareless / NPTF
SAE 080202

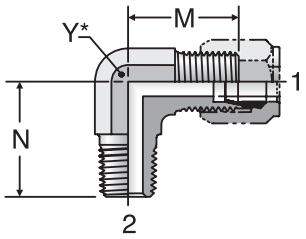

End 1 inch	End 2 NPTF inch	M inch	N inch	Y inch	Weight steel g/1 piece	Ferulok® steel	Ferulok® stainless steel	Pressure steel bar	Pressure stainless steel bar
1/4	1/8-27	0.89	0.78	7/16	36	**4 CBU-S**	**4 CBU-SS**	345	345
3/8	1/4-18	1.05	1.09	9/16	64	**6 CBU-S**	**6 CBU-SS**	345	345
3/8	3/8-18	1.14	1.22	3/4	95	**6-6 CBU-S**	**6 CBU-SS**	345	345
1/2	3/8-18	1.25	1.22	3/4	114	**8 CBU-S**	**8 CBU-SS**	345	345
1/2	1/2-14	1.35	1.47	7/8	149	**8-8 CBU-S**	**8-8CBU-SS**	345	345
5/8	1/2-14	1.42	1.47	7/8	168	**10 CBU-S**	**10 CBU-SS**	310	310
3/4	3/4-14	1.58	1.59	1 1/16	272	**12 CBU-S**	**12 CBU-SS**	276	276
1	1-11 1/2	1.73	1.97	1 5/16	413	**16 CBU-S**	**16 CBU-SS**	207	207
1 1/4	1 1/4-11 1/2	1.89	2.38	1 5/8	754	**20 CBU-S**	**20 CBU-SS**	172	172
1 1/2	1 1/2-11 1/2	2.02	2.64	1 7/8	926	**24 CBU-S**	**24 CBU-SS**	172	172

GBU Female Connector

Flareless / NPTF
SAE 080103

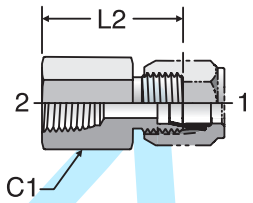

End 1 inch	End 2 inch	Hex C1 inch	L2 inch	Weight steel g/1 piece	Ferulok® steel	Ferulok® stainless steel	Pressure steel bar	Pressure stainless steel bar
1/4	1/8-27	9/16	1.09	32	**4 GBU-S**	**4 GBU-SS**	345	345
3/8	1/4-18	3/4	1.31	59	**6 GBU-S**	**6 GBU-SS**	345	345
1/2	3/8-18	7/8	1.47	91	**8 GBU-S**	**8 GBU-SS**	345	345
5/8	1/2-14	1 1/8	1.77	159	**10 GBU-S**	**10 GBU-SS**	310	310
3/4	3/4-14	1 3/8	1.89	250	**12 GBU-S**	**12 GBU-SS**	276	276
1	1-11 1/2	1 5/8	2.13	359	**16 GBU-S**	**16 GBU-SS**	207	207
1 1/4	1 1/4-11 1/2	2	2.22	636	**20 GBU-S**	**20 GBU-SS**	172	172
1 1/2	1 1/2-11 1/2	2 3/8	2.23	667	**24 GBU-S**	**24 GBU-SS**	172	172

FNU Cap

Flareless Swivel
SAE 080112

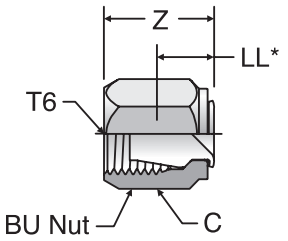

Tube O.D. inch	T6UN/UNF-2B inch	Hex C inch	LL inch	Z inch	Weight steel g/1 piece	Ferulok® steel	Ferulok® stainless steel
1/4	7/16-24	9/16	0.36	0.73	4.54	**4 FNU-S**	**4 FNU-SS**
3/8	916-18	11/16	0.42	0.80	13.62	**6 FNU-S**	**6 FNU-SS**
1/2	3/4-16	7/8	0.44	0.87	27.24	**8 FNU-S**	**8 FNU-SS**
5/8	7/8-14	1	0.47	0.98	40.86	**10 FNU-S**	**10 FNU-SS**
3/4	1 1/16-12	1 1/4	0.48	1.00	59.02	**12 FNU-S**	**12 FNU-SS**
1	1 5/16-12	1 1/2	0.58	1.08	72.64	**16 FNU-S**	**16 FNU-SS**
1 1/4	1 5/8-12	2	0.64	1.11	104.42	**20 FNU-S**	**20 FNU-SS**

PNU Plug

Flareless
SAE 080109

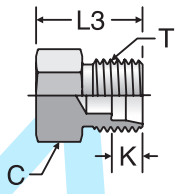

Tube O.D. inch	T Tube End UN/UNF 2A inch	Hex C inch	K inch	L3 inch	Weight steel g/1 piece	Ferulok® steel	Ferulok® stainless steel	Pressure steel bar	Pressure stainless steel bar
1/4	7/16-20	1/2	0.24	0.72	9	**4 PNU-S**	**4 PNU-SS**	413	413
3/8	9/16-18	5/8	0.26	0.75	18	**6 PNU-S**	**6 PNU-SS**	413	413
1/2	3/4-16	13/16	0.31	0.84	36	**8 PNU-S**	**8 PNU-SS**	345	345
5/8	7/8-14	15/16	0.36	0.97	54	**10 PNU-S**	**10 PNU-SS**	345	345
3/4	1 1/16-12	1 1/8	0.36	1.09	91	**12 PNU-S**	**12 PNU-SS**	310	310
1	1 5/16-12	1 3/8	0.42	1.09	168	**16 PNU-S**	**16 PNU-SS**	276	276

kovaz.cz

Ermeto Original
Weld fittings

Visual index

Tube to weld	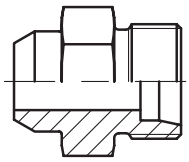 **AS** p. M3 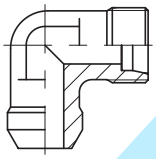 **WAS** p. M4
Weld fitting	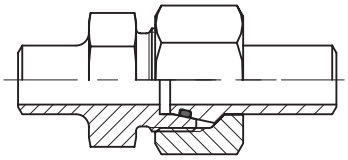 **ASK** p. M5
Weld bulkhead	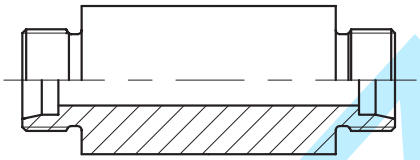 **ESV** p. M6
Weld nipple	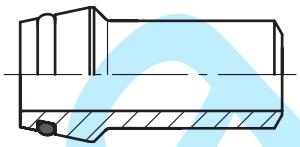 **SKA** p. M7 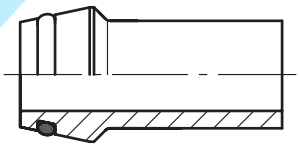 **SKA-ORB** p. M10
Reducing weld nipple	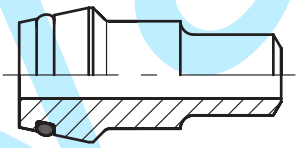 **SKAR** p. M8/9
Tube bend weld nipple	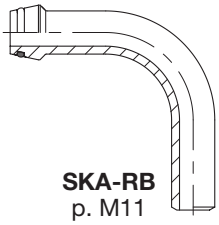 **SKA-RB** p. M11
O-ring	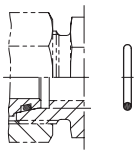 **O-ring** p. M12

kovaz.cz

AS Weld connector

Butt weld / EO 24° cone end

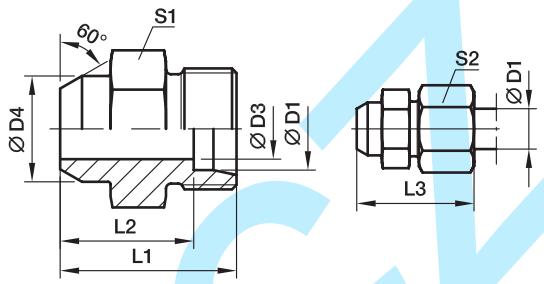

Series	D1	D3	D4	L1	L2	L3	S1	S2	Weight g/1 piece	Order code	PN (bar)[1] Steel	PN (bar)[1] Stainless Steel
L[3]	06	4	10	21	14.0	29	12	14	11	**AS06L**	315	315
	08	6	12	23	16.0	31	14	17	15	**AS08L**	315	315
	10	8	14	25	18.0	33	17	19	22	**AS10L**	315	315
	12	10	16	25	18.0	33	19	22	25	**AS12L**	315	315
	15	12	19	29	22.0	37	22	27	44	**AS15L**	315	315
	18	15	22	31	23.5	40	27	32	67	**AS18L**	315	315
	22	19	27	36	28.5	45	32	36	98	**AS22L**	160	160
	28	24	32	38	30.5	47	41	41	165	**AS28L**	160	160
	35	30	40	43	32.5	54	46	50	232	**AS35L**	160	160
	42	36	46	46	35.0	58	55	60	342	**AS42L**	160	160
S[4]	06	4	11	26	19.0	34	14	17	21	**AS06S**	630	630
	08	5	13	28	21.0	36	17	19	31	**AS08S**	630	630
	10	7	15	30	22.5	39	19	22	41	**AS10S**	630	630
	12	8	17	32	24.5	41	22	24	93	**AS12S**	630	630
	16	12	21	35	26.5	45	27	30	82	**AS16S**	400	400
	20	16	26	40	29.5	51	32	36	131	**AS20S**	400	400
	25	20	31	44	32.0	56	41	46	219	**AS25S**	400	400
	30	25	36	49	35.5	62	46	50	297	**AS30S**	400	400
	38	32	44	54	38.0	69	55	60	448	**AS38S**	315	315

[1] Pressure shown = item deliverable

[3] L = light series; [4] S = heavy series

$\frac{\text{PN (bar)}}{10}$ = PN (MPa)

Delivery without nut and ring. Information on ordering complete fittings or alternative sealing materials see page I7.

*Please add the **suffixes** below according to the material/ surface required.

Order code suffixes		
Material	Suffix surface and material	Example
Steel		AS16SX
Stainless Steel	71X	AS16S71X

M

WAS Weld elbow

Butt weld / EO 24° cone end

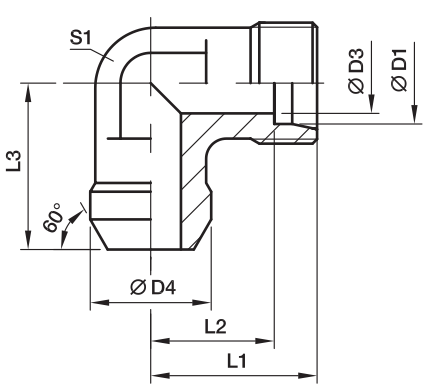

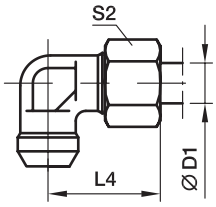

Series	D1	D3	D4	L1	L2	L3	L4	S1	S2	Weight g/1 piece	Order code	PN (bar)[1] Steel	PN (bar)[1] Stainless Steel
L[3]	06	4	10	19	12.0	19	27	12	14	20	**WAS06L**	315	315
	08	6	12	21	14.0	23	29	12	17	25	**WAS08L**	315	315
	10	8	14	22	15.0	24	30	14	19	34	**WAS10L**	315	315
	12	10	16	24	17.0	25	32	17	22	45	**WAS12L**	315	315
	15	12	19	28	21.0	30	36	19	27	81	**WAS15L**	315	315
	18	15	22	31	23.5	33	40	24	32	113	**WAS18L**	315	315
	22	19	27	35	27.5	37	44	27	36	151	**WAS22L**	160	160
	28	24	32	38	30.5	42	47	36	41	271	**WAS28L**	160	160
	35	30	40	45	34.5	49	56	41	50	113	**WAS35L**	160	160
	42	36	46	51	40.0	57	63	50	60	420	**WAS42L**	160	160
S[4]	06	4	11	23	16.0	23	31	12	17	31	**WAS06S**	630	630
	08	5	13	24	17.0	24	32	14	19	44	**WAS08S**	630	630
	10	7	15	25	17.5	25	34	17	22	59	**WAS10S**	630	630
	12	8	17	29	21.5	29	38	17	24	78	**WAS12S**	630	630
	16	12	21	33	24.5	33	43	24	30	133	**WAS16S**	400	400
	20	16	26	37	26.5	37	48	27	36	192	**WAS20S**	400	400
	25	20	31	42	30.0	42	54	36	46	351	**WAS25S**	400	400
	30	25	36	49	35.5	49	62	41	50	525	**WAS30S**	400	400
	38	32	44	57	41.0	57	72	50	60	785	**WAS38S**	315	315

[1]) Pressure shown = item deliverable

[3]) L = light series; [4]) S = heavy series

$\frac{\text{PN (bar)}}{10}$ = PN (MPa)

Delivery without nut and ring. Information on ordering complete fittings or alternative sealing materials see page I7.

*Please add the **suffixes** below according to the material/ surface required.

Order code suffixes		
Material	Suffix surface and material	Example
Steel		WAS16SX
Stainless Steel	71X	WAS16S71X

ASK Weld fitting for tubes

Butt weld / Butt weld

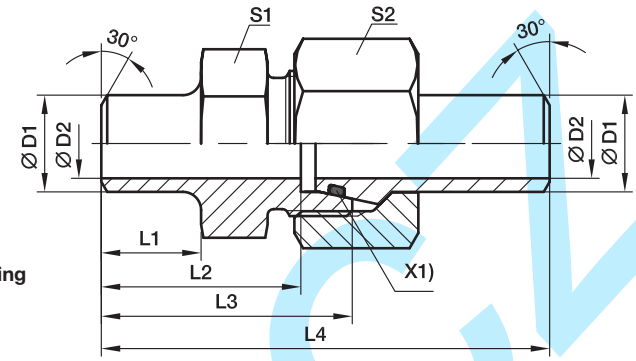

Series	D1	D2	L1	L2	L3	L4	S1	S2	recommended tube	Weight g/1 piece	Order code	PN (bar)[1] Steel	PN (bar)[1] Stainless Steel
S[4]	10	8	10.0	24.5	32.0	58.0	19	22	10×1.0	75	**ASK610X1S**	249	242
	10	7	10.0	24.5	32.0	58.0	19	22	10×1.5	81	**ASK610X1.5S**	358	349
	10	6	10.0	24.5	32.0	58.0	19	22	10×2.0	86	**ASK610X2S**	460	447
	12	9	15.0	29.5	37.0	63.0	22	24	12×1.5	106	**ASK612X1.5S**	305	297
	12	8	15.0	29.5	37.0	63.0	22	24	12×2.0	107	**ASK612X2S**	393	383
	12	7	15.0	29.5	37.0	63.0	22	24	12×2.5	109	**ASK612X2.5S**	476	463
	16	13	16.5	33.0	41.5	73.5	27	30	16×1.5	166	**ASK616X1.5S**	234	228
	16	12	16.5	33.0	41.5	73.5	27	30	16×2.0	175	**ASK616X2S**	305	297
	16	11	16.5	33.0	41.5	73.5	27	30	16×2.5	184	**ASK616X2.5S**	372	362
	16	10	16.5	33.0	41.5	73.5	27	30	16×3.0	193	**ASK616X3S**	400	400
	20	16	19.0	36.5	47.0	83.5	32	36	20×2.0	301	**ASK620X2S**	249	242
	20	15	19.0	36.5	47.0	83.5	32	36	20×2.5	311	**ASK620X2.5S**	305	297
	20	14	19.0	36.5	47.0	83.5	32	36	20×3.0	316	**ASK620X3S**	358	349
	20	12	19.0	36.5	47.0	83.5	32	36	20×4.0	322	**ASK620X4S**	400	400
	25	19	19.5	39.5	51.5	92.5	41	46	25×3.0	551	**ASK625X3S**	294	286
	25	17	19.5	39.5	51.5	92.5	41	46	25×4.0	559	**ASK625X4S**	379	369
	25	15	19.5	39.5	51.5	92.5	41	46	25×5.0	589	**ASK625X5S**	400	400
	30	24	23.0	44.5	58.0	101.5	46	50	30×3.0	671	**ASK630X3S**	249	242
	30	22	23.0	44.5	58.0	101.5	46	50	30×4.0	679	**ASK630X4S**	323	314
	30	20	23.0	44.5	58.0	101.5	46	50	30×5.0	726	**ASK630X5S**	393	383
	30	18	23.0	44.5	58.0	101.5	46	50	30×6.0	791	**ASK630X6S**	400	400
	38	30	22.0	44.0	60.0	108.0	55	60	38×4.0	988	**ASK638X4S**	261	254
	38	28	22.0	44.0	60.0	108.0	55	60	38×5.0	1044	**ASK638X5S**	315	311
	38	26	22.0	44.0	60.0	108.0	55	60	38×6.0	1108	**ASK638X6S**	315	315
	38	24	22.0	44.0	60.0	108.0	55	60	38×7.0	1205	**ASK638X7S**	315	315

[1] Pressure shown = item deliverable

[4] S = heavy series

$\frac{PN\ (bar)}{10} = PN\ (MPa)$

*Please add the **suffixes** below according to the material/ surface required.

Order code suffixes			
Material	Suffix surface and material	Example	Standard sealing material (no additonal. suffix needed)
Steel		ASK616X2S	NBR
Stainless Steel	71	ASK616X2S71	VIT

ESV Weld bulkhead fitting

EO 24° cone end / EO 24° cone end

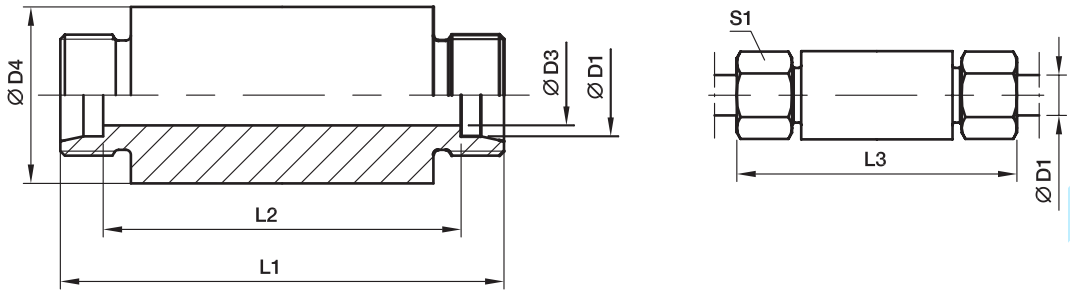

Series	D1	D3	D4	L1	L2	L3	S1	Weight g/1 piece	Order code	PN (bar)[1] Steel	PN (bar)[1] Stainless Steel
L[3]	06	4	18	70	56	85	14	103	**ESV06L**	500	315
	08	6	20	70	56	85	17	121	**ESV08L**	500	315
	10	8	22	72	58	87	19	142	**ESV10L**	500	315
	12	10	25	72	58	87	22	176	**ESV12L**	400	315
	15	12	28	84	70	100	27	262	**ESV15L**	400	315
	18	15	32	84	69	101	32	333	**ESV18L**	400	315
	22	19	36	88	73	105	36	394	**ESV22L**	250	160
	28	24	40	88	73	106	41	448	**ESV28L**	250	160
	35	30	50	92	71	114	50	713	**ESV35L**	250	160
	42	36	60	92	70	115	60	997	**ESV42L**	250	160
S[4]	06	4	20	74	60	89	17	135	**ESV06S**	800	630
	08	5	22	74	60	89	19	163	**ESV08S**	800	630
	10	7	25	74	59	91	22	201	**ESV10S**	800	630
	12	8	28	74	59	91	24	249	**ESV12S**	630	630
	16	12	35	88	71	107	30	441	**ESV16S**	630	400
	20	16	38	92	71	114	36	509	**ESV20S**	420	400
	25	20	45	96	72	120	46	720	**ESV25S**	420	400
	30	25	50	100	73	126	50	873	**ESV30S**	420	400
	38	32	60	104	72	133	60	1248	**ESV38S**	420	315

[1] Pressure shown = item deliverable

[3] L = light series; [4] S = heavy series

$\frac{\text{PN (bar)}}{10}$ = PN (MPa)

Delivery without nut and ring. Information on ordering complete fittings or alternative sealing materials see page I7.

*Please add the **suffixes** below according to the material/ surface required.

Order code suffixes		
Material	Suffix surface and material	Example
Steel		ESV16SX
Stainless Steel	71X	ESV16S71X

SKA Weld nipple

EO 24° O-ring weld nipple / butt weld

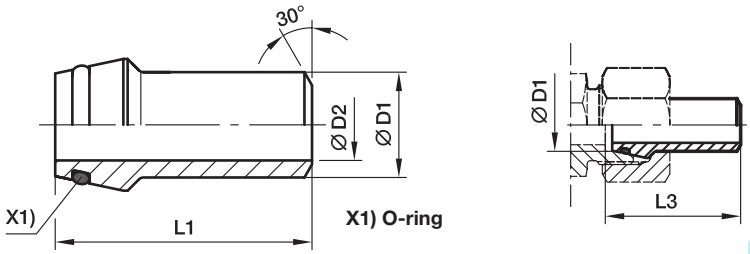

Series	D1	D2	L1	L3	recommended tube	Weight g/1 piece	Order code	PN (bar)[1] Steel	PN (bar)[1] Stainless Steel
L[3]/S[4])	06	3.0	31.0	31.5	06×1.5	7	**SKA06X1.5**	528	539
	08	4.5	31.0	31.5	08×1.5	11	**SKA08X1.5**	414	424
	08	4.0	31.0	31.5	08×2.0	11	**SKA08X2**	528	539
	10	8.0	32.5	33.5	10×1.0	13	**SKA10X1**	249	242
	10	7.0	32.5	33.5	10×1.5	13	**SKA10X1.5**	358	349
	10	6.0	32.5	33.5	10×2.0	16	**SKA10X2**	460	447
	12	8.0	32.5	33.5	12×1.5	21	**SKA12X1.5**	305	297
	12	8.0	32.5	33.5	12×2.0	20	**SKA12X2**	393	383
	12	7.0	32.5	33.5	12×2.5	22	**SKA12X2.5**	476	463
L[3])	15	11.0	34.0	34.5	15×2.0	29	**SKA15X2**	315	315
	15	10.0	34.0	34.5	15×2.5	31	**SKA15X2.5**	315	315
	18	13.0	35.5	36.5	18×2.5	40	**SKA18X2.5**	315	315
	22	17.0	38.5	39.5	22×2.5	57	**SKA22X2.5**	160	160
	28	23.0	41.5	42.5	28×2.5	73	**SKA28X2.5**	160	160
	28	22.0	41.5	42.5	28×3.0	89	**SKA28X3**	160	160
	35	28.0	47.5	49.5	35×3.5	140	**SKA35X3.5**	160	160
	35	27.0	47.5	49.5	35×4.0	150	**SKA35X4**	160	160
	42	36.0	47.5	50.0	42×3.0	155	**SKA42X3**	160	160
	42	34.0	47.5	50.0	42×4.0	190	**SKA42X4**	160	160
S[4])	16	13.0	39.0	40.5	16×1.5	32	**SKA16X1.5**	234	228
	16	12.0	39.0	40.5	16×2.0	31	**SKA16X2**	305	297
	16	11.0	39.0	40.5	16×2.5	38	**SKA16X2.5**	372	362
	16	10.0	39.0	40.5	16×3.0	41	**SKA16X3**	400	400
	20	16.0	45.0	47.0	20×2.0	57	**SKA20X2**	249	242
	20	15.0	45.0	47.0	20×2.5	57	**SKA20X2.5**	305	297
	20	14.0	45.0	47.0	20×3.0	64	**SKA20X3**	358	349
	20	13.0	45.0	47.0	20×3.5	71	**SKA20X3.5**	400	400
	20	12.0	45.0	47.0	20×4.0	78	**SKA20X4**	400	400
	25	19.0	49.5	53.0	25×3.0	89	**SKA25X3**	294	286
	25	18.0	49.5	53.0	25×3.5	100	**SKA25X3.5**	337	328
	25	17.0	49.5	53.0	25×4.0	111	**SKA25X4**	379	369
	25	15.0	49.5	53.0	25×5.0	125	**SKA25X5**	400	400
	30	24.0	52.0	57.0	30×3.0	113	**SKA30X3**	249	242
	30	22.0	52.0	57.0	30×4.0	141	**SKA30X4**	323	314
	30	20.0	52.0	57.0	30×5.0	166	**SKA30X5**	393	383
	30	18.0	52.0	57.0	30×6.0	188	**SKA30X6**	400	400
	38	32.0	56.5	64.0	38×3.0	163	**SKA38X3**	200	195
	38	30.0	56.5	64.0	38×4.0	209	**SKA38X4**	261	254
	38	28.0	56.5	64.0	38×5.0	247	**SKA38X5**	315	315
	38	26.0	56.5	64.0	38×6.0	270	**SKA38X6**	315	370
	38	24.0	56.5	64.0	38×7.0	270	**SKA38X7**	315	420

[1]) Pressure shown = item deliverable

[3]) L = light series; [4]) S = heavy series

$\frac{PN\ (bar)}{10}$ = PN (MPa)

*Please add the **suffixes** below according to the material/ surface required.

Order code suffixes			
Material	Suffix surface and material	Example	Standard sealing material (no additonal. suffix needed)
Steel		SKA16X2	NBR
Stainless Steel	71	SKA16X271	VIT

M

SKAR Reducing weld nipple

EO 24° O-ring weld nipple / butt weld

Fig. A

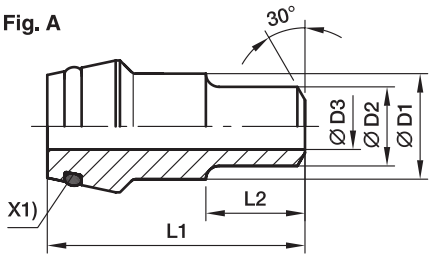

Fig. B

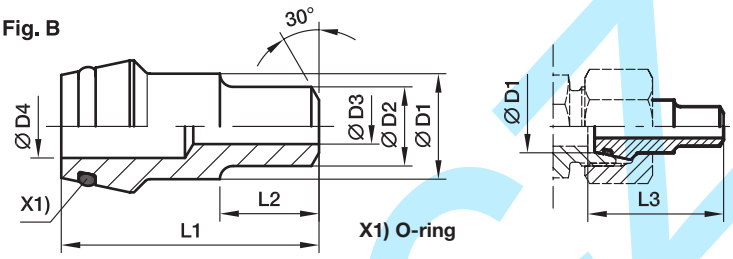

Series	D1	D2	D3	D4	L1	L2	L3	Fig.	Weight g/1 piece	Order code	PN (bar)[1] Steel	PN (bar)[1] Stainless Steel
L[3])/S[4])	08	06	3		31.0	12	31.5	A	14	**SKAR08/06X1.5**	528	539
	10	06	3	5	32.5	12	33.5	B	15	**SKAR10/06X1.5**	528	539
	10	08	5		32.5	12	33.5	A	16	**SKAR10/08X1.5**	414	424
	10	08	4		32.5	12	33.5	A	17	**SKAR10/08X2**	528	539
	12	08	5		32.5	14	33.5	A	18	**SKAR12/08X1.5**	414	424
	12	08	4	6	32.5	14	33.5	B	20	**SKAR12/08X2**	528	539
	12	10	7		32.5	14	33.5	A	18	**SKAR12/10X1.5**	358	349
S[4])	16	10	6		39.0	15	40.5	A	43	**SKAR16/10X2**	400	400
	16	12	9		39.0	15	40.5	A	45	**SKAR16/12X1.5**	305	297
	16	12	8		39.0	15	40.5	A	47	**SKAR16/12X2**	393	383
	16	12	7		39.0	15	40.5	A	49	**SKAR16/12X2.5**	400	400
	20	12	9		45.0	17	47.0	A	76	**SKAR20/12X1.5**	305	297
	20	12	8		45.0	17	47.0	A	78	**SKAR20/12X2**	393	383
	20	12	7		45.0	17	47.0	A	80	**SKAR20/12X2.5**	400	400
	20	12	6		45.0	17	47.0	A	86	**SKAR20/12X3**	400	400
	20	16	12		45.0	17	47.0	A	74	**SKAR20/16X2**	305	297
	20	16	11		45.0	17	47.0	A	76	**SKAR20/16X2.5**	372	362
	20	16	10		45.0	17	47.0	A	78	**SKAR20/16X3**	400	400
	25	12	9		49.5	20	53.0	A	117	**SKAR25/12X1.5**	305	297
	25	12	8		49.5	20	53.0	A	121	**SKAR25/12X2**	393	383
	25	12	7		49.5	20	53.0	A	125	**SKAR25/12X2.5**	400	400
	25	12	6	15	49.5	20	53.0	B	129	**SKAR25/12X3**	400	400
	25	16	12		49.5	20	53.0	A	115	**SKAR25/16X2**	305	297
	25	16	11		49.5	20	53.0	A	120	**SKAR25/16X2.5**	372	362
	25	16	10		49.5	20	53.0	A	123	**SKAR25/16X3**	400	400
	25	20	16		49.5	20	53.0	A	94	**SKAR25/20X2**	249	242
	25	20	15		49.5	20	53.0	A	104	**SKAR25/20X2.5**	305	297
	25	20	14		49.5	20	53.0	A	114	**SKAR25/20X3**	358	349
	25	20	12		49.5	20	53.0	A	124	**SKAR25/20X4**	400	400
	30	12	9	22	52.0	22	57.0	B	135	**SKAR30/12X1.5**	305	297
	30	12	8	22	52.0	22	57.0	B	145	**SKAR30/12X2**	323	383
	30	12	6	22	52.0	22	57.0	B	155	**SKAR30/12X3**	400	400
	30	16	12		52.0	22	57.0	A	166	**SKAR30/16X2**	305	297
	30	16	11		52.0	22	57.0	A	176	**SKAR30/16X2.5**	323	362
	30	20	16		52.0	22	57.0	A	149	**SKAR30/20X2**	249	242
	30	20	15		52.0	22	57.0	A	159	**SKAR30/20X2.5**	305	297
	30	20	14		52.0	22	57.0	A	169	**SKAR30/20X3**	358	349
	30	20	12		52.0	22	57.0	A	184	**SKAR30/20X4**	400	400
	30	25	20		52.0	22	57.0	A	141	**SKAR30/25X2.5**	249	242
	30	25	19		52.0	22	57.0	A	156	**SKAR30/25X3**	294	286
	30	25	17		52.0	22	57.0	A	168	**SKAR30/25X4**	379	369

SKAR Reducing weld nipple

EO 24° O-ring weld nipple / butt weld

Fig. A

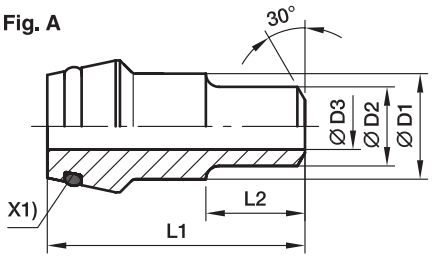

Fig. B

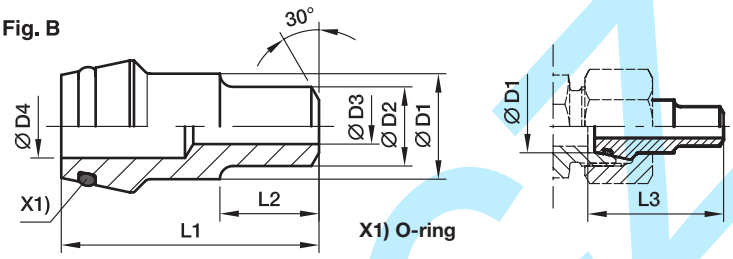

Series	D1	D2	D3	D4	L1	L2	L3	Fig.	Weight g/1 piece	Order code	PN (bar)[1] Steel	PN (bar)[1] Stainless Steel
S[4])	38	12	9	28	56.5	26	64.0	B	219	**SKAR38/12X1.5**	305	297
	38	12	8	28	56.5	26	64.0	B	234	**SKAR38/12X2**	315	315
	38	12	6	28	56.5	26	64.0	B	249	**SKAR38/12X3**	315	315
	38	16	12		56.5	26	64.0	A	279	**SKAR38/16X2**	305	297
	38	16	11		56.5	26	64.0	A	294	**SKAR38/16X2.5**	315	315
	38	16	10		56.5	26	64.0	A	309	**SKAR38/16X3**	315	315
	38	20	16		56.5	26	64.0	A	263	**SKAR38/20X2**	249	242
	38	20	15		56.5	26	64.0	A	278	**SKAR38/20X2.5**	305	297
	38	20	14		56.5	26	64.0	A	293	**SKAR38/20X3**	315	315
	38	20	12		56.5	26	64.0	A	299	**SKAR38/20X4**	315	315
	38	25	20		56.5	26	64.0	A	242	**SKAR38/25X2.5**	249	242
	38	25	19		56.5	26	64.0	A	262	**SKAR38/25X3**	294	286
	38	25	17		56.5	26	64.0	B	285	**SKAR38/25X4**	315	315
	38	30	24		56.5	26	64.0	A	256	**SKAR38/30X3**	249	242
	38	30	22		56.5	26	64.0	A	286	**SKAR38/30X4**	315	315
	38	30	20		56.5	26	64.0	A	316	**SKAR38/30X5**	315	315

[1]) Pressure shown = item deliverable

[3]) L = light series; [4]) S = heavy series

$\frac{\text{PN (bar)}}{10}$ = PN (MPa)

*Please add the **suffixes** below according to the material/ surface required.

Order code suffixes			
Material	Suffix surface and material	Example	Standard sealing material (no additonal. suffix needed)
Steel		SKAR16/12X2	NBR
Stainless Steel	71	SKAR16/12X271	VIT

M

SKA-ORB Weld nipple (orbital)

EO 24° O-ring weld nipple / butt weld (orbital)

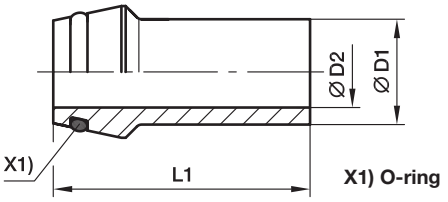

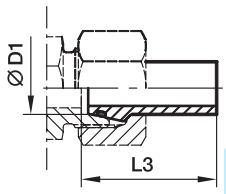

Series	D1	D2	L1	L3	recommended tube	Weight g/1 piece	Order code	PN (bar)[1] Stainless Steel
L[3]/S[4]	10	6.0	37.5	38.5	10×1.5	13	**SKA10X1.5ORB**	358
	12	8.0	37.5	38.5	12×1.5	21	**SKA12X1.5ORB**	305
	12	8.0	37.5	38.5	12×2.0	255	**SKA12X2ORB**	393
L[3]	18	13.0	38.0	39.0	18×2.0	43	**SKA18X2ORB**	290
	22	17.0	38.5	39.5	22×2.0	50	**SKA22X2ORB**	250
	28	22.0	41.5	42.5	28×2.0	69	**SKA28X2ORB**	204
	42	36.0	47.5	50.0	42×3.0	160	**SKA42X3ORB**	182
S[4]	16	12.0	39.0	40.5	16×2.0	310	**SKA16X2ORB**	305
	20	14.0	45.0	47.0	20×3.0	640	**SKA20X3ORB**	358
	25	19.0	49.5	53.0	25×3.0	890	**SKA25X3ORB**	294

[1] Pressure shown = item deliverable

[3] L = light series; [4] S = heavy series

$\frac{PN\ (bar)}{10}$ = PN (MPa)

*Please add the **suffixes** below according to the material/ surface required.

Order code suffixes			
Material	Suffix surface and material	Example	Standard sealing material (no additonal. suffix needed)
Stainless Steel	71	SKA16X2ORB71	VIT

kovaz.si

SKA-RB Tube bend weld nipple

EO 24° O-ring weld nipple / butt weld

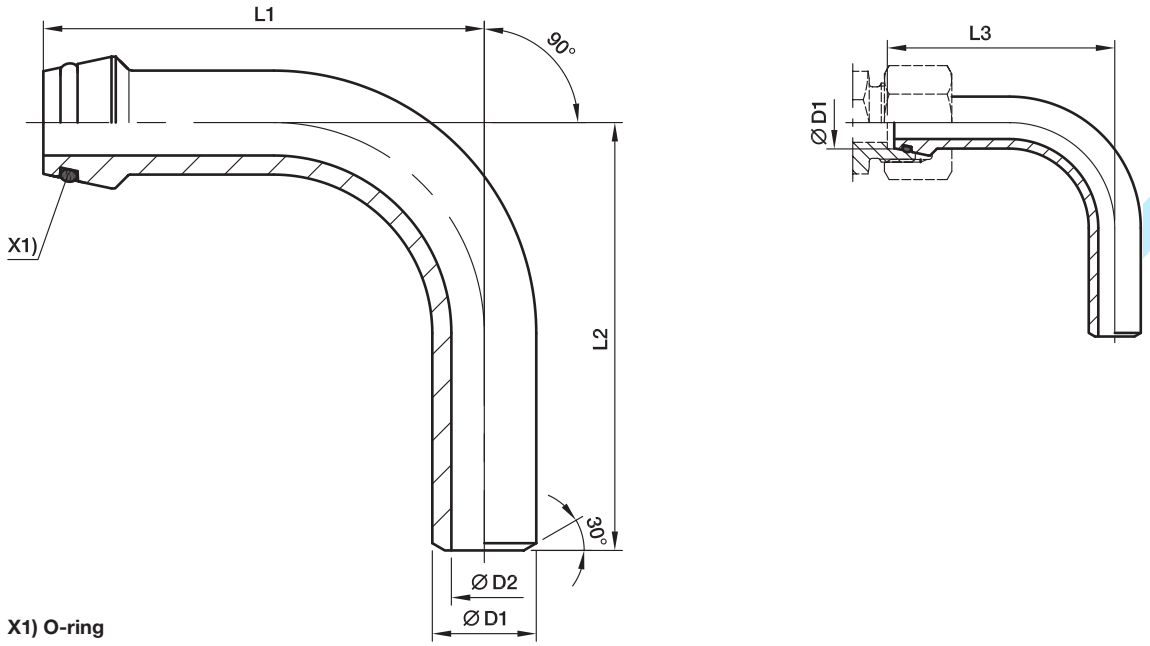

X1) O-ring

Series	D1	D2	L1	L2	L3	recommended tube	Weight g/1 piece	Order code	PN (bar)[1] Steel	PN (bar)[1] Stainless Steel
S[4])	10	6	49	45	50.0	10×2.0	38	**SKA10X2RB**	460	447
	12	7	51	50	52.0	12×2.5	50	**SKA12X2.5RB**	476	463
	16	10	67	60	68.5	16×3.0	105	**SKA16X3RB**	400	400
	20	12	85	65	87.0	20×4.0	217	**SKA20X4RB**	400	400
	25	17	85	85	88.5	25×4.0	295	**SKA25X4RB**	379	369
	25	15	85	85	88.5	25×5.0	353	**SKA25X5RB**	400	400
	30	22	111	110	116.0	30×4.0	469	**SKA30X4RB**	323	314
	30	20	111	110	116.0	30×5.0	568	**SKA30X5RB**	393	383
	38	28	136	130	143.5	38×5.0	876	**SKA38X5RB**	315	315
	38	26	136	130	143.5	38×6.0	1045	**SKA38X6RB**	315	315

[1]) Pressure shown = item deliverable

[4]) S = heavy series

$\frac{\text{PN (bar)}}{10}$ = PN (MPa)

*Please add the **suffixes** below according to the material/ surface required.

Order code suffixes			
Material	Suffix surface and material	Example	Standard sealing material (no additonal. suffix needed)
Steel		SKA16X3RB	NBR
Stainless Steel	71	SKA16X3RB71	VIT

KOVOT

OR O-ring for weld nipple

For Type: SKA, SKAR, SKA-RB

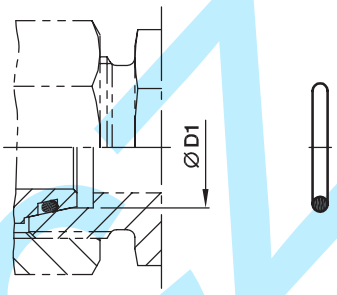

Series	D1	O-ring NBR Shore-Hardness approx. 90	O-ring FKM Shore-Hardness approx. 90
L[3])	06	**OR4.5X1.5X**	**OR4.5X1.5VITX**
	08	**OR6.5X1.5X**	**OR6.5X1.5VITX**
	10	**OR8.5X1.5X**	**OR8X1.5VITX**
	12	**OR10.5X1.5X**	**OR10X1.5VITX**
	15	**OR12.5X1.5X**	**OR12X2VITX**
	18	**OR16X2X**	**OR15X2VITX**
	22	**OR20X2X**	**OR20X2VITX**
	28	**OR26X2X**	**OR26X2VITX**
	35	**OR32X2.5X**	**OR32X2.5VITX**
	42	**OR39X2.5X**	**OR38X2.5VITX**
S[4])	06	**OR4.5X1.5X**	**OR4.5X1.5VITX**
	08	**OR6.5X1.5X**	**OR6.5X1.5VITX**
	10	**OR8.5X1.5X**	**OR8X1.5VITX**
	12	**OR10.5X1.5X**	**OR10X1.5VITX**
	16	**OR14X2X**	**OR13X2VITX**
	20	**OR17X2.5X**	**OR16.3X2.4VITX**
	25	**OR22X2.5X**	**OR20.3X2.4VITX**
	30	**OR27X2.5X**	**OR25.3X2.4VITX**
	38	**OR35X2.5X**	**OR33.3X2.4VITX**

[3]) L = light series; [4]) S = heavy series

kovaz.cz

Parker

Ermeto Original
High Pressure Hydraulic Flanges

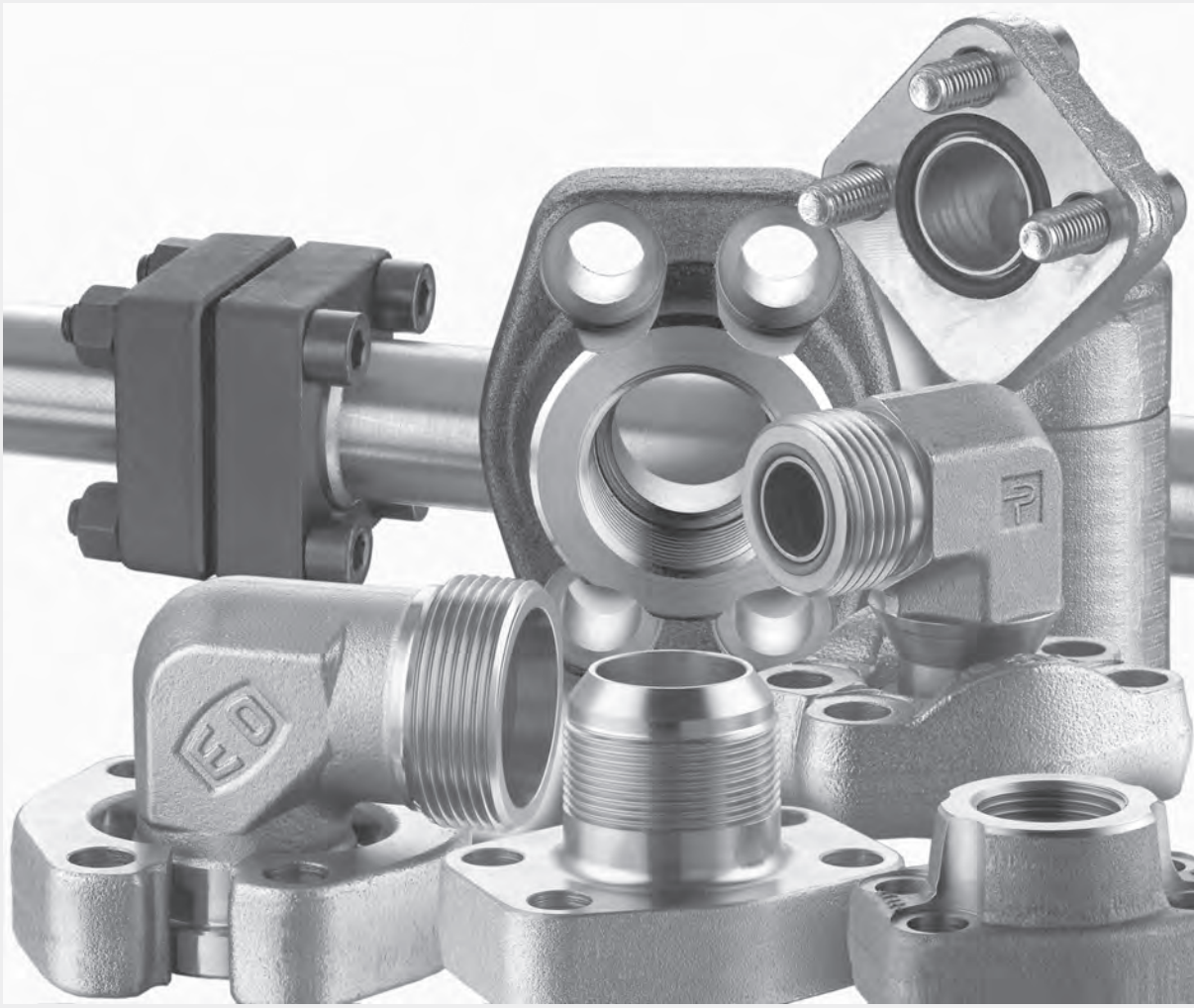

kovaz.cz

Table of contents

Page

Introduction ... 4
Design and construction ... 4
Methods of connection ... 5
How flange connections work ... 6
Assembly of flanges ... 7
Bolt torques for SAE flanges ... 8
Technical data ... 9
Order codes bolts and O-rings ... 10
Features, advantages and benefits ... 11
How to order ... 12
Visual index ... 13
SAE Flanges clamps ... 16
SAE Flange adapters
- EO 24° cone end ... 21
- BSPP 60° cone end ... 25
- Male NPT thread ... 27
- O-Lok® ORFS end ... 28
- Triple-Lok® 37° flare end ... 31
- Butt weld end ... 34
- Socket weld end ... 39

SAE Full flanges
- Female BSPP thread ... 42
- Female NPT thread ... 46
- EO 24° cone end ... 49
- BSPP 60° cone end ... 51
- Triple-Lok® 37° flare end ... 53
- O-Lok® ORFS end ... 55
- Butt weld end ... 57
- Socket weld end ... 60
- Complete flange connections ... 64

SAE Flange accessories ... 67
Gear pump flanges
- EO 24° cone end ... 75
- O-Lok® ORFS end ... 78
- Male/Female BSPP thread ... 80
- Socket weld end ... 82
- Special pump size flanges ... 83
- Aluminium flanges ... 86

ISO 6164 Square flanges ... 88

N

kovaz.cz

Introduction

The 4 bolt flange connections conforming to ISO 6162-1/2 (SAE J518 Code 61/62) and ISO 6164 are proven, leak-free connections, especially suited for larger sizes, high pressures and assembly in tight quarters. Threaded port connections such as SAE straight thread O-ring and ISO 6149 are reasonably easy to assemble and provide 6000 psi and higher pressure capability up to size 12 (M27). Beyond this size the pressure rating starts to decrease and assembly torques increase rapidly.

The 4 bolt flange port connections provide ability to connect larger sizes and achieve higher-pressure capability at reasonable assembly torques. Because of the lower assembly torques compared to an equivalent size threaded port, these connections are well suited for tight quarters where wrench clearances are limited.

Design and construction

Parker 4 bolt flange products are designed to provide different methods of connecting a tube, hose, pipe or another fitting to the SAE standard 4-bolt flange port.

Flange fittings – All Parker flange fittings, except for those with square mounting hole pattern, are designed to conform to O-ring groove, bolt holes and bolt pattern dimensions of either ISO 6162-1 (SAE J518 Code 61), ISO 6162-2 (SAE J518 Code 62) and ISO 6164.

The counter fittings have a flat face (no O-ring groove) and the mounting holes are tapped. Where these fittings are used, the seal is in the mating part (flange adapter, flange hose fitting, flange block fitting, etc.) as shown in Fig. 1.

Dimensions other than the O-ring groove, bolt holes, bolt pattern, and the flange foot print are not governed by any industry standard. However, Parker product design follows common industry practice and sound engineering.

Fig. 1 – Flange pad fitting

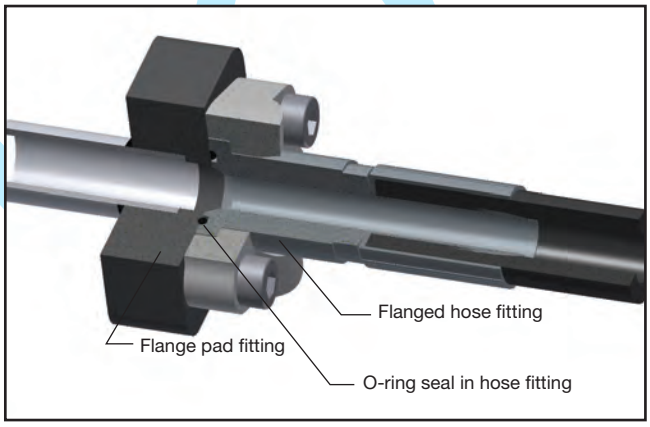

Flange clamps – Clamps are used for providing the holding power to the 4 bolt flange connection. They are offered in split and captive (one-piece) versions. The captive ones are also offered with either drilled or tapped bolt holes. The captive flange clamp with tapped holes is used while connecting a tube to another tube or a hose.

Parker flange clamps are forged for higher strength and durability. They meet all requirements of ISO 6162-1 (SAE J518 Code 61), ISO 6162-2 (SAE J518 Code 62) and ISO 6164. The split clamps make it easy to assemble the connection in close quarters. They also make removal of the flange head component, such as a hose assembly, easy by loosening all four bolts and removing one clamp half.

Connector plate – Connector plate is used as a middle plate to connect two flange heads with O-ring grooves, such as two hose assemblies with flange connection ends. The flat surface of the plate provides sealing surface on each side for the O-ring housed in the hose ends.

Spacer plate – Spacer plate provides access to the system fluid via the gage port on the side. The plate is sandwiched in the flange connection to provide this access.

Plugs – Plugs provide a means to block off the 4 bolt flange port with and without clamps, and to plug the end of a pipe (via welding).

Methods of connection – Parker flange products

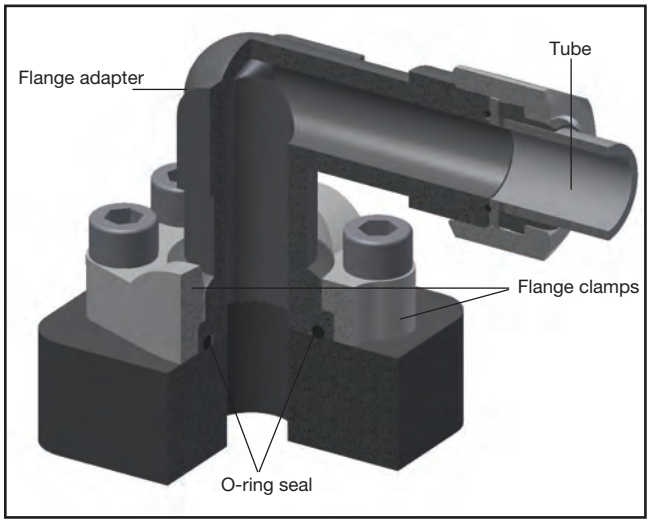

Connecting tube and hose via a threaded tube/hose end connection: The flange adapters provide means of connecting tubes or hoses to a 4 bolt flange port via threaded connection such as Seal-Lok (ORFS), Triple-Lok® (37° flare), etc.

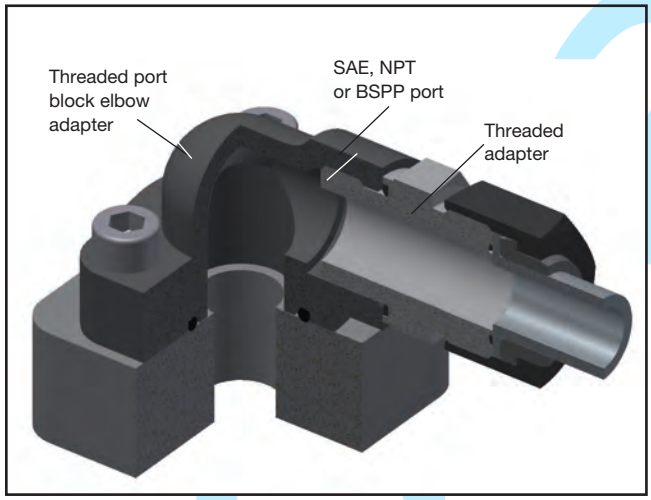

Connecting tube, hose and pipe via threaded port connection. The flange head and flange block conversion adapters provide the means of converting a flange port to either SAE, NPT or BSPP port. A user can then use appropriate threaded adapters to connect tube and hose, or connect threaded pipe directly into NPT and BSPP ports.

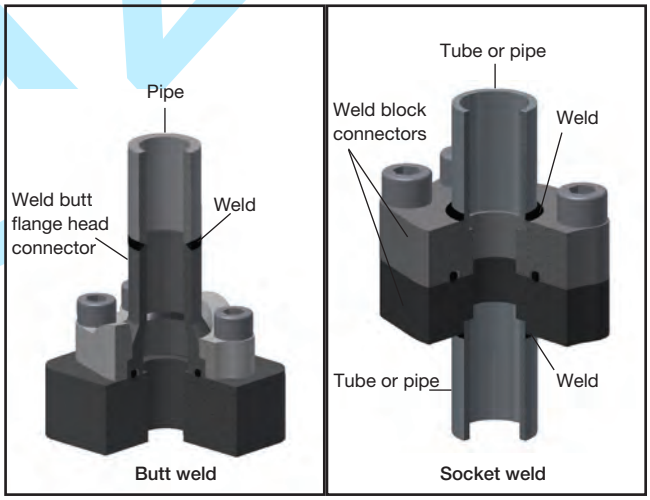

Connecting tube and pipe via welding. The flange head and flange block weld fittings provide the means of connecting tubes and pipes to 4 bolt flange port via socket welding for tubes and socket and butt welding for pipes.

N

How flange connections work

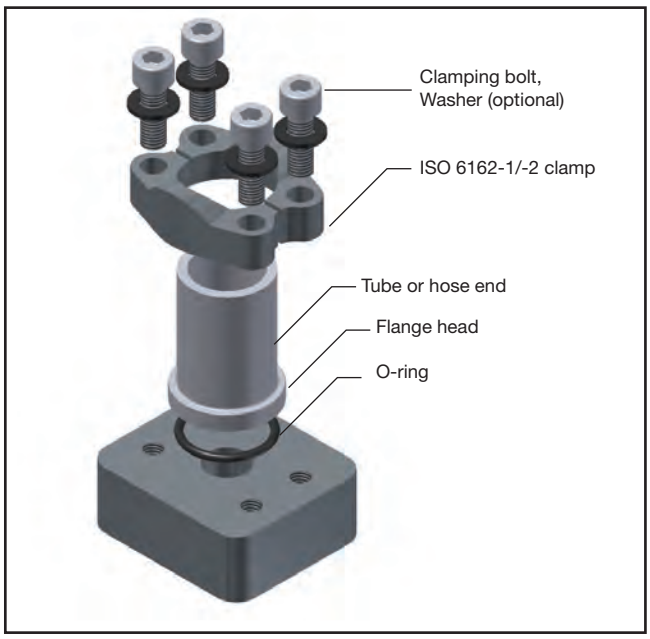

4 bolt flange connection ISO 6162-1/2 (SAE J518 Code 61/62) and ISO 6164 is a proven leak-free connection, especially suited for larger sizes. As a result, it has achieved worldwide acceptance.

The connection's success is in its simplicity. It is a static face seal using a high durometer O-ring (90 shore A) for the seal and clamps and bolts for holding power as shown here.

The (O-ring) seal is compressed between the bottom of the groove in the flange head and the flat surface of the port or flange pad, providing a reliable soft seal. The alternate seal plate has a high durometer bonded rubber seal on the inside edge, which compresses between the two flat surfaces, providing a soft seal with the same reliability. A metal-to-metal contact at the outer face of the flange with the port face keeps the seal from extruding under pressure. This metal-to-metal contact is maintained by the clamping force provided by tightening of the bolts via the clamps.

This simple design provides several advantages over threaded port connections, such as NPT, SAE, BSPP, ISO 6149, etc., in larger sizes:

- Ability to connect up to 5 inch O.D. tube (ISO 6162-1 only)
- Much lower tightening torque required from the four bolts compared to that required for equivalent size threaded port.
- Less tightening torque means smaller wrenches and wrench swing clearances – providing ease of assembly in tight quarters.
- Up to 6000 psi capability through 3“ size (ISO 6162-2 only)
- Use up to 400 bar at the ISO 6164 flange sizes from 3/8"to 4".
- Single seal point between tube/pipe/hose assembly and the port
- Ease of disassembly through use of split clamps

kovaz.cz

Flanges

Assembly of flanges

- SAE flange adapters
- SAE 4 bolt flanges
- Gear pump flanges
- ISO 6164 Square flanges

- Make sure sealing surfaces are free of burrs, nicks, scratches or any contamination
- Lubricate the O-ring with system fluid or compatible lubricant
- Parker recommends to lubricate the bolts on contact surface (head) and lower third of thread (MOLYKOTE G-RAPID PLUS) just before use to avoid any contamination

- Position flange or flange adapter with clamp halves
- Placement of the spring washer on the bolt and connect both to the flange (not for gear pump flanges)

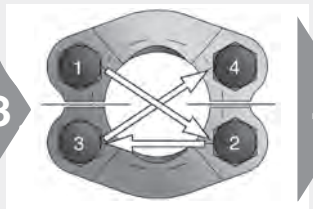

- Hand tighten bolts
- Torque bolts in diagonal sequence in small increments to the appropriate torque level listed in chart

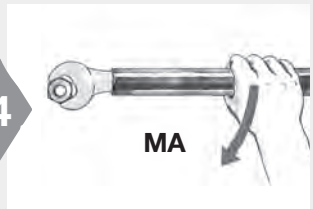

- Tighten bolts according to chart

N

Bolt torques for SAE-Flanges

Recommended torques for metric bolts ISO 4762-10.9 at the specified coefficient of friction μ_{tot} [1)]

for SAE Flange connections according ISO 6162-1 (3000 PSI Serie)

DN **size**	Flange **size**	Metric bolts **(ISO 4762-10.9)**	Torque μ_{tot} = 0.08 **Nm²)**	Torque μ_{tot} = 0.14 **Nm²)**
13	1/2	M8	23	36
19	3/4	M10	44	70
25	1	M10	44	70
32	1 1/4	M10	44	70
38	1 1/2	M12 / M14[3)]	75 / 90	120 / 140
51	2	M12 / M14[3)]	75 / 90	120 / 140
64	2 1/2	M12 / M14[3)]	75 / 90	120 / 140
76	3	M16	155	250
89	3 1/2	M16	155	250
102	4	M16	155	250
127	5	M16	155	250

for SAE Flange connections according ISO 6162-2 (6000 PSI Serie)

DN **size**	Flange **size**	Metric bolts **(ISO 4762-10.9)**	Torque μ_{tot} = 0.08 **Nm²)**	Torque μ_{tot} = 0.14 **Nm²)**
13	1/2	M8	23	36
19	3/4	M10	44	70
25	1	M12	75	120
32	1 1/4	M12 / M14[3)]	75 / 90	120 / 140
38	1 1/2	M16	155	250
51	2	M20	270	440
64	2 1/2	M24	450	700
76	3	M30	875	1420

Recommended torques for inch bolts (UNC thread) ANSI/ASME B18.3 at the specified coefficient of friction μ_{tot} [1)]

for SAE Flange connections according ISO 6162-1 (3000 PSI Serie)

DN **size**	Flange **size**	Inch bolts **(ANSI/ASME B18.3)**	Torque μ_{tot} = 0.17 **Nm²)**
13	1/2	5/16-18	45
19	3/4	3/8-16	80
25	1	3/8-16	80
32	1 1/4	7/16-14	130
38	1 1/2	1/2-13	210
51	2	1/2-13	210
64	2 1/2	1/2-13	210
76	3	5/8-11	300
89	3 1/2	5/8-11	300
102	4	5/8-11	300
127	5	5/8-11	300

for SAE Flange connections according ISO 6162-2 (6000 PSI Serie)

DN **size**	Flange **size**	Inch bolts **(ANSI/ASME B18.3)**	Torque μ_{tot} = 0.17 **Nm²)**
13	1/2	5/16-18	45
19	3/4	3/8-16	80
25	1	7/16-14	130
32	1 1/4	1/2-13	210
38	1 1/2	5/8-11	300
51	2	3/4-10	510

Gear Pump Flange recommend torque

Socket bolt bolt circle **(LK)**	Socket head cap **bolts**	Tightening torques **Nm²)**
LK30	M6	10
LK35	M6	10
LK40	M6	10
LK51	M10	49
LK55	M8	25
LK56	M10	49
LK62	M10	49
LK72.5	M12	85

[1)] The specified friction coefficients are valid for supplied bolts by Parker.
For lubricated bolts (MOLYKOTE G-RAPIDE PLUS) the friction coefficient μ_{tot} = 0.08 has been determined.
For Zinc flaked metric bolts (...ZNFLX) as delivered the friction coefficient μ_{tot} = 0.14 has been determined.
For phosphated bolts we are refering to the ISO 6162.1 and -2 for μ_{tot} = 0.17.
[2)] Torque tolerances max. 10%, min. 0%
[3)] Bolt size M14 is no longer mentioned in the ISO 6162-1 and -2 and should not be used for new constructions.

Technical data

Flange bolts

SAE Flanges according to ISO 6162-1 and -2 (SAE J518)

– metric bolts according to ISO 4762-10.9 (DIN 912-10.9) or higher quality
– UNC bolts according to ANSI/ASME B 18.3

UNC bolts acc. to ISO 6162-1 and -2 should not be used for new designs.

Square flanges according to ISO 6164 (1994)

– metric bolts according to ISO 4762-8.8 (DIN 912-8.8) or ISO 4762-10.9 (DIN 912-10.9)

Gear pump flanges

– metric bolts according to ISO 4762-8.8 (DIN 912-8.8)

Surface protection bolts

– ISO 4762-8.8 - zinc plated A3K (VZX)
– ISO 4762-10.9 - zinc flaked (ZNFLX)

We reserve the right to deliver black phosphated bolts ISO 4762-10.9, for achieving the best lead time if not specifically designated in the order.

Used Sealing

Materials

Flanges according **SAE J518 (ISO 6162-1 and -2), ISO 6164** and all **gear pump flanges** in this catalogue are sealed with an O-ring. The seals of our flanges are out of the following materials:

– NBR (e.g. perbunan) 90 shore A durometer is our standard seal material for hydraulic **steel** flange appplications.
– FKM 85 or 90 shore A durometer is our standard seal material for hydraulic **stainless steel** flange applications.

Perbunan = registered trademark of Bayer

Dimensions

O-ring dimensions of ISO 6164 flanges, and gear pump flanges are shown direct on the product catalogue page. For all flanges according to **ISO 6162-1/2 (SAE J518 Code 61/62)** the O-ring dimension are according to the following table:

Nominal flange size	Nominal-inch tube size (in inches)	ISO 3601-1 SAE J515 O-ring	O-ring size number
13	1/2	18.64×3.53	210
19	3/4	24.99×3.53	214
25	1	32.92×3.53	219
32	1 1/4	37.69×3.53	222
38	1 1/2	47.22×3.53	225
51	2	56.74×3.53	228
64	2 1/2	69.44×3.53	232
76	3	85.32×3.53	237
89	3 1/2	98.02×3.53	241
102	4	110.72×3.53	245
127	5	136.12×3.53	253

Pressure ratings

The maximum recommended working pressure is indicated for each article.
Before using a part, please take notice of the pressure ratings.
All pressure indications are based on a working temperature from –20° celsius up to +100° celsius (resp. ambient temperature from –40° celsius up to +120° celsius). Outside of this temperature range the physical properties of the material is affected and the maximum recommended working pressure is reduced.
The indicated working pressures refer only to the flange itself. For the tubes, fittings and connections the pressure ratings of the specific manufacturer must also be taken into account.

Materials

SAE flanges according to ISO 6162-1 and -2 (SAE 518)

Flange clamps, flange adapter and forged 4 bolt flanges are made of the material ST 52.3 or compatible for **steel** construction. For **stainless steel** constructions we are using for flange clamps, flange adapters and 4 bolt forged flanges the material 1.4401 (316) or compatible. For special applications it is also possible to get the flange adapters made from the material 1.4571 (316Ti).

Square flanges according to ISO 6164 (1994)

Steel construction: ST52.3, C40 or compatible

Stainless steel construction: 1.4571 (316Ti) or compatible

Gear pump flanges

Cast steel construction: GTW40 or compatible

Steel construction: ST52.3, 11SMnPb30 or compatible

Forged steel construction: ST52.3 or compatible

If different materials are used for manufacturing, this will be shown on the catalogue product page.

Surface protection

All surface order possibilities are described on each catalogue page!

Surface possibilities are:

1. Oil dipped, phosphated
2. Cr(VI)-free surface protection CF (type CF, CR3, CFL) with same or better corrosion resistance than yellow zinc chromated surface protection (A3C).

N

Order codes bolts and O-rings

Bolts for flanges

according ISO 6162-1 and -2 (SAE J518)

Nominal flange size			Bolts for flanges and flange halves		Bolts for full flanges	
Series	ISO	SAE	metr. Order code	UNC Order code	metr. Order code	UNC Order code
3000 PSI	13	1/2	**ZYLS8X25109ZNFLX**	**UNC5/16-18X11/4**	**ZYLS8X30109ZNFLX ***	**UNC5/16-18X11/4**
3000 PSI	19	3/4	**ZYLS10X30109ZNFLX**	**UNC3/8-16X11/4**	**ZYLS10X35109ZNFLX ***	**UNC3/8-16X11/2 ***
3000 PSI	25	1	**ZYLS10X30109ZNFLX**	**UNC3/8-16X11/4**	**ZYLS10X35109ZNFLX ***	**UNC3/8-16X11/2 ***
3000 PSI	32	1 1/4	**ZYLS10X30109ZNFLX**	**UNC7/16-14X11/2**	**ZYLS10X40109ZNFLX ***	**UNC7/16-14X11/2**
3000 PSI	32	1 1/4	**ZYLS10X35109ZNFLX ***	–	–	–
3000 PSI	32	1 1/4	**ZYLS12X35109ZNFLX ***	–	–	–
3000 PSI	38	1 1/2	**ZYLS12X35109ZNFLX**	**UNC1/2-13X11/2**	**ZYLS12X45109ZNFLX ***	**UNC1/2-13X13/4 ***
3000 PSI	38	1 1/2	**ZYLS14X35109ZNFLX ***	–	–	–
3000 PSI	51	2	**ZYLS12X35109ZNFLX**	**UNC1/2-13X11/2**	**ZYLS12X45109ZNFLX ***	**UNC1/2-13X13/4 ***
3000 PSI	51	2	**ZYLS14X35109ZNFLX ***	–	–	–
3000 PSI	64	2 1/2	**ZYLS12X40109ZNFLX**	**UNC1/2-13X13/4**	**ZYLS12X45109ZNFLX ***	**UNC1/2-13X13/4 ***
3000 PSI	64	2 1/2	**ZYLS14X35109ZNFLX ***	**UNC1/2-13X11/2 ***	–	–
3000 PSI	76	3	**ZYLS16X50109ZNFLX**	**UNC5/8-11X13/4**	**ZYLS16X55109ZNFLX ***	**UNC5/8-11X21/4 ***
3000 PSI	76	3	**ZYLS16X45109ZNFLX ***	**UNC5/8-11X2 ***	–	–
3000 PSI	89	3 1/2	**ZYLS16X50109ZNFLX**	**UNC5/8-11X2**	**ZYLS16X55109ZNFLX ***	**UNC5/8-11X21/4 ***
3000 PSI	89	3 1/2	**ZYLS16X45109ZNFLX ***	–	–	–
3000 PSI	102	4	**ZYLS16X50109ZNFLX**	**UNC5/8-11X2**	**ZYLS16X55109ZNFLX ***	**UNC5/8-11X21/4 ***
3000 PSI	102	4	**ZYLS16X45109ZNFLX ***	–	–	–
3000 PSI	127	5	**ZYLS16X55109ZNFLX**	**UNC5/8-11X21/4**	**ZYLS16X55109ZNFLX**	**UNC5/8-11X21/4**
3000 PSI	127	5	**ZYLS16X50109ZNFLX ***	**UNC5/8-11X2 ***	–	–
Serie	ISO	SAE	metr.	UNC	metr.	UNC
6000 PSI	13	1/2	**ZYLS8X30109ZNFLX**	**UNC5/16-18X11/4**	**ZYLS8X30109ZNFLX**	**UNC5/16-18X11/4**
6000 PSI	19	3/4	**ZYLS10X35109ZNFLX**	**UNC3/8-16X11/2**	**ZYLS10X35109ZNFLX**	**UNC3/8-16X11/2**
6000 PSI	25	1	**ZYLS12X45109ZNFLX**	**UNC7/16-14X13/4**	**ZYLS12X45109ZNFLX**	**UNC7/16-14X11/2 ***
6000 PSI	25	1	–	**UNC7/16-14X11/2 ***	–	–
6000 PSI	32	1 1/4	**ZYLS14X50109ZNFLX ***	**UNC1/2-13X13/4**	**ZYLS12X50109ZNFLX**	**UNC1/2-13X13/4**
6000 PSI	32	1 1/4	**ZYLS12X45109ZNFLX**	–	**ZYLS14X50109ZNFLX ***	–
6000 PSI	38	1 1/2	**ZYLS16X55109ZNFLX**	**UNC5/8-11X21/4**	**ZYLS16X55109ZNFLX**	**UNC5/8-11X21/4**
6000 PSI	38	1 1/2	–	**UNC5/8-11X2 ***	–	–
6000 PSI	51	2	**ZYLS20X70109ZNFLX**	**UNC3/4-10X23/4**	**ZYLS20X70109ZNFLX**	**UNC3/4-10X23/4**
6000 PSI	51	2	**ZYLS20X65109ZNFLX ***	**UNC3/4-10X21/2 ***	–	–
6000 PSI	64	2 1/2	**ZYLS24X75109ZNFLX ***	–	**ZYLS24X90109ZNFLX ***	–
6000 PSI	76	3	**ZYLS30X90109ZNFLX**	–	**ZYLS30X110109ZNFLX ***	–

* = are not implemented in the ISO 6162 -1 and ISO 6162-2.

Bolts for gear pump flanges

(BFG, BFW)

Typ	Bolts Order code	Description
BFG (10L-28L)	**ZYLS6X22VZX**	4 pieces
BFG (20S)	**ZYLS8X25VZX**	4 pieces

Type		LK	Bolts Order code	Order code	Description
BFW	10L	35	**ZYLS6X22VZX**	**ZYLS6X35VZX**	2 Pieces of each bolt
BFW	12L	35	**ZYLS6X22VZX**	**ZYLS6X35VZX**	2 Pieces of each bolt
BFW	15L	35	**ZYLS6X22VZX**	**ZYLS6X35VZX**	2 Pieces of each bolt
BFW	16S	35	**ZYLS6X22VZX**	**ZYLS6X40VZX**	2 Pieces of each bolt
BFW	20S	35	**ZYLS6X22VZX**	**ZYLS6X45VZX**	2 Pieces of each bolt
BFW	15L	40	**ZYLS6X22VZX**	–	4 Pieces
BFW	18L	40	**ZYLS6X22VZX**	–	4 Pieces
BFW	22L	40	**ZYLS6X22VZX**	–	4 Pieces
BFW	28L	40	**ZYLS6X20VZX**	**ZYLS6X50VZX**	2 Pieces of each bolt
BFW	35L	40	**ZYLS6X22VZX**	**ZYLS6X60VZX**	2 Pieces of each bolt
BFW	20S	40	**ZYLS6X22VZX**	**ZYLS6X45VZX**	2 Pieces of each bolt
BFW	35L	55	**ZYLS8X25VZX**	**ZYLS8X60VZX**	2 Pieces of each bolt
BFW	42L	55	**ZYLS8X25VZX**	**ZYLS8X70VZX**	2 Pieces of each bolt
BFW	20S	55	**ZYLS8X25VZX**	**ZYLS8X50VZX**	2 Pieces of each bolt
BFW	25S	55	**ZYLS8X25VZX**	**ZYLS8X55VZX**	2 Pieces of each bolt
BFW	30S	55	**ZYLS8X25VZX**	**ZYLS8X50VZX**	2 Pieces of each bolt

O-rings for flanges

SAE J518

ISO (DN)	SAE (Inch)	O-ring NBR Order code	O-ring FKM Order code
13	1/2	**OR18.64X3.53X**	**OR18.64X3.53VITX**
19	3/4	**OR25X3.53X**	**OR25X3.53VITX**
25	1	**OR32.92X3.53X**	**OR32.92X3.53VITX**
32	1 1/4	**OR37.69X3.53X**	**OR37.69X3.53VITX**
38	1 1/2	**OR47.22X3.53X**	**OR47.22X3.53VITX**
51	2	**OR56.75X3.53X**	**OR56.75X3.53VITX**
64	2 1/2	**OR69.44X3.53X**	**OR69.44X3.53VITX**
76	3	**OR85.32X3.53X**	**OR85.32X3.53VITX**
89	3 1/2	**OR98.02X3.53X**	**OR98.02X3.53VITX**
102	4	**OR110.72X3.53X**	**OR110.72X3.53VITX**
127	5	**OR136.12X3.53X**	**OR136.12X3.53VITX**

O-rings for hydraulic flanges

(BFG, BFW)

LK	O-ring size	Order code
35	20×2.5	**OR20X2.5X**
40	26×2.5	**OR26X2.5X**
55	32×2.5	**OR32X2.5X**

Features, advantages and benefits

1. **Manufacture** – ISO 6162-1/2 fittings conform to SAE J518 and Code 61/62. This international standards controll dimensions and tolerances of high pressure hydraulic flanges.

2. **Available configurations** – Over 60 different configurations are standard in a range of sizes. The breadth of product provides flexibility in plumbing to insure the best solution possible.

3. **Materials** – All configurations are available as standard in steel, with commonly used styles available in stainless steel.

4. **Available sizes** – Most configurations are available as standard in 1/2″ through 2″ with sizes as large as 5″ available in some styles.

5. **Construction** – Parker offers a completely forged steel product line to insure our products hold up in the most rigorous applications.

6. **Envelope size** – Forged construction provides a compact design compared to flanges machined from block steel.

7. **Pressure ratings** – ISo 6162-1/2 fittings and flanges have pressure ratings up to 6000 psi. The recommended working pressure can be found directly on each catalogue page. This is a quick and easy way to verify the part in question meets the application pressure requirements.

8. **Flange kits** – To reduce ordering and assembly errors, kits that include mounting hardware (bolts, O-ring, and if needed flange halves) are available.

9. **Mounting hardware** – Bolts used in mounting kits are designated at least grade 8.8 to provide long dependable use.

kovaz.cz

How to order

SAE Flange adapters

WFS SAE 90° Elbow flange adapter

SAE Flange / EO 24° cone end
(ISO 6162-1/-2)

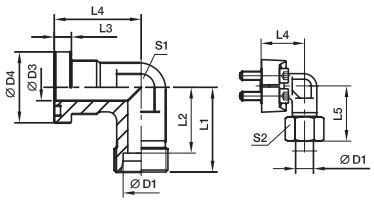

3000 PSI Series

Nom. flange size SAE (in.)	ISO (DN)	D1[2]	D3	D4	L1	L2	L3	L4	L5	S1	S2	Screws (metr.)	Screws (unc.)	Weight (steel) kg/piece	Order code*	PN (bar)[1] CF	PN (bar)[1] 71
1/2	13	12S	12	30.2	50	42.5	6.7	44	58.5	22	24	M 08×25	5/16×1 1/4	0.38	**WFS32/12S**	210	210
1/2	13	15L	12	30.2	36	29.0	6.7	36	44.0	24	27	M 08×25	5/16×1 1/4	0.40	**WFS32/15L**	315	315
1/2	13	16S	12	30.2	38	29.5	6.7	36	48.0	24	30	M 08×25	5/16×1 1/4	0.43	**WFS32/16S**	350	350
1/2	13	18L	12	30.2	50	42.5	6.7	44	59.0	22	32	M 08×25	5/16×1 1/4	0.44	**WFS32/18L**	315	315
3/4	19	16S	19	38.1	64	55.5	6.7	53	73.5	27	30	M 10×30	3/8×1 1/4	0.60	**WFS33/16S**	350	350
3/4	19	18L	19	38.1	39	31.5	6.7	42	48.0	30	32	M 10×30	3/8×1 1/4	0.66	**WFS33/18L**	315	315
3/4	19	22L	19	38.1	41	33.5	6.7	42	50.0	30	36	M 10×30	3/8×1 1/4	0.66	**WFS33/22L**	160	160
3/4	19	20S	17	38.1	43	32.5	6.7	42	54.0	30	36	M 10×30	3/8×1 1/4	0.76	**WFS34/22L**	350	350
3/4	19	25S	17	38.1	45	33.0	6.7	42	57.0	30	46	M 10×30	3/8×1 1/4	0.89	**WFS34/28L**	350	350
1	25	20S	20	44.5	65	54.5	8.0	60	77.0	34	36	M 10×30	3/8×1 1/4	0.7	**WFS34/25S**		350
1	25	22L	18	44.5	65	57.5	8.0	60	74.0	34	36	M 10×30	3/8×1 1/4	0	**WFS34/30S**		160
1	25	28L	25	44.5	44	36.5	8.0	45	53.0	36	41	M 10×30	3/8×1 1/4		**WFS35/35L/10[3]**		160
1	25	25S	20	44.5	48	36.5	8.0	45	57.0	36	46	M 10×30	3/8×1 1/4		**WFS35/25S/10**		0
1	25	30S	24	44.5	50	36.5	8.0	45	63.0	36	50	M 10×30	3/8×1 1/4		**WFS35/30S/10**		0
1 1/4	32	35L	32	50.8	57	46.5	8.0	50	68.0	41	50	M 10×35	3/8×1 1/4				0
1 1/4	32	25S	27	50.8	55	43.0	8.0	60	67.0	41	46	M 10×35	3/8×1 1/4				00
1 1/4	32	30S	28	50.8	57	43.5	8.0	50	70.0	41	50	M 10×35	3/8×1 1/4				200
1 1/4	32	38S	28	50.8	59	43.0	8.0	50	74.0	46	60	M 10×35	3/8×1 1/4	1.			200
1 1/4	32	35L	32	50.8	57	46.5	8.0	50	68.0	41	50	M 12×40	7/16×1 1/2	1.15			160
1 1/4	32	25S	27	50.8	55	43.0	8.0	50	67.0	41	46	M 12×40	7/16×1 1/2	1.35		200	200
1 1/4	32	30S	28	50.8	57	43.5	8.0	50	70.0	41	50	M 12×40	7/16×1 1/2	1.40		200	200
1 1/4	32	38S	28	50.8	59	43.0	8.0	50	74.0	41	60	M 12×40	7/16×1 1/2	1.53	**WFS35/38S**	200	200
1 1/2	38	35L	30	60.3	78	67.5	8.0	66	83.0	50	50	M 12×35	1/2×1 1/2	1.55	**WFS36/35L**	160	160
1 1/2	38	42L	36	60.3	58	47.0	8.0	55	70.0	50	60	M 12×35	1/2×1 1/2	1.60	**WFS36/42L**	160	160
1 1/2	38	38S	36	60.3	64	48.0	8.0	55	79.0	50	60	M 12×35	1/2×1 1/2	1.95	**WFS36/38S**	200	200

[1] Pressure shown = Item deliverable

[2] L = light series; S = heavy series

$\frac{PN\ (bar)}{10}$ = PN (MPa)

Delivery without nut and ring.
Information on ordering complete fittings or alternative sealing materials see page N11.

[3] Order code for the elbow flange adapter assembled with FHS35/10CFX and M10×35 screws.

*Please add the **suffixes** below to the material/surface required

Material	Standard sealing material (no additional suffix needed)	NBR	VIT
Steel, zinc plated, Cr(VI)-free		OMDCFU	
Stainless steel			

Example
only flange adapter
WFS32/16SCFX
WFS32/16S71X

Example
incl. splitflanges,
metr. screws
and O-ring
WFS32/16SOMDCF
WFS32/16SOMD71

The corresponding order variant is contained in the table printed at the bottom of every page in the catalogue.

The right way to order made easy!

Step 1
Selecting order code

1. All flange sizes available in our program of supply are clearly listed in the index at the front of this catalogue.
2. Open the catalogue at the corresponding page containing detailed information of the product of your choice.
3. Select the required flange size!
   The basic order code is printed in bold type on the right-hand side of the table of dimensions.
   Example: **WFS34/30S**

Step 2
Selecting material and surface ...

Now simply add the corresponding ID code for the surface and material variant of the product you require to the basic order code.
This ID code is contained in the table printed at the bottom of every page.

Example: WFS34/30S + **CFX = WFS34/30SCFX**

4. **Ordering single parts**
   Example: single part, Cr(VI)-free galvanized
   WFS34/30S + **CFX = WFS34/30SCFX**
5. **Ordering complete types**
   Example: order incl. splitflanges, metric-bolt pack and O-ring
   WFS34/30S + **OMD**CF **= WFS34/30SOMDCF**
6. **Order containing nut and cutting ring**
   Example: flange incl. splitflanges, metric-bolt pack, O-ring, nut and cutting ring
   WFS34/30S + **CF = WFS34/30SCF**
7. **Order with functional nut**
   Example: flange incl. splitflanges, metric-bolt pack, O-ring, nut and functional nut
   WFS34/30 **(+Z)** S **+ CF = WFS34/30ZSCF**
8. **Other sealing materials**
   Example: flange made of steel incl. splitflanges, metric-bolt pack and O-ring made of **FKM**.
   WFS34/30S + **VIT**OMDCF **= WFS34/30SVITOMDCF**

   Example: flange made of stainless steel incl. splitflanges, metric-bolt pack and O-ring made of **NBR** (for example, Perbunan).
   WFS34/30S + **NBR**OMD71 **= WFS34/30SNBROMD71**

Perbunan = registered trademark of Bayer

SAE Flange clamps

FHS – p. N16

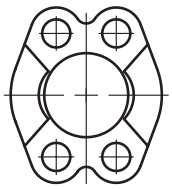

FUS – p. N17

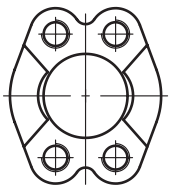

FUSM – p. N18

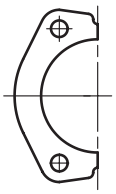

FHSF – p. N19

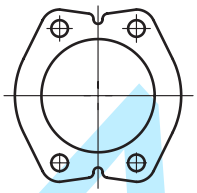

FUSF – p. N20

SAE Flange adapters

EO 24° cone end

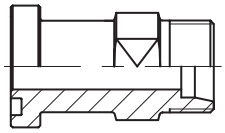

GFS – p. N21

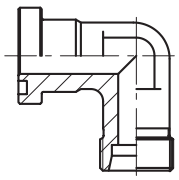

WFS – p. N23

BSPP 60° cone end

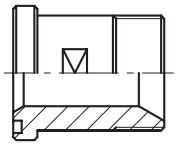

GFS-G – p. N25

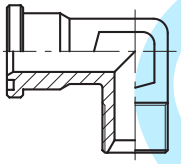

WFS-G – p. N26

Male NPT thread

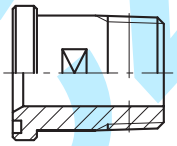

GFS-N – p. N27

O-Lok® ORFS end

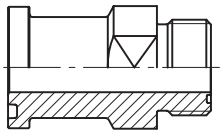

L(O)HQ – p. N28

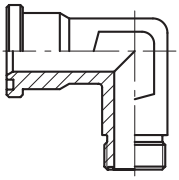

L(O)EMQ – p. N29

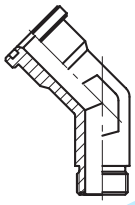

L(O)VQ – p. N30

Triple-Lok® 37° flare end

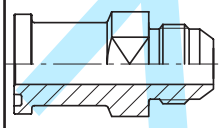

XHQ – p. N31

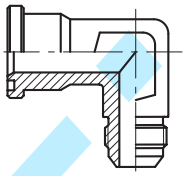

XEMQ – p. N32

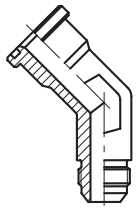

XVQ – p. N33

Butt weld end

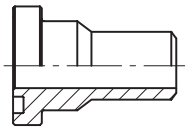

ASR – p. N34

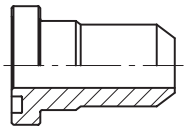

AS – p. N35

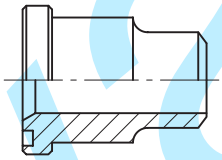

ASL – p. N37

WAS – p. N38

Socket weld end

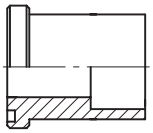

ES – p. N39

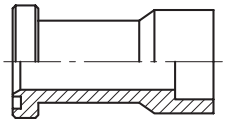

ESL – p. N41

SAE Full flanges

Female BSPP thread

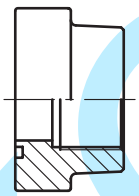

PFF-G – p. N42

PCFF-G – p. N43

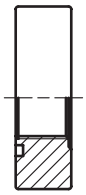

PAFSF-G – p. N44

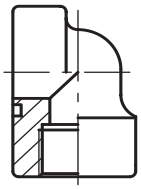

PEFF-G – p. N45

Female NPT thread

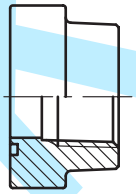

PFF-N – p. N46

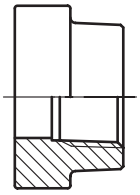

PCFF-N – p. N47

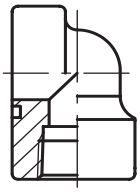

PEFF-N – p. N48

N

SAE Full flanges

EO 24° cone end

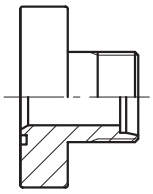

PFF-..S/L – p. N49

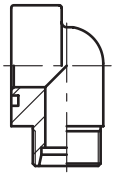

PAFG-90M – p. N50

BSPP 60° cone end

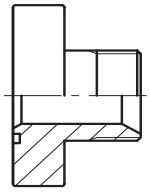

PAFG-G – p. N51

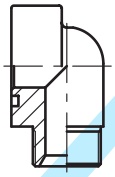

PAFG-90G – p. N52

Triple-Lok® 37° flare end

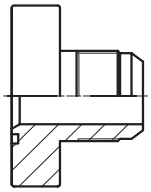

PAFG-X – p. N53

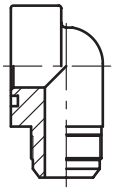

PAFG-90X – p. N54

O-Lok® ORFS end

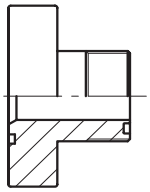

PAFG-L – p. N55

PAFG-90L – p. N56

Butt weld end

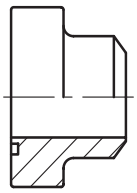

PAFS-B – p. N57

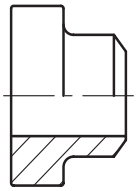

PGFS-B – p. N58

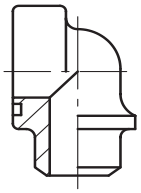

PAFS-90B – p. N59

Socket weld end

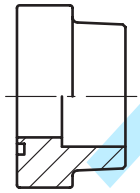

PAFS-S – p. N60

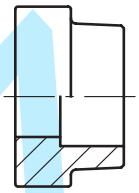

PGFS-S – p. N61

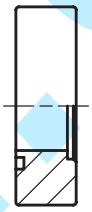

PAFSF-S – p. N62

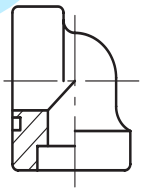

PAFS-90S – p. N63

Complete flange connections

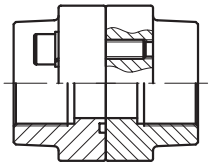

PDFS-G – p. N64

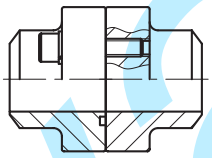

PDFS-B – p. N65

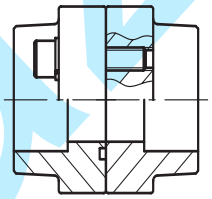

PDFS-S – p. N66

SAE Flange accessories

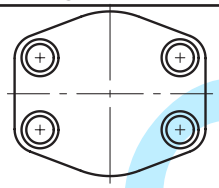

PCFF – p. N67

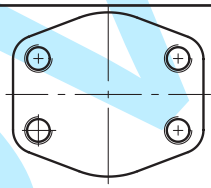

PCCFF – p. N68

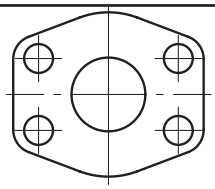

CPM – p. N69

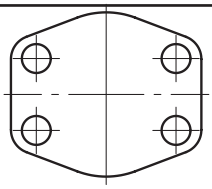

AP – p. N70

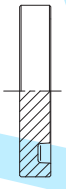

PMQ flat – p. N71

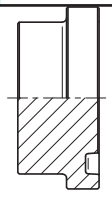

PMQ – p. N72

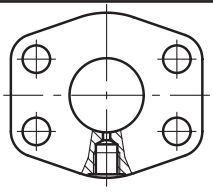

PAGL-(G/M) – p. N73

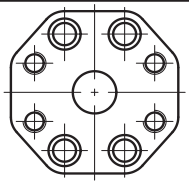

PRF – p. N74

KOVAKOZ

Gear pump flanges

EO 24° cone end

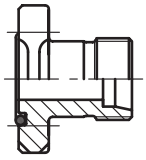

BFG – p. N75

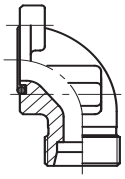

BFW – p. N76

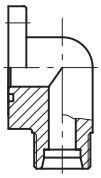

BFW3 – p. N77

O-Lok® ORFS end

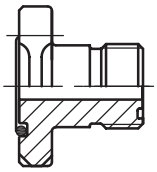

BFGL – p. N78

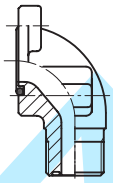

BFWL – p. N79

Male/Female BSPP thread

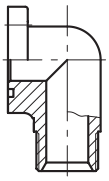

BFW-G – p. N80

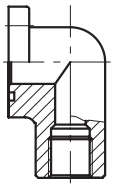

BFW-GI – p. N81

Socket weld end

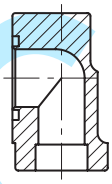

BFW-S – p. N82

Special pump size flanges

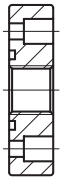

PF – p. N83

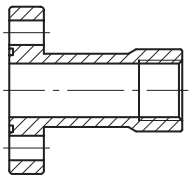

PFL – p. N83

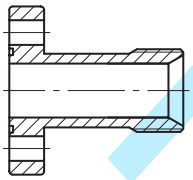

PFE – p. N84

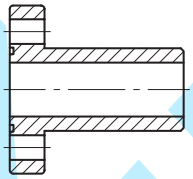

PFB – p. N84

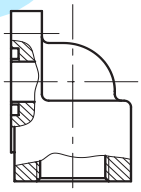

BFW3-G – p. N85

Aluminium flanges

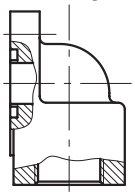

PWDS-G – p. N86

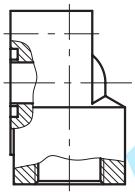

PWDA – p. N87

ISO 6164 Square flanges

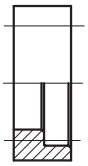

PSFC – p. N88

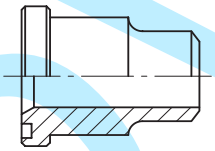

PSFA-B – p. N89

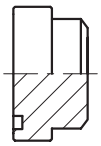

PSFP – p. N90

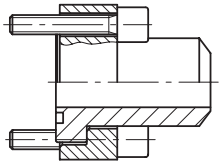

PSF-B – p. N91

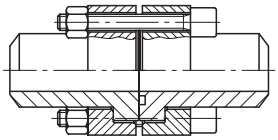

PDSF-B – p. N92

N

kovaz.cz

FHS SAE Split flange halves

ISO 6162-1/-2

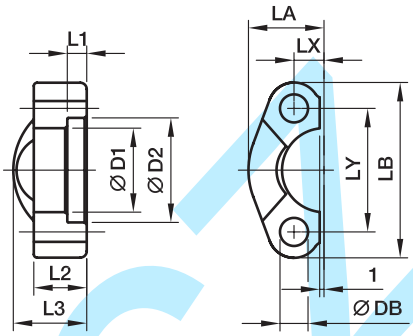

3000 PSI Series

Nom. flange size SAE (in.)	ISO (DN)	D1	D2	L1	L2	L3	LA	LB	LX	LY	DB	Bolts (metr.)	Bolts (unc.)	Weight (steel) kg/piece	Order code*	PN (bar)[1] CF	PN (bar)[1] SS
1/2	13	24.3	31.0	6.2	13	19	23.0	54.0	8.7	38.1	8.9	M 08×25	5/16×1 1/4	0.07	**FHS32**	345	345
3/4	19	32.2	38.9	6.2	14	22	25.9	65.0	11.1	47.6	10.6	M 10×30	3/8×1 1/4	0.09	**FHS33**	345	345
1	25	38.5	45.2	7.5	16	24	29.2	69.9	13.1	52.4	10.6	M 10×30	3/8×1 1/4	0.11	**FHS34**	345	345
1 1/4	32	43.7	51.6	7.5	16	22	36.3	79.4	15.1	58.7	10.6	M 10×35	–	0.17	**FHS35/10**	276	276
1 1/4	32	43.7	51.6	7.5	16	22	36.3	79.4	15.1	58.7	12.0	–	7/16×1 1/2	0.17	**FHS35/12**	276	276
1 1/4	32	43.7	51.6	7.5	16	22	36.3	79.4	15.1	58.7	12.5	M 12×35	–	0.17	**FHS35**	276	276
1 1/2	38	50.8	61.1	7.5	16	25	41.1	93.8	17.9	69.9	13.5	M 12×35	1/2×1 1/2	0.24	**FHS36**	207	207
1 1/2	38	50.8	61.1	7.5	16	25	41.1	93.8	17.9	69.9	14.5	M 14×35	–	0.24	**FHS36/14**	207	207
2	51	62.8	72.3	9.0	16	26	48.2	101.6	21.4	77.8	13.5	M 12×35	1/2×1 1/2	0.27	**FHS38/12**	207	207
2	51	62.8	72.3	9.0	16	26	48.2	101.6	21.4	77.8	14.5	M 14×35	–	0.27	**FHS38**	207	207
2 1/2	64	74.9	84.9	9.0	19	38	54.1	114.3	25.4	88.9	13.5	M 12×40	1/2×1 3/4	0.45	**FHS310**	172	172
2 1/2	64	74.9	84.9	9.0	19	38	54.1	114.3	25.4	88.9	14.5	M 14×40	–	0.45	**FHS310/14**	172	172
3	76	90.9	102.4	9.0	22	41	65.3	135.0	31.0	106.4	16.7	M 16×45	5/8×1 3/4	0.71	**FHS312**	138	138
3 1/2	89	102.4	115.0	10.7	22	28	68.6	152.4	34.9	120.7	16.7	M 16×45	5/8×2	0.65	**FHS314**	34	34
4	102	115.1	127.8	10.7	25	35	74.9	162.0	38.9	130.2	16.7	M 16×50	5/8×2	0.87	**FHS316**	34	34
5	127	140.5	153.2	10.7	28	41	89.4	184.2	46.0	152.4	16.7	M 16×50	5/8×2 1/4	1.25	**FHS320**	34	34

6000 PSI Series

1/2	13	24.6	32.5	7.2	16	22	24.0	56.4	9.1	40.5	9.0	M 08×30	5/16×1 1/4	0.08	**FHS62**	420	420
3/4	19	32.5	42.0	8.3	19	28	30.0	72.0	11.9	50.8	11.0	M 10×35	3/8×1 1/2	0.18	**FHS63**	420	420
1	25	38.8	48.4	9.0	24	33	34.8	81.0	13.9	57.2	13.0	M 12×45	–	0.27	**FHS64**	420	420
1	25	38.9	48.4	9.0	24	33	34.8	81.0	13.9	57.2	12.0	–	7/16×1 3/4	0.27	**FHS64/12**	420	420
1 1/4	32	44.5	54.8	9.8	27	38	38.6	95.3	15.9	66.6	15.0	M 14×50	–	0.27	**FHS65**	420	420
1 1/4	32	44.5	54.8	9.8	27	38	38.6	95.3	15.9	66.6	13.0	M 12×45	1/2×1 3/4	0.27	**FHS65/12**	420	420
1 1/2	38	51.6	64.3	12.1	30	43	47.5	112.8	18.3	79.3	17.0	M 16×55	5/8×2 1/4	0.40	**FHS66**	420	420
2	51	67.6	80.2	12.1	37	52	56.9	133.4	22.2	96.8	22.0	M 20×65	3/4×2 3/4	0.40	**FHS68**	420	420
2 1/2	64	90.0	108.0	20.0	45	45	75.1	180.0	29.4	123.8	25.0	M 24×75	–	0.68	**FHS610**	420	420
3	76	115.0	132.5	25.0	55	55	99.1	215.0	35.7	152.4	31.5	M 30×90	–	1.05	**FHS612**	420	420

[1]) Pressure shown = Item deliverable

$\frac{\text{PN (bar)}}{10}$ = PN (MPa)

*Please add the **suffixes** below according to the material/surface required.

Order code suffixes			
Material	Suffix surface and material	Example	Description
Steel, zinc plated, Cr(VI)-free	CF	FHS32CFX	only flange half
Stainless steel	SS	FHS32SSX	only flange half

FUS SAE Full flanges

ISO 6162-1/-2

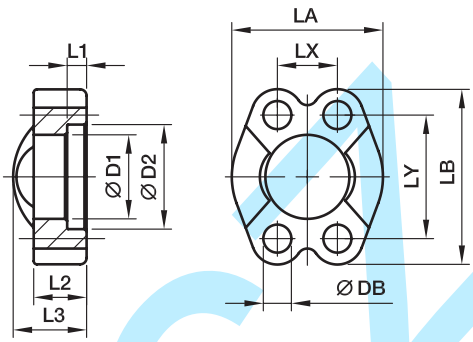

3000 PSI Series

Nom. flange size SAE (in.)	ISO (DN)	D1	D2	L1	L2	L3	LA	LB	LX	LY	DB	Bolts (metr.)	Bolts (unc.)	Weight (steel) kg/piece	Order code*	PN (bar)[1] CF	PN (bar)[1] SS
1/2	13	24.3	31.0	6.2	13	19	46	54.0	17.5	38.1	8.9	M 08×25	5/16×1 1/4	0.13	**FUS32**	345	345
3/4	19	32.2	38.9	6.2	14	22	52	65.0	22.3	47.6	10.6	M 10×30	3/8×1 1/4	0.18	**FUS33**	345	345
1	25	38.5	45.2	7.5	16	24	59	69.9	26.2	52.4	10.6	M 10×30	3/8×1 1/4	0.22	**FUS34**	345	345
1 1/4	32	43.7	51.6	7.5	16	22	73	79.4	30.2	58.7	10.6	M 10×35	–	0.30	**FUS35/10**	276	276
1 1/4	32	43.7	51.6	7.5	16	22	73	79.4	30.2	58.7	12.0	–	7/16×1 1/2	0.29	**FUS35/12**	276	276
1 1/4	32	43.7	51.6	7.5	16	22	73	79.4	30.2	58.7	12.5	M 12×35	–	0.29	**FUS35**	276	276
1 1/2	38	50.8	61.1	7.5	16	25	83	93.8	35.8	69.9	13.5	M 12×35	1/2×1 1/2	0.45	**FUS36**	207	207
1 1/2	38	50.8	61.1	7.5	16	25	83	93.8	35.8	69.9	14.5	M 14×35	–	0.44	**FUS36/14**	207	207
2	51	62.8	72.3	9.0	16	26	97	101.6	42.8	77.8	13.5	M 12×35	1/2×1 1/2	0.53	**FUS38/12**	207	207
2	51	62.8	72.3	9.0	16	26	97	101.6	42.8	77.8	14.5	M 14×35	–	0.51	**FUS38**	207	207
2 1/2	64	74.9	84.9	9.0	19	38	109	114.3	50.8	88.9	13.5	M 12×40	1/2×1 3/4	0.85	**FUS310**	172	172
2 1/2	64	74.9	84.9	9.0	19	38	109	114.3	50.8	88.9	14.5	M 14×40	–	0.82	**FUS310/14**	172	172
3	76	90.9	102.4	9.0	22	41	131	135.0	61.9	106.4	16.7	M 16×45	5/8×1 3/4	1.30	**FUS312**	138	138
3 1/2	89	102.4	115.0	10.7	22	28	140	152.4	69.9	120.7	16.7	M 16×45	5/8×2	1.57	**FUS314**	34	34
4	102	115.1	127.8	10.7	25	35	150	162.0	77.8	130.2	16.7	M 16×50	5/8×2	1.82	**FUS316**	34	34
5	127	140.5	153.2	10.7	28	41	180	184.2	92.1	152.4	16.7	M 16×50	5/8×2 1/4	2.63	**FUS320**	34	34

6000 PSI Series

1/2	13	24.6	32.5	7.2	16	22	48	56.4	18.2	40.5	8.9	M 08×30	5/16×1 1/4	0.16	**FUS62**	420	420
3/4	19	32.5	42.0	8.3	19	28	60	71.4	23.8	50.8	10.6	M 10×35	3/8×1 1/2	0.31	**FUS63**	420	420
1	25	38.8	48.4	9.0	24	33	70	81.0	27.8	57.2	13.3	M 12×45	–	0.49	**FUS64**	420	420
1	25	38.9	48.4	9.0	24	33	70	81.0	27.8	57.2	12.0	–	7/16×1 3/4	0.51	**FUS64/12**	420	420
1 1/4	32	44.5	54.8	9.8	27	38	78	95.3	31.8	66.6	15.0	M 14×50	–	0.77	**FUS65**	420	420
1 1/4	32	44.5	54.8	9.8	27	38	78	95.3	31.8	66.6	13.3	M 12×45	1/2×1 3/4	0.81	**FUS65/12**	420	420
1 1/2	38	51.6	64.3	12.1	30	43	96	112.8	36.5	79.3	16.7	M 16×55	5/8×2 1/4	1.31	**FUS66**	420	420
2	51	67.6	80.2	12.1	37	52	114	133.4	44.5	96.8	20.6	M 20×65	3/4×2 3/4	2.00	**FUS68**	420	420
2 1/2	64	90.0	108.9	20.5	45	45	150	180.0	58.7	123.8	25.0	M 24×75	–	3.95	**FUS610**	420	420
3	76	115.0	132.5	25.5	55	55	178	215.0	71.4	152.4	31.0	M 30×90	–	6.73	**FUS612**	420	420

[1]) Pressure shown = Item deliverable

$\frac{\text{PN (bar)}}{10} = \text{PN (MPa)}$

*Please add the **suffixes** below according to the material/surface required.

Order code suffixes			
Material	Suffix surface and material	Example	Description
Steel, zinc plated, Cr(VI)-free	CF	FUS32CFX	only flange clamp
Stainless steel	SS	FUS32SSX	only flange clamp

N

FUSM SAE Full flanges with metric tapped holes

ISO 6162-1/-2

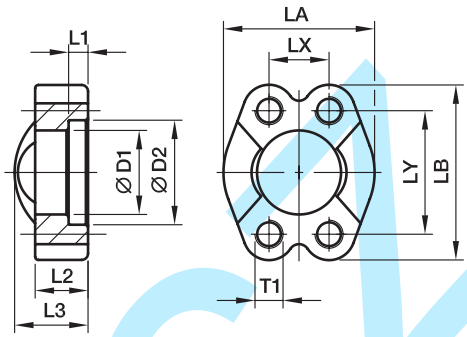

3000 PSI Series

Nom. flange size SAE (in.)	ISO (DN)	D1	D2	L1	L2	L3	LA	LB	LX	LY	T1	Weight (steel) kg/piece	Order code*	PN (bar)[1] CF	SS
1/2	13	24.3	31.0	6.2	13	20	46	54.0	17.5	38.1	**M 8**	0.13	**FUSM32**	345	345
3/4	19	32.1	38.9	6.2	14	22	52	65.0	22.3	47.6	**M10**	0.19	**FUSM33**	345	345
1	25	38.5	45.2	7.5	16	24	59	69.9	26.2	52.4	**M10**	0.23	**FUSM34**	345	345
1 1/4	32	43.7	51.6	7.5	16	22	73	79.4	30.2	58.7	**M10**	0.31	**FUSM35/10**	276	276
1 1/4	32	43.7	51.6	7.5	16	22	73	79.4	30.2	58.7	**M12**	0.30	**FUSM35/12**	276	276
1 1/2	38	50.8	61.1	7.5	16	25	83	93.8	35.7	69.9	**M12**	0.44	**FUSM36**	207	207
1 1/2	38	50.8	61.1	7.5	16	25	83	93.8	35.7	69.9	**M14**	0.47	**FUSM36/14**	207	207
2	51	62.8	72.3	9.0	16	26	97	101.6	42.9	77.8	**M12**	0.56	**FUSM38/12**	207	207
2	51	62.8	72.3	9.0	16	26	97	101.6	42.9	77.8	**M14**	0.54	**FUSM38**	207	207
2 1/2	64	74.9	84.9	9.0	19	38	109	114.3	50.8	88.9	**M12**	0.85	**FUSM310**	172	172
2 1/2	64	74.9	84.9	9.0	19	38	109	114.3	50.8	88.9	**M14**	0.73	**FUSM310/14**	172	172
3	76	90.9	102.4	9.0	22	41	131	135.0	61.9	106.4	**M16**	1.25	**FUSM312**	138	138
3 1/2	89	102.4	115.0	10.7	23	28	140	152.4	69.9	120.7	**M16**	1.66	**FUSM314**	34	34
4	102	115.1	127.8	10.7	25	35	150	162.0	77.8	130.2	**M16**	1.83	**FUSM316**	34	34
5	127	140.5	153.2	10.7	28	41	180	184.2	92.1	152.4	**M16**	2.50	**FUSM320**	34	34

6000 PSI Series

1/2	13	24.6	32.5	7.2	16	22	48	56.4	18.2	40.5	**M 8**	0.18	**FUSM62**	420	420
3/4	19	32.5	42.0	8.2	19	28	60	71.4	23.8	50.8	**M10**	0.34	**FUSM63**	420	420
1	25	38.9	48.4	9.0	24	33	70	81.0	27.8	57.2	**M12**	0.55	**FUSM64**	420	420
1 1/4	32	44.5	54.8	9.8	27	38	78	95.3	31.8	66.6	**M14**	0.87	**FUSM65**	420	420
1 1/4	32	44.5	54.8	9.8	27	38	78	95.3	31.8	66.6	**M12**	0.87	**FUSM65/12**	420	420
1 1/2	38	51.6	64.3	12.1	30	43	96	112.8	36.5	79.3	**M16**	1.33	**FUSM66**	420	420
2	51	67.6	80.2	12.1	37	52	114	133.4	44.5	96.8	**M20**	2.31	**FUSM68**	420	420
2 1/2	64	90.0	108.9	20.5	45	45	150	180.0	58.7	123.8	**M24**	4.02	**FUSM610**	420	420
3	76	115.0	132.5	25.5	55	55	178	215.0	71.4	152.4	**M30**	7.05	**FUSM612**	420	420

[1]) Pressure shown = Item deliverable

$\frac{\text{PN (bar)}}{10}$ = PN (MPa)

*Please add the **suffixes** below according to the material/surface required.

Order code suffixes			
Material	Suffix surface and material	Example only flange clamp with metr. threads	Description
Steel, zinc plated, Cr(VI)-free	CF	FUSM32CFM	only flange clamp
Stainless steel	SS	FUSM32SSM	only flange clamp

FHSF SAE Flange halves flat

ISO 6162-1/-2

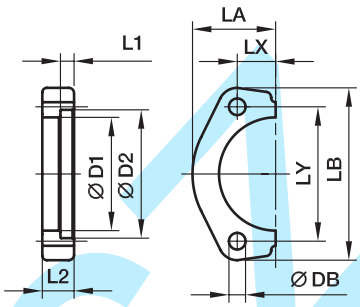

3000 PSI Series

Nom. flange size SAE (in.)	ISO (DN)	D1	D2	L1	L2	LA	LB	LX	LY	DB	Bolts (metr.)	Bolts (unc.)	Weight (steel) kg/piece	Order code*	PN (bar)[1] CF
1/2	13	24.3	31.0	6.2	13	22.8	56	8.7	38.1	8.9	M 08×25	5/16×1 1/4	0.06	**FHSF32**	345
3/4	19	32.1	38.9	6.2	14	25.9	65	11.1	47.6	10.6	M 10×30	3/8×1 1/4	0.07	**FHSF33**	345
1	25	38.5	45.3	7.5	16	29.2	70	13.1	52.4	10.6	M 10×30	3/8×1 1/4	0.10	**FHSF34**	345
1 1/4	32	43.7	51.6	7.5	16	36.6	79	15.1	58.7	10.6	M 10×35	–	0.16	**FHSF35/10**	276
1 1/4	32	43.7	51.6	7.5	16	36.6	79	15.1	58.7	12.5	M 12×35	7/16×1 1/2	0.16	**FHSF35/12**	276
1 1/2	38	50.8	61.1	7.5	16	41.1	94	17.9	69.9	13.5	M 12×35	1/2×1 1/2	0.21	**FHSF36**	207
1 1/2	38	50.8	61.1	7.5	16	41.1	94	17.9	69.9	14.5	M 14×35	–	0.20	**FHSF36/14**	207
2	51	62.8	72.3	9.0	16	48.2	104	21.4	77.8	13.5	M 12×35	1/2×1 1/2	0.26	**FHSF38**	207
2	51	62.8	72.3	9.0	16	48.2	104	21.4	77.8	14.5	M 14×35	–	0.25	**FHSF38/14**	207
2 1/2	64	74.9	84.9	9.0	19	53.0	114	25.4	88.9	13.5	M 12×40	1/2×1 3/4	0.38	**FHSF310**	172
2 1/2	64	74.9	84.9	9.0	19	53.0	114	25.4	88.9	14.5	M 14×40	–	0.36	**FHSF310/14**	172
3	76	90.9	102.4	9.0	22	64.3	135	31.0	106.4	16.7	M 16×45	5/8×1 3/4	0.57	**FHSF312**	138

6000 PSI Series

1/2	13	24.6	32.5	7.2	16	23.6	56	9.1	40.5	8.9	M 08×30	5/16×1 1/4	0.08	**FHSF62**	420
3/4	19	32.5	42.0	8.3	20	30.0	71	11.9	50.8	10.6	M 10×35	3/8×1 1/2	0.14	**FHSF63**	420
1	25	38.8	48.4	9.0	25	34.8	81	13.9	57.2	13.3	M 12×45	–	0.23	**FHSF64**	420
1	25	38.8	48.4	9.0	25	34.8	81	13.9	57.2	12.0	M 12×45	7/16×1 3/4	0.23	**FHSF64/12**	420
1 1/4	32	44.5	54.8	9.8	27	38.6	95	15.9	66.6	15.0	M 14×50	–	0.34	**FHSF65**	420
1 1/4	32	44.5	54.8	9.8	27	38.6	95	15.9	66.6	13.3	M 12×50	1/2×1 3/4	0.34	**FHSF65/12**	420
1 1/2	38	51.6	64.3	12.1	30	47.5	113	18.3	79.3	16.7	M 16×55	5/8×2 1/4	0.59	**FHSF66**	420
2	51	67.6	80.2	12.1	37	56.9	133	22.2	96.8	20.6	M 20×65	3/4×2 3/4	0.93	**FHSF68**	420

[1]) Pressure shown = Item deliverable

$\frac{\text{PN (bar)}}{10}$ = PN (MPa)

Material for steel: C60

*Please add the **suffixes** below according to the material/surface required.

Order code suffixes			
Material	Suffix surface and material	Example	Description
Steel, zinc plated, Cr(VI)-free	CF	FHSF32CF	only flange half

FUSF SAE Full flanges flat

ISO 6162-1/-2

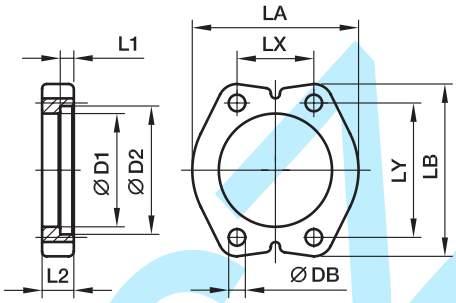

3000 PSI Series

Nom. flange size SAE (in.)	ISO (DN)	D1	D2	L1	L2	LA	LB	LX	LY	DB	Bolts (metr.)	Bolts (unc.)	Weight (steel) kg/piece	Order code*	PN (bar)[1] CF
1/2	13	24.3	31.0	6.2	13	46	56	17.4	38.1	8.9	M 08×25	5/16×1 1/4	0.12	**FUSF32**	345
3/4	19	32.1	38.9	6.2	14	52	65	22.2	47.6	10.6	M 10×30	3/8×1 1/4	0.18	**FUSF33**	345
1	25	38.5	45.3	7.5	16	59	70	26.2	52.4	10.6	M 10×30	3/8×1 1/4	0.23	**FUSF34**	345
1 1/4	32	43.7	51.6	7.5	16	73	79	30.2	58.7	10.6	M 10×35	–	0.33	**FUSF35/10**	276
1 1/4	32	43.7	51.6	7.5	16	73	79	30.2	58.7	12.5	M 12×35	7/16×1 1/2	0.32	**FUSF35/12**	276
1 1/2	38	50.8	61.1	7.5	16	83	94	35.8	69.9	13.5	M 12×35	1/2×1 1/2	0.42	**FUSF36**	207
1 1/2	38	50.8	61.1	7.5	16	83	94	35.8	69.9	14.5	M 14×35	–	0.41	**FUSF36/14**	207
2	51	62.8	72.3	9.0	16	97	104	42.8	77.8	13.5	M 12×35	1/2×1 1/2	0.56	**FUSF38/12**	207
2	51	62.8	72.3	9.0	16	97	104	42.8	77.8	14.5	M 14×35	–	0.51	**FUSF38**	207
2 1/2	64	74.9	84.9	9.0	19	109	114	50.8	88.9	13.5	M 12×40	1/2×1 3/4	0.77	**FUSF310**	172
2 1/2	64	74.9	84.9	9.0	19	109	114	50.8	88.9	14.5	M 14×40	–	0.72	**FUSF310/14**	172
3	76	90.9	102.4	9.0	22	131	135	61.9	106.4	16.7	M 16×45	5/8×1 3/4	1.13	**FUSF312**	138

6000 PSI Series

1/2	13	24.6	32.5	7.2	16	48	56	18.2	40.5	8.9	M 08×30	5/16×1 1/4	0.17	**FUSF62**	420
3/4	19	32.5	42.0	8.3	20	60	71	23.8	50.8	10.6	M 10×35	3/8×1 1/2	0.32	**FUSF63**	420
1	25	38.8	48.4	9.0	25	70	81	27.8	57.2	13.3	M 12×45	–	0.56	**FUSF64**	420
1	25	38.8	48.4	9.0	25	70	81	27.8	57.2	12.0	M 12×45	7/16×1 3/4	0,56	**FUSF64/12**	420
1 1/4	32	44.5	54.8	9.8	27	78	95	31.8	66.6	15.0	M 14×50	–	0.76	**FUSF65**	420
1 1/4	32	44.5	54.8	9.8	27	78	95	31.8	66.6	13.3	M 12×50	1/2×1 3/4	0.76	**FUSF65/12**	420
1 1/2	38	51.6	64.3	12.1	30	95	113	36.5	79.3	16.7	M 16×55	5/8×2 1/4	1.30	**FUSF66**	420
2	51	67.6	80.2	12.1	37	114	133	44.5	96.8	20.6	M 20×65	3/4×2 3/4	1.88	**FUSF68**	420

[1] Pressure shown = Item deliverable

$\frac{\text{PN (bar)}}{10}$ = PN (MPa)

Material for steel: C60

*Please add the **suffixes** below according to the material/surface required.

Order code suffixes			
Material	Suffix surface and material	Example	Description
Steel, zinc plated, Cr(VI)-free	CF	FUSF32CF	only flange clamp

GFS SAE Straight flange adapter

SAE Flange / EO 24° cone end
(ISO 6162-1/-2)

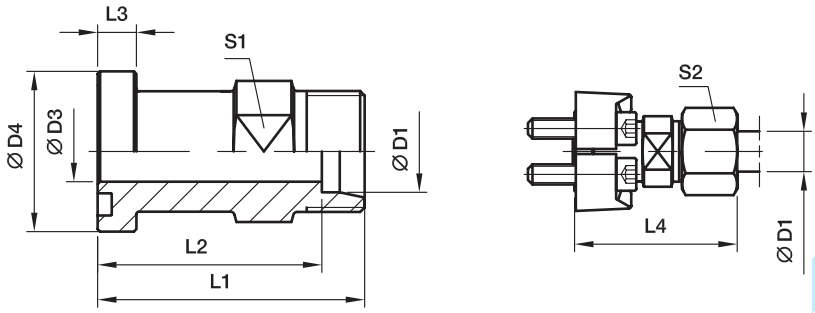

3000 PSI Series

Nom. flange size SAE (in.)	Nom. flange size ISO (DN)	D1[2]	D3	D4	L1	L2	L3	L4	S1	S2	Bolts (metr.)	Bolts (unc.)	Weight (steel) kg/piece	Order code*	PN (bar)[1] CF	PN (bar)[1] 71
1/2	13	15L	12.0	30.2	48.0	41.0	6.7	56.0	24	27	M 08×25	5/16×1 1/4	0.13	**GFS32/15L**	315	315
1/2	13	16S	12.0	30.2	50.0	41.5	6.7	60.0	24	30	M 08×25	5/16×1 1/4	0.14	**GFS32/16S**	350	350
1/2	13	18L	14.0	30.2	50.0	42.5	6.7	61.0	19	32	M 08×25	5/16×1 1/4	0.12	**GFS32/18L**	315	315
3/4	19	16S	12.0	38.1	55.0	46.5	6.7	64.5	27	30	M 10×30	3/8×1 1/4	0.22	**GFS33/16S**	350	350
3/4	19	18L	17.0	38.1	53.0	45.5	6.7	62.0	30	32	M 10×30	3/8×1 1/4	0.22	**GFS33/18L**	315	315
3/4	19	22L	19.0	38.1	53.0	45.5	6.7	62.0	30	36	M 10×30	3/8×1 1/4	0.20	**GFS33/22L**	160	160
3/4	19	28L	19.0	38.1	55.0	41.0	6.7	64.0	32	41	M 10×30	3/8×1 1/4	0.23	**GFS33/28L**	160	160
3/4	19	20S	17.0	38.1	57.0	46.5	6.7	68.0	30	36	M 10×30	3/8×1 1/4	0.25	**GFS33/20S**	350	350
3/4	19	25S	17.0	38.1	57.0	45.0	6.7	69.0	30	46	M 10×30	3/8×1 1/4	0.27	**GFS33/25S**	350	350
1	25	20S	25.0	44.5	60.0	48.5	8.0	71.0	32	36	M 10×30	3/8×1 1/4	0.34	**GFS34/20S**	350	350
1	25	28L	24.0	44.5	54.0	46.5	8.0	63.0	36	41	M 10×30	3/8×1 1/4	0.28	**GFS34/28L**	160	160
1	25	25S	20.0	44.5	58.0	46.5	8.0	60.0	36	46	M 10×30	3/8×1 1/4	0.35	**GFS34/25S**	350	350
1	25	30S	24.0	44.5	63.0	49.5	8.0	76.0	36	50	M 10×30	3/8×1 1/4	0.36	**GFS34/30S**	250	250
1	25	42L	24.0	44.5	76.0	65.0	8.0	87.5	41	60	M 10×30	3/8×1 1/4	0.49	**GFS34/42L**	160	160
1 1/4	32	35L	32.0	50.8	58.0	47.5	8.0	69.0	41	50	M 10×35	–	0.36	**GFS35/35L/10[3]**	160	160
1 1/4	32	25S	27.0	50.8	60.0	48.0	8.0	72.0	41	46	M 10×35	–	0.44	**GFS35/25S/10[3]**	200	200
1 1/4	32	30S	28.5	50.8	62.0	48.5	8.0	75.0	41	50	M 10×35	–	0.44	**GFS35/30S/10[3]**	200	200
1 1/4	32	38S	28.0	50.8	66.0	50.0	8.0	81.0	46	60	M 10×35	–	0.46	**GFS35/38S/10[3]**	200	200
1 1/4	32	28L	23.0	50.8	60.0	52.5	8.0	67.0	36	41	M 12×40	7/16×1 1/2	0.41	**GFS35/28L**	160	160
1 1/4	32	35L	32.0	50.8	58.0	47.5	8.0	69.0	41	50	M 12×40	7/16×1 1/2	0.36	**GFS35/35L**	160	160
1 1/4	32	25S	27.0	50.8	60.0	48.0	8.0	72.0	41	46	M 12×40	7/16×1 1/2	0.44	**GFS35/25S**	200	200
1 1/4	32	30S	28.5	50.8	62.0	48.5	8.0	75.0	41	50	M 12×40	7/16×1 1/2	0.44	**GFS35/30S**	200	200
1 1/4	32	38S	28.0	50.8	66.0	50.0	8.0	81.0	46	60	M 12×40	7/16×1 1/2	0.46	**GFS35/38S**	200	200
1 1/2	38	35L	30.0	60.3	65.0	54.5	8.0	76.0	46	50	M 12×35	1/2×1 1/2	0.55	**GFS36/35L**	160	160
1 1/2	38	42L	36.0	60.3	64.0	53.0	8.0	76.0	46	60	M 12×35	1/2×1 1/2	0.49	**GFS36/42L**	160	160
1 1/2	38	38S	32.0	60.3	70.0	54.0	8.0	85.0	46	60	M 12×35	1/2×1 1/2	0.64	**GFS36/38S**	200	200

[1] Pressure shown = Item deliverable

[2] L = light series; S = heavy series

$\frac{\text{PN (bar)}}{10}$ = PN (MPa)

Delivery without nut and ring.
Information on ordering complete fittings or alternative sealing materials see page N12.

[3] Order code for the flange adapter assembled with FHS35/10CFX and M10×35 bolts.

See pages N16 and N19 for related flange halves depending on bolt sets.

Stainless steel parts may have dimensional deviations. Additional information on request.

*Please add the **suffixes** below according to the material/surface required.

Order code suffixes					
Material	Suffix surface and material	Example only flange adapter	Example incl. splitflanges, metr. bolts and O-ring	Example incl. splitflanges, UNC bolts and O-ring	Standard sealing material (no additional suffix needed)
Steel, zinc plated, Cr(VI)-free	CF	GFS32/16SCFX	GFS32/16SOMDCF	GFS32/16SOMDCFU	NBR
Stainless steel	71	GFS32/16S71X	GFS32/16SOMD71	–	VIT

N

GFS SAE Straight flange adapter

SAE Flange / EO 24° cone end
(ISO 6162-1/-2)

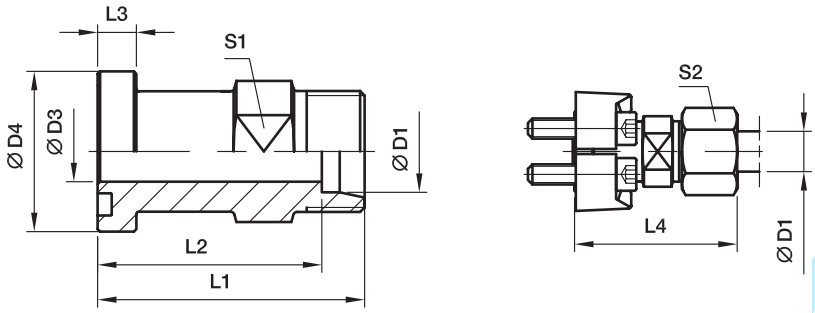

6000 PSI Series

Nom. flange size SAE (in.)	Nom. flange size ISO (DN)	D1[2]	D3	D4	L1	L2	L3	L4	S1	S2	Bolts (metr.)	Bolts (unc.)	Weight (steel) kg/piece	Order code*	PN (bar)[1] CF	PN (bar)[1] 71
1/2	13	12S	8	31.8	50.0	42.5	7.7	57.5	19	24	M 08×30	5/16×1 1/4	0.14	**GFS62/12S**	420	420
1/2	13	14S	10	31.8	50.0	42.0	7.7	59.5	19	27	M 08×30	5/16×1 1/4	0.17	**GFS62/14S**	420	420
1/2	13	16S	12	31.8	50.0	41.5	7.7	49.5	19	30	M 08×30	5/16×1 1/4	0.15	**GFS62/16S**	420	420
3/4	19	16S	17	41.3	59.0	50.5	8.7	68.5	30	30	M 10×35	3/8×1 1/2	0.28	**GFS63/16S**	420	420
3/4	19	20S	17	41.3	61.0	50.5	8.7	72.0	30	36	M 10×35	3/8×1 1/2	0.27	**GFS63/20S**	420	400
3/4	19	25S	17	41.3	63.0	51.0	8.7	75.0	30	46	M 10×35	3/8×1 1/2	0.31	**GFS63/25S**	420	400
3/4	19	30S	18	41.3	76.0	62.0	8.7	89.0	30	50	M 10×35	3/8×1 1/2	0.42	**GFS63/30S**	420	400
3/4	19	38S	19	41.3	80.0	64.0	8.7	94.5	41	60	M 10×35	3/8×1 1/2	0.57	**GFS63/38S**	420	315
1	25	20S	16	47.6	75.0	64.5	9.5	88.0	36	36	M 12×45	7/16×1 3/4	0.49	**GFS64/20S**	420	400
1	25	25S	20	47.6	72.0	60.0	9.5	84.0	36	46	M 12×45	7/16×1 3/4	0.46	**GFS64/25S**	420	400
1	25	30S	24	47.6	74.0	62.0	9.5	87.0	36	50	M 12×45	7/16×1 3/4	0.43	**GFS64/30S**	420	400
1	25	38S	25	47.6	90.0	74.0	9.5	105.0	41	60	M 12×45	7/16×1 3/4	0.65	**GFS64/38S**	420	315
1 1/4	32	25S	20	54.0	80.0	68.0	10.2	92.0	41	46	M 14×50	–	0.68	**GFS65/25S**	420	400
1 1/4	32	25S	20	54.0	80.0	68.0	10.2	92.0	41	46	M 12×50	1/2X1 3/4	0.68	**GFS65/25S/12[3])**	420	400
1 1/4	32	30S	30	54.0	79.0	65.5	10.2	92.0	41	50	M 12×50	1/2×1 3/4	0.58	**GFS65/30S/12[3])**	420	400
1 1/4	32	38S	31	54.0	80.0	64.0	10.2	94.5	46	60	M 12×50	1/2×1 3/4	0.58	**GFS65/38S/12[3])**	420	315
1 1/4	32	30S	30	54.0	79.0	65.5	10.2	92.0	41	50	M 14×50	–	0.58	**GFS65/30S**	420	400
1 1/4	32	38S	31	54.0	80.0	64.0	10.2	94.5	46	60	M 14×50	–	0.58	**GFS65/38S**	420	315
1 1/2	38	30S	30	63.5	90.0	74.0	12.5	103.0	46	50	M 16×55	5/8×2 1/4	1.00	**GFS66/30S**	420	400
1 1/2	38	38S	32	63.5	90.0	74.0	12.5	104.5	46	60	M 16×55	5/8×2 1/4	0.93	**GFS66/38S**	420	315

[1]) Pressure shown = Item deliverable

[2]) S = heavy series

$\frac{\text{PN (bar)}}{10}$ = PN (MPa)

Delivery without nut and ring.
Information on ordering complete fittings or alternative sealing materials see page N12.

[3]) Order code for the flange adapter assembled with FHS65/12CFX and M12×50 bolts.

See pages N16 and N19 for related flange halves depending on bolt sets.

Stainless steel parts may have dimensional deviations. Additional information on request.

*Please add the **suffixes** below according to the material/surface required.

Order code suffixes					
Material	Suffix surface and material	Example only flange adapter	Example incl. splitflanges, metr. bolts and O-ring	Example incl. splitflanges, UNC bolts and O-ring	Standard sealing material (no additional suffix needed)
Steel, zinc plated, Cr(VI)-free	CF	GFS62/16SCFX	GFS62/16SOMDCF	GFS62/16SOMDCFU	NBR
Stainless steel	71	GFS62/16S71X	GFS62/16SOMD71	–	VIT

WFS SAE 90° Elbow flange adapter

SAE Flange / EO 24° cone end
(ISO 6162-1/-2)

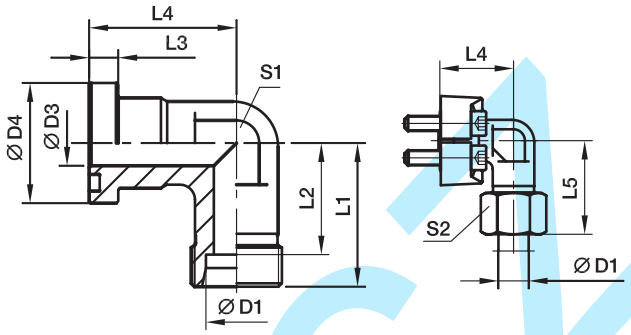

3000 PSI Series

Nom. flange size SAE (in.)	Nom. flange size ISO (DN)	D1[2]	D3	D4	L1	L2	L3	L4	L5	S1	S2	Bolts (metr.)	Bolts (unc.)	Weight (steel) kg/piece	Order code*	PN (bar)[1] CF	PN (bar)[1] 71
1/2	13	12S	12	30.2	50	42.5	6.7	44	58.5	22	24	M 08×25	5/16×1 1/4	0.24	**WFS32/12S**	210	210
1/2	13	15L	12	30.2	36	29.0	6.7	36	44.0	24	27	M 08×25	5/16×1 1/4	0.16	**WFS32/15L**	315	315
1/2	13	16S	12	30.2	38	29.5	6.7	36	48.0	24	30	M 08×25	5/16×1 1/4	0.17	**WFS32/16S**	350	350
1/2	13	18L	12	30.2	50	42.5	6.7	44	59.0	22	32	M 08×25	5/16×1 1/4	0.20	**WFS32/18L**	315	315
3/4	19	16S	19	38.1	64	55.5	6.7	53	73.5	27	30	M 10×30	3/8×1 1/4	0.36	**WFS33/16S**	350	350
3/4	19	18L	19	38.1	39	31.5	6.7	42	48.0	30	32	M 10×30	3/8×1 1/4	0.30	**WFS33/18L**	315	315
3/4	19	22L	19	38.1	41	33.5	6.7	42	50.0	30	36	M 10×30	3/8×1 1/4	0.28	**WFS33/22L**	160	160
3/4	19	20S	17	38.1	43	32.5	6.7	42	54.0	30	36	M 10×30	3/8×1 1/4	0.33	**WFS33/20S**	350	350
3/4	19	25S	17	38.1	45	33.0	6.7	42	57.0	30	46	M 10×30	3/8×1 1/4	0.32	**WFS33/25S**	350	350
1	25	20S	16/23	44.5	65	54.5	8.0	60	77.0	34	36	M 10×30	3/8×1 1/4	0.55	**WFS34/20S**	350	350
1	25	22L	18	44.5	65	57.5	8.0	60	74.0	34	36	M 10×30	3/8×1 1/4	0.53	**WFS34/22L**	160	160
1	25	28L	25	44.5	44	36.5	8.0	45	53.0	36	41	M 10×30	3/8×1 1/4	0.41	**WFS34/28L**	160	160
1	25	25S	20	44.5	48	36.5	8.0	45	57.0	36	46	M 10×30	3/8×1 1/4	0.52	**WFS34/25S**	350	350
1	25	30S	24	44.5	50	36.5	8.0	45	63.0	36	50	M 10×30	3/8×1 1/4	0.48	**WFS34/30S**	250	250
1 1/4	32	35L	32	50.8	57	46.5	8.0	50	68.0	41	50	M 10×35	–	0.53	**WFS35/35L/10[3]**	160	160
1 1/4	32	25S	27	50.8	55	43.0	8.0	60	67.0	41	46	M 10×35	–	0.72	**WFS35/25S/10[3]**	200	200
1 1/4	32	30S	28	50.8	57	43.5	8.0	50	70.0	41	50	M 10×35	–	0.67	**WFS35/30S/10[3]**	200	200
1 1/4	32	38S	28	50.8	59	43.0	8.0	50	74.0	46	60	M 10×35	–	0.71	**WFS35/38S/10[3]**	200	200
1 1/4	32	35L	32	50.8	57	46.5	8.0	50	68.0	41	50	M 12×40	7/16×1 1/2	0.53	**WFS35/35L**	160	160
1 1/4	32	25S	27	50.8	55	43.0	8.0	50	67.0	41	46	M 12×40	7/16×1 1/2	0.72	**WFS35/25S**	200	200
1 1/4	32	30S	28	50.8	57	43.5	8.0	50	70.0	41	50	M 12×40	7/16×1 1/2	0.67	**WFS35/30S**	200	200
1 1/4	32	38S	28	50.8	59	43.0	8.0	50	74.0	41	60	M 12×40	7/16×1 1/2	0.71	**WFS35/38S**	200	200
1 1/2	38	35L	30	60.3	78	67.5	8.0	66	83.0	50	50	M 12×35	1/2×1 1/2	1.36	**WFS36/35L**	160	160
1 1/2	38	42L	36	60.3	58	47.0	8.0	55	70.0	50	60	M 12×35	1/2×1 1/2	0.73	**WFS36/42L**	160	160
1 1/2	38	38S	36	60.3	64	48.0	8.0	55	79.0	50	60	M 12×35	1/2×1 1/2	0.95	**WFS36/38S**	200	200

[1] Pressure shown = Item deliverable

[2] L = light series; S = heavy series

$\frac{\text{PN (bar)}}{10}$ = PN (MPa)

Delivery without nut and ring.
Information on ordering complete fittings or alternative sealing materials see page N12.

[3] Order code for the elbow flange adapter assembled with FHS35/10CFX and M10×35 bolts.

See pages N16 and N19 for related flange halves depending on bolt sets.

Stainless steel parts may have dimensional deviations. Additional information on request.

*Please add the **suffixes** below according to the material/surface required.

Order code suffixes					
Material	Suffix surface and material	Example only flange adapter	Example incl. splitflanges, metr. bolts and O-ring	Example incl. splitflanges, UNC bolts and O-ring	Standard sealing material (no additional suffix needed)
Steel, zinc plated, Cr(VI)-free	CF	WFS32/16SCFX	WFS32/16SOMDCF	WFS32/16SOMDCFU	NBR
Stainless steel	71	WFS32/16S71X	WFS32/16SOMD71	–	VIT

N

WFS SAE 90° Elbow flange adapter

SAE Flange / EO 24° cone end
(ISO 6162-1/-2)

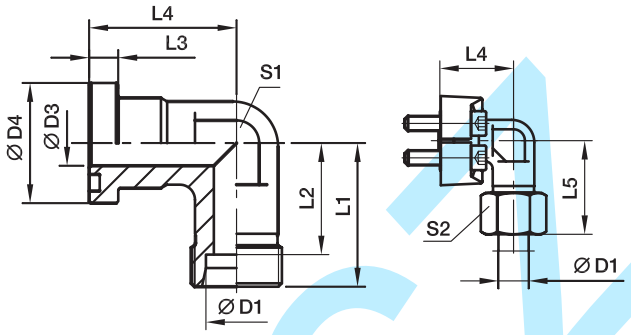

6000 PSI Series

Nom. flange size SAE (in.)	Nom. flange size ISO (DN)	D1[2]	D3	D4	L1	L2	L3	L4	L5	S1	S2	Bolts (metr.)	Bolts (unc.)	Weight (steel) kg/piece	Order code*	PN (bar)[1] CF	PN (bar)[1] 71
1/2	13	12S	12	31.8	50	42.5	7.7	44	58.5	22	24	M 08×30	5/16×1 1/4	0.22	**WFS62/12S**	420	420
1/2	13	14S	12	31.8	50	42.0	7.7	44	59.5	22	27	M 08×30	5/16×1 1/4	0.27	**WFS62/14S**	420	420
1/2	13	16S	12	31.8	38	29.5	7.7	39	48.0	24	30	M 08×30	5/16×1 1/4	0.19	**WFS62/16S**	420	420
3/4	19	16S	17	41.3	45	36.5	8.7	48	55.0	32	30	M 10×35	3/8×1 1/2	0.42	**WFS63/16S**	420	420
3/4	19	20S	17	41.3	46	35.5	8.7	48	57.0	32	36	M 10×35	3/8×1 1/2	0.42	**WFS63/20S**	420	400
3/4	19	25S	17	41.3	48	36.0	8.7	48	60.0	32	46	M 10×35	3/8×1 1/2	0.46	**WFS63/25S**	420	400
1	25	20S	16	47.6	65	54.5	9.5	62	75.0	34	36	M 12×45	7/16×1 3/4	0.60	**WFS64/20S**	420	400
1	25	25S	20	47.6	53	44.0	9.5	60	65.0	41	46	M 12×45	7/16×1 3/4	0.74	**WFS64/25S**	420	400
1	25	30S	25	47.6	55	41.5	9.5	60	68.0	41	50	M 12×45	7/16×1 3/4	0.64	**WFS64/30S**	420	400
1 1/4	32	25S	25	54.0	64	52.0	10.2	55	76.0	42	46	M 12×50	–	1.06	**WFS65/25S/12[3])**	420	400
1 1/4	32	30S	30	54.0	58	44.5	10.2	68	71.0	46	50	M 12×50	–	0.88	**WFS65/30S/12[3])**	420	400
1 1/4	32	38S	30	54.0	72	56.0	10.2	70	87.0	46	60	M 12×50	–	0.93	**WFS65/38S/12[3])**	420	315
1 1/4	32	25S	20/28	54.0	72	60.0	10.3	70	84.0	42	46	M 14×50	1/2×1 3/4	1.06	**WFS65/25S**	420	400
1 1/4	32	30S	30	54.0	72	44.5	10.2	68	71.0	46	50	M 14×50	1/2×1 3/4	0.88	**WFS65/30S**	420	400
1 1/4	32	38S	30	54.0	61	56.0	10.2	70	87.0	46	60	M 14×50	1/2×1 3/4	0.93	**WFS65/38S**	420	315
1 1/2	38	30S	25	63.5	76	63.5	12.5	77	90.0	50	50	M 16×55	5/8×2 1/4	1.75	**WFS66/30S**	420	400
1 1/2	38	38S	32	63.5	84	68.0	12.5	80	99.0	50	60	M 16×55	5/8×2 1/4	1.46	**WFS66/38S**	420	315

[1]) Pressure shown = Item deliverable

[2]) S = heavy series

$\frac{\text{PN (bar)}}{10}$ = PN (MPa)

Delivery without nut and ring.
Information on ordering complete fittings or alternative sealing materials see page N12.

[3]) Order code for the elbow flange adapter assembled with FHS65/12CFX and M12×50 bolts.

See pages N16 and N19 for related flange halves depending on bolt sets.

Stainless steel parts may have dimensional deviations. Additional information on request.

*Please add the **suffixes** below according to the material/surface required.

Order code suffixes					
Material	Suffix surface and material	Example only flange adapter	Example incl. splitflanges, metr. bolts and O-ring	Example incl. splitflanges, UNC bolts and O-ring	Standard sealing material (no additional suffix needed)
Steel, zinc plated, Cr(VI)-free	CF	WFS62/16SCFX	WFS62/16SOMDCF	WFS62/16SOMDCFU	NBR
Stainless steel	71	WFS62/16S71X	WFS62/16SOMD71	–	VIT

GFS-G SAE Straight flange adapter

SAE Flange / BSPP 60° cone end
(ISO 6162-1/-2) (ISO 8434-6)

O-ring face

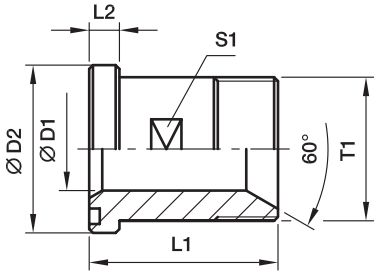

Flat face

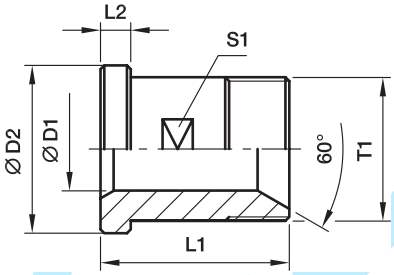

3000 PSI Series

Nom. flange size SAE (in.)	Nom. flange size ISO (DN)	T1	D1	D2	L1	L2	S1	Weight (steel) kg/piece	O-ring face Order code*	Flat face Order code*	PN (bar)[1] CF	PN (bar)[1] SS
1/2	13	**G 1/2**	12	30.2	50	6.7	19	0.11	**GFS32/12G**	**GFSG32/12G**	345	345
1/2	13	**G 3/8**	10	30.2	50	6.7	19	0.12	**GFS32/38G**	**GFSG32/38G**	345	345
3/4	19	**G 3/4**	17	38.1	55	6.7	27	0.18	**GFS33/34G**	**GFSG33/34G**	345	345
3/4	19	**G 1/2**	12	38.1	55	6.7	27	0.21	**GFS33/12G**	**GFSG33/12G**	345	345
1	25	**G 1**	22	44.4	60	8.0	32	0.28	**GFS34/1G**	**GFSG34/1G**	345	345
1	25	**G 3/4**	17	44.4	60	8.0	32	0.31	**GFS34/34G**	**GFSG34/34G**	345	345
1 1/4	32	**G 1 1/4**	27	50.8	65	8.0	41	0.41	**GFS35/114G**	**GFSG35/114G**	276	276
1 1/4	32	**G 1**	22	50.8	65	8.0	41	0.44	**GFS35/1G**	**GFSG35/1G**	276	276
1 1/2	38	**G 1 1/2**	32	60.3	70	8.0	46	0.58	**GFS36/112G**	**GFSG36/112G**	207	207
1 1/2	38	**G 1 1/4**	27	60.3	70	8.0	46	0.64	**GFS36/114G**	**GFSG36/114G**	207	207
2	51	**G 2**	40	71.4	75	9.5	55	0.89	**GFS38/2G**	**GFSG38/2G**	207	207
2	51	**G 1 1/2**	32	71.4	75	9.5	55	1.01	**GFS38/112G**	**GFSG38/112G**	207	207

6000 PSI Series

1/2	13	**G 1/2**	12	31.8	50	7.7	19	0.12	**GFS62/12G**	**GFSG62/12G**	420	420
1/2	13	**G 3/8**	10	31.8	50	7.7	19	0.13	**GFS62/38G**	**GFSG62/38G**	420	420
3/4	19	**G 3/4**	17	41.3	60	8.7	26	0.24	**GFS63/34G**	**GFSG63/34G**	420	420
3/4	19	**G 1/2**	12	41.3	60	8.7	26	0.22	**GFS63/12G**	**GFSG63/12G**	420	420
1	25	**G 1**	22	47.6	70	9.5	32	0.35	**GFS64/1G**	**GFSG64/1G**	420	420
1	25	**G 3/4**	17	47.6	70	9.5	32	0.40	**GFS64/34G**	**GFSG64/34G**	420	420
1 1/4	32	**G 1 1/4**	27	54.0	75	10.3	36	0.50	**GFS65/114G**	**GFSG65/114G**	420	420
1 1/4	32	**G 1 1/4**	27	54.0	75	10.3	36	0.50	**GFS65/114G/12**[3]	**GFSG65/114G/12**[3]	420	420
1 1/4	32	**G 1**	22	54.0	75	10.3	36	0.54	**GFS65/1G**	**GFSG65/1G**	420	420
1 1/4	32	**G 1**	22	54.0	75	10.3	36	0.54	**GFS65/1G/12**[3]	**GFSG65/1G/12**[3]	420	420
1 1/2	38	**G 1 1/2**	32	63.5	80	12.5	46	0.73	**GFS66/112G**	**GFSG66/112G**	420	420
1 1/2	38	**G 1 1/4**	27	63.5	80	12.5	46	0.80	**GFS66/114G**	**GFSG66/114G**	420	420
2	51	**G 2**	40	79.4	90	12.5	55	1.34	**GFS68/2G**	**GFSG68/2G**	420	420
2	51	**G 1 1/2**	32	79.4	90	12.5	55	1.54	**GFS68/112G**	**GFSG68/112G**	420	420

[1]) Pressure shown = Item deliverable

$\frac{\text{PN (bar)}}{10}$ = PN (MPa)

[3]) Order code for the straight flange adapter assembled with FHS65/12CFX and M12×45 bolts.

See pages N16 and N19 for related flange halves depending on bolt sets.

Stainless steel parts may have dimensional deviations. Additional information on request.

*Please add the **suffixes** below according to the material/surface required.

Order code suffixes					
Material	Suffix surface and material	Example only flange adapter	Example incl. splitflanges, metr. bolts and O-ring	Example incl. splitflanges, UNC bolts and O-ring	Standard sealing material (no additional suffix needed)
Steel, zinc plated, Cr(VI)-free	CF	GFS32/12GCF	GFS32/12GCFM	GFS32/12GCFU	NBR
Stainless steel	SS	GFS32/12GSS	GFS32/12GSSM	–	VIT

WFS-G SAE 90° Elbow flange adapter

SAE Flange (ISO 6162-1/-2) / BSPP 60° cone end (ISO 8434-6)

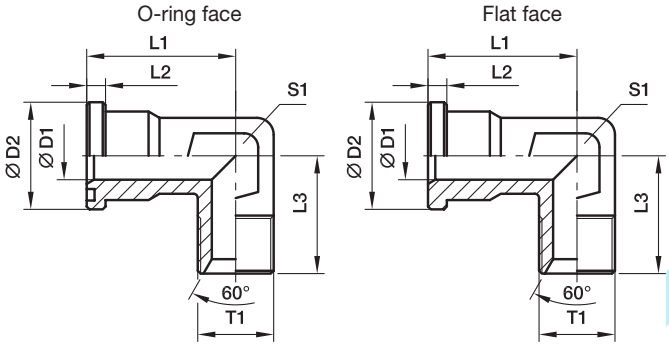

3000 PSI Series

Nom. flange size SAE (in.)	Nom. flange size ISO (DN)	T1	D1	D2	L1	L2	L3	S1	Weight (steel) kg/piece	O-ring face Order code*	Flat face Order code*	PN (bar)[1] CF	PN (bar)[1] SS
1/2	13	**G 1/2**	12	30.2	44	6.7	50	22	0.19	**WFS32/12G**	**WFSG32/12G**	345	345
1/2	13	**G 3/8**	10	30.2	44	6.7	50	22	0.20	**WFS32/38G**	**WFSG32/38G**	345	345
3/4	19	**G 1/2**	12	38.1	53	6.7	64	27	0.42	**WFS33/12G**	**WFSG33/12G**	345	345
3/4	19	**G 3/4**	17	38.1	53	6.7	64	27	0.35	**WFS33/34G**	**WFSG33/34G**	345	345
3/4	19	**G 1**	19	38.1	53	6.7	64	27	0.36	**WFS33/1G**	**WFSG33/1G**	345	345
1	25	**G 3/4**	17	44.4	60	8.0	65	34	0.71	**WFS34/34G**	**WFSG34/34G**	345	345
1	25	**G 1**	22	44.4	60	8.0	65	34	0.52	**WFS34/1G**	**WFSG34/1G**	345	345
1	25	**G 1 1/4**	25	44.4	60	8.0	65	34	0.62	**WFS34/114G**	**WFSG34/114G**	345	345
1 1/4	32	**G 1**	22	50.8	55	8.0	64	42	0.84	**WFS35/1G**	**WFSG35/1G**	276	276
1 1/4	32	**G 1 1/4**	28	50.8	55	8.0	64	42	0.76	**WFS35/114G**	**WFSG35/114G**	276	276
1 1/2	38	**G 1 1/4**	28	60.3	66	8.0	78	50	1.49	**WFS36/114G**	**WFSG36/114G**	207	207
1 1/2	38	**G 1 1/2**	34	60.3	66	8.0	78	50	1.23	**WFS36/112G**	**WFSG36/112G**	207	207

6000 PSI Series

1/2	13	**G 1/2**	12	31.8	44	7.7	50	22	0.22	**WFS62/12G**	**WFSG62/12G**	420	420
1/2	13	**G 3/8**	10	31.8	44	7.7	50	22	0.37	**WFS62/34G**	**WFSG62/34G**	420	420
3/4	19	**G 1/2**	14	41.3	53	8.7	64	27	0.88	**WFS63/12G**	**WFSG63/12G**	420	420
3/4	19	**G 3/4**	17	41.3	53	8.7	64	27	0.37	**WFS63/34G**	**WFSG63/34G**	420	420
3/4	19	**G 1**	19	41.3	53	8.7	64	27	0.41	**WFS63/1G**	**WFSG63/1G**	420	420
1	25	**G 3/4**	17	47.6	60	9.5	62	34	0.69	**WFS64/34G**	**WFSG64/34G**	420	420
1	25	**G 1**	22	47.6	60	9.5	62	34	0.59	**WFS64/1G**	**WFSG64/1G**	420	420
1	25	**G 1 1/4**	25	47.6	60	9.5	62	34	1.70	**WFS64/114G**	**WFSG64/114G**	420	420
1 1/4	32	**G 1**	22	54.0	70	10.3	72	42	1.17	**WFS65/1G**	**WFSG65/1G**	420	420
1 1/4	32	**G 1**	22	54.0	70	10.3	72	42	1.17	**WFS65/1G/12**[3]	**WFSG65/1G/12**[3]	420	420
1 1/4	32	**G 1 1/4**	27	54.0	70	10.3	72	42	0.99	**WFS65/114G**	**WFSG65/114G**	420	420
1 1/4	32	**G 1 1/4**	27	54.0	70	10.3	72	42	0.99	**WFS65/114G/12**[3]	**WFSG65/114G/12**[3]	420	420
1 1/2	38	**G 1 1/4**	27	63.5	80	12.5	84	50	1.70	**WFS66/114G**	**WFSG66/114G**	420	420
1 1/2	38	**G 1 1/2**	32	63.5	80	12.5	84	50	1.47	**WFS66/112G**	**WFSG66/112G**	420	420

[1]) Pressure shown = Item deliverable

$\frac{\text{PN (bar)}}{10}$ = PN (MPa)

[3]) Order code for the elbow flange adapter assembled with FHS65/12CFX and M12×45 bolts.

See pages N16 and N19 for related flange halves depending on bolt sets.

Stainless steel parts may have dimensional deviations. Additional information on request.

*Please add the **suffixes** below according to the material/surface required.

Order code suffixes					
Material	Suffix surface and material	Example only flange adapter	Example incl. splitflanges, metr. bolts and O-ring	Example incl. splitflanges, UNC bolts and O-ring	Standard sealing material (no additional suffix needed)
Steel, zinc plated, Cr(VI)-free	CF	WFS32/12GCF	WFS32/12GCFM	WFS32/12GCFU	NBR
Stainless steel	SS	WFS32/12GSS	WFS32/12GSSM	–	VIT

GFS-N SAE Flange adapters straight

SAE Flange / Male NPT thread
(ISO 6162-1/-2) (SAE J476)

O-ring face

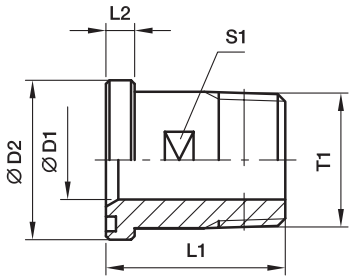

Flat face

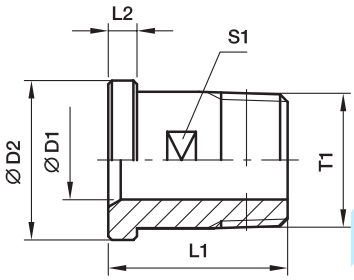

3000 PSI Series

Nom. flange size SAE (in.)	Nom. flange size ISO (DN)	T1	D1	D2	L1	L2	S1	Weight (steel) kg/piece	O-ring face Order code*	Flat face Order code*	PN (bar)[1] CF	PN (bar)[1] SS
1/2	13	**1/2 NPT**	12	30.2	50	6.7	19	0.12	**GFS32/12N**	**GFSG32/12N**	345	345
1/2	13	**3/8 NPT**	10	30.2	50	6.7	19	0.12	**GFS32/38N**	**GFSG32/38N**	345	345
3/4	19	**3/4 NPT**	17	38.1	55	6.7	27	0.18	**GFS33/34N**	**GFSG33/34N**	345	345
3/4	19	**1/2 NPT**	12	38.1	55	6.7	27	0.16	**GFS33/12N**	**GFSG33/12N**	345	345
1	25	**1 NPT**	22	44.4	60	8.0	32	0.29	**GFS34/1N**	**GFSG34/1N**	345	345
1	25	**3/4 NPT**	17	44.4	60	8.0	32	0.32	**GFS34/34N**	**GFSG34/34N**	345	345
1 1/4	32	**1 1/4 NPT**	27	50.8	65	8.0	41	0.42	**GFS35/114N**	**GFSG35/114N**	276	276
1 1/4	32	**1 NPT**	22	50.8	65	8.0	41	0.44	**GFS35/1N**	**GFSG35/1N**	276	276
1 1/2	38	**1 1/2 NPT**	32	60.3	70	8.0	46	0.62	**GFS36/112N**	**GFSG36/112N**	207	207
1 1/2	38	**1 1/4 NPT**	27	60.3	70	8.0	46	0.66	**GFS36/114N**	**GFSG36/114N**	207	207
2	51	**2 NPT**	40	71.4	75	9.5	55	0.99	**GFS38/2N**	**GFSG38/2N**	207	207
2	51	**1 1/2 NPT**	32	71.4	75	9.5	55	1.05	**GFS38/112N**	**GFSG38/112N**	207	207

6000 PSI Series

1/2	13	**1/2 NPT**	12	31.8	50	7.7	19	0.09	**GFS62/12N**	**GFSG62/12N**	420	420
1/2	13	**3/8 NPT**	10	31.8	50	7.7	19	0.13	**GFS62/38N**	**GFSG62/38N**	420	420
3/4	19	**3/4 NPT**	17	41.3	60	8.7	26	0.24	**GFS63/34N**	**GFSG63/34N**	420	420
3/4	19	**1/2 NPT**	12	41.3	60	8.7	26	0.25	**GFS63/12N**	**GFSG63/12N**	420	420
1	25	**1 NPT**	22	47.6	70	9.5	32	0.41	**GFS64/1N**	**GFSG64/1N**	420	420
1	25	**3/4 NPT**	17	47.6	70	9.5	32	0.43	**GFS64/34N**	**GFSG64/34N**	420	420
1 1/4	32	**1 1/4 NPT**	27	54.0	75	10.3	36	0.57	**GFS65/114N**	**GFSG65/114N**	420	420
1 1/4	32	**1 1/4 NPT**	27	54.0	75	10.3	36	0.57	**GFS65/114N/12**[3]	**GFSG65/114N/12**[3]	420	420
1 1/4	32	**1 NPT**	22	54.0	75	10.3	36	0.57	**GFS65/1N**	**GFSG65/1N**	420	420
1 1/4	32	**1 NPT**	22	54.0	75	10.3	36	0.57	**GFS65/1N/12**[3]	**GFSG65/1N/12**[3]	420	420
1 1/2	38	**1 1/2 NPT**	32	63.5	80	12.5	46	0.77	**GFS66/112N**	**GFSG66/112N**	420	420
1 1/2	38	**1 1/4 NPT**	27	63.5	80	12.5	46	0.81	**GFS66/114N**	**GFSG66/114N**	420	420
2	51	**2 NPT**	40	79.4	90	12.5	55	1.41	**GFS68/2N**	**GFSG68/2N**	420	420
2	51	**1 1/2 NPT**	32	79.4	90	12.5	55	1.57	**GFS68/112N**	**GFSG68/112N**	420	420

[1]) Pressure shown = Item deliverable

$\frac{\text{PN (bar)}}{10}$ = PN (MPa)

[3]) Order code for the straight flange adapter assembled with FHS65/12CFX and M12×45 bolts.

See pages N16 and N19 for related flange halves depending on bolt sets.

Stainless steel parts may have dimensional deviations. Additional information on request.

*Please add the **suffixes** below according to the material/surface required.

Order code suffixes					
Material	Suffix surface and material	Example only flange adapter	Example incl. splitflanges, metr. bolts and O-ring	Example incl. splitflanges, UNC bolts and O-ring	Standard sealing material (no additional suffix needed)
Steel, zinc plated, Cr(VI)-free	CF	GFS32/12NCF	GFS32/12NCFM	GFS32/12NCFU	NBR
Stainless steel	SS	GFS32/12NSS	GFS32/12NSSM	–	VIT

L(O)HQ SAE Straight flange adapter

SAE Flange / O-Lok® ORFS end
(ISO 6162-1/-2)

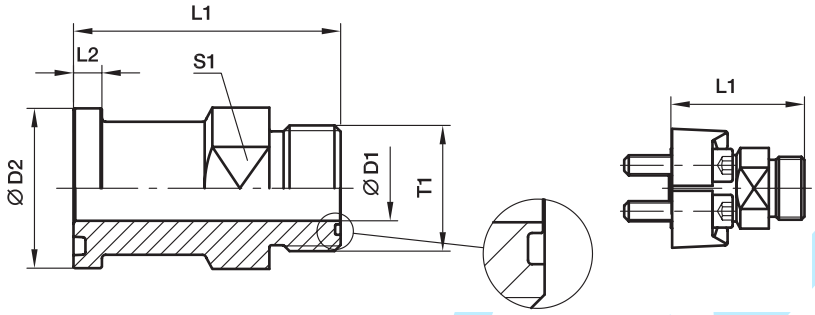

3000 PSI Series

Nom. flange size		Tube								Weight (steel)	O-ring face without ORFS O-ring	O-ring face include ORFS O-ring	PN (bar)[1]
SAE (in.)	ISO (DN)	(metr.)	(in.)	T1	D1	D2	L1	L2	S1	kg/piece	Order code*	Order code*	S
3/4	19	18, 20	3/4	**1 3/16-12UN**	15.5	38.1	70.9	6.7	35.0	0.21	**12LHQ1**	**12LOHQ1**	350
1	25	22, 25	7/8, 1	**1 7/16-12UN**	20.6	44.5	71.4	8.0	41.0	0.30	**16LHQ1**	**16LOHQ1**	350
1 1/4	32	28, 30, 32	1 1/4	**1 11/16-12UN**	26.0	50.8	81.5	8.0	47.5	0.31	**20LHQ1**	**20LOHQ1**	280
1 1/2	38	35, 38	1 1/2	**2-12UN**	32.0	60.3	83.6	8.0	54.0	0.56	**24LHQ1**	**24LOHQ1**	210

6000 PSI Series

3/4	19	18, 20	3/4	**1 3/16-12UN**	15.5	41.3	76.7	8.8	35.0	0.21	**12LHQ2**	**12LOHQ2**	420
1	25	18, 20	3/4	**1 3/16-12UN**	15.5	47.6	84.8	9.5	35.0	0.26	**12-16LHQ2**	**12-16LOHQ2**	420
1	25	22, 27	3/4, 7/8	**1 7/16-12UN**	20.6	47.6	85.3	9.5	41.0	0.30	**16LHQ2**	**16LOHQ2**	420
1 1/4	32	28, 30, 32	1 1/4	**1 11/16-12UN**	26.0	54.0	88.4	10.3	47.5	0.31	**20LHQ2**	**20LOHQ2**	345
1 1/2	38	35, 38	1 1/2	**2-12UN**	32.0	63.5	105.2	12.6	54.0	0.56	**24LHQ2**	**24LOHQ2**	310

[1]) Pressure shown = Item deliverable

$\frac{\text{PN (bar)}}{10}$ = PN (MPa)

See pages N16 and N19 for related flange halves depending on bolt sets.

Stainless steel parts may have dimensional deviations. Additional information on request.

*Please add the **suffixes** below according to the material/surface required.

Order code suffixes				
Material	Suffix surface and material	Example only flange adapter without ORFS O-ring	Example only flange adapter incl. ORFS O-ring	Standard sealing material (no additional suffix needed)
Steel, oiled	S	12LHQ1-S	12LOHQ1-S	NBR

kovaz.ir

L(O)EMQ SAE 90° Elbow flange adapter

SAE Flange / O-Lok® ORFS end
(ISO 6162-1/-2)

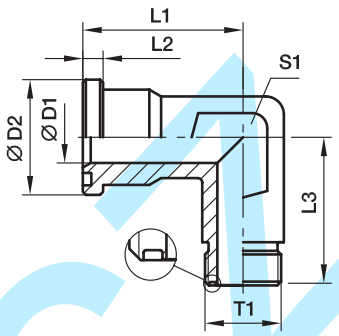

3000 PSI Series

Nom. flange size		Tube									Weight (steel)	O-ring face without ORFS O-ring	O-ring face include ORFS O-ring	PN (bar)[1]	
SAE (in.)	ISO (DN)	(metr.)	(in.)	T1	D1	D2	L1	L2	L3	S1	kg/piece	Order code*	Order code*	CF	SS
1/2	13	8, 10	3/8	**11/16-16UN**	6	30.2	44	6.7	50	22	0.40	**6-8LEMQ1**	**6-8LOEMQ1**	350	350
1/2	13	12	1/2	**13/16-16UN**	9	30.2	44	6.7	50	22	0.36	**8LEMQ1**	**8LOEMQ1**	350	350
1/2	13	14, 15, 16	5/8	**1-14UN**	12	30.2	44	6.7	50	22	0.32	**10-8LEMQ1**	**10-8LOEMQ1**	350	350
3/4	19	14, 15, 16	5/8	**1-14UN**	12	38.1	53	6.7	64	27	0.47	**10-12LEMQ1**	**10-12LOEMQ1**	350	350
3/4	19	18, 20	3/4	**1 3/16-12UN**	15	38.1	53	6.7	64	27	0.44	**12LEMQ1**	**12LOEMQ1**	350	350
1	25	18, 20	3/4	**1 3/16-12UN**	15	44.4	60	8.0	65	34	0.52	**12-16LEMQ1**	**12-16LOEMQ1**	350	350
1	25	22, 25	7/8, 1	**1 7/16-12UN**	20	44.4	60	8.0	65	34	0.50	**16LEMQ1**	**16LOEMQ1**	350	350
1 1/4	32	22, 25	7/8, 1	**1 7/16-12UN**	20	50.8	55	8.0	64	42	0.48	**16-20LEMQ1**	**16-20LOEMQ1**	278	278
1 1/4	32	28, 30, 32	1 1/4	**1 11/16-12UN**	26	50.8	55	8.0	64	42	0.56	**20LEMQ1**	**20LOEMQ1**	278	278
1 1/2	38	28, 30, 32	1 1/4	**1 11/16-12UN**	26	60.3	66	8.0	78	50	0.73	**20-24LEMQ1**	**20-24LOEMQ1**	207	207
1 1/2	38	35, 38	1 1/2	**2-12UN**	32	60.3	66	8.0	78	50	0.69	**24LEMQ1**	**24LOEMQ1**	207	207

6000 PSI Series

1/2	13	8, 10	3/8	**11/16-16UN**	6	31.8	44	7.7	50	22	0.40	**6-8LEMQ2**	**6-8LOEMQ2**	420	420
1/2	13	12	1/2	**13/16-16UN**	9	31.8	44	7.7	50	22	0.36	**8LEMQ2**	**8LOEMQ2**	420	420
1/2	13	14, 15, 16	5/8	**1-14UN**	12	31.8	44	7.7	50	22	0.32	**10-8LEMQ2**	**10-8LOEMQ2**	420	420
3/4	19	14, 15, 16	5/8	**1-14UN**	12	41.3	53	8.7	64	27	0.47	**10-12LEMQ2**	**10-12LOEMQ2**	420	420
3/4	19	18, 20	3/4	**1 3/16-12UN**	15	41.3	53	8.7	64	27	0.44	**12LEMQ2**	**12LOEMQ2**	420	420
1	25	18, 20	3/4	**1 3/16-12UN**	15	47.6	60	9.5	62	34	0.52	**12-16LEMQ2**	**12-16LOEMQ2**	420	420
1	25	22, 25	7/8, 1	**1 7/16-12UN**	20	47.6	60	9.5	62	34	0.50	**16LEMQ2**	**16LOEMQ2**	420	420
1 1/4	32	22, 25	7/8, 1	**1 7/16-12UN**	20	54.0	70	10.3	72	42	0.48	**16-20LEMQ2**	**16-20LOEMQ2**	420	420
1 1/4	32	28, 30, 32	1 1/4	**1 11/16-12UN**	26	54.0	70	10.3	72	42	0.56	**20LEMQ2**	**20LOEMQ2**	345	345
1 1/2	38	28, 30, 32	1 1/4	**1 11/16-12UN**	26	63.5	80	12.5	84	50	0.73	**20-24LEMQ2**	**20-24LOEMQ2**	345	345
1 1/2	38	35, 38	1 1/2	**2-12UN**	32	63.5	80	12.5	84	50	0.69	**24LEMQ2**	**24LOEMQ2**	310	310

[1]) Pressure shown = Item deliverable

$\frac{\text{PN (bar)}}{10}$ = PN (MPa)

See pages N16 and N19 for related flange halves depending on bolt sets.

Stainless steel parts may have dimensional deviations. Additional information on request.

*Please add the **suffixes** below according to the material/surface required.

Order code suffixes				
Material	Suffix surface and material	Example only flange adapter without ORFS O-ring	Example only flange adapter incl. ORFS O-ring	Standard sealing material (no additional suffix needed)
Steel, zinc plated, Cr(VI)-free	CF	12LEMQ1CF	12LOEMQ1CF	NBR
Stainless steel	SS	12LEMQ1SS	12LOEMQ1SS	VIT

L(O)VQ SAE 45° Elbow flange adapter

SAE Flange / O-Lok® ORFS end
(ISO 6162-1/-2)

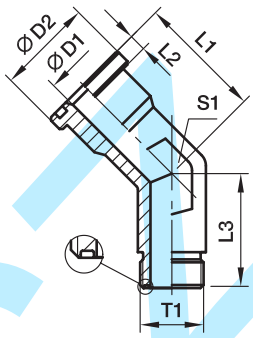

3000 PSI Series

Nom. flange size SAE (in.)	ISO (DN)	Tube (metr.)	Tube (in.)	T1	D1	D2	L1	L2	L3	S1	Weight (steel) kg/piece	O-ring face without ORFS O-ring Order code*	O-ring face include ORFS O-ring Order code*	PN (bar)[1] S
3/4	19	18, 20	3/4	**1 3/16-12UN**	15.5	38.1	40.0	6.7	30.5	36.0	0.29	**12LVQ1**	**12LOVQ1**	350
1	25	22, 25	7/8, 1	**1 7/16-12UN**	20.5	44.5	47.0	8.0	32.0	41.0	0.39	**16LVQ1**	**16LOVQ1**	350
1 1/4	32	28, 30, 32	1 1/4	**1 11/16-12UN**	26.0	50.8	61.0	8.0	32.8	47.5	0.45	**20LVQ1**	**20LOVQ1**	280
1 1/2	38	35, 38	1 1/2	**2-12UN**	32.0	60.3	73.7	8.0	36.8	63.5	0.57	**24LVQ1**	**24LOVQ1**	210

6000 PSI Series

3/4	19	18, 20	3/4	**1 3/16-12UN**	15.5	41.3	46.5	8.8	30.5	36.0	0.29	**12LVQ2**	**12LOVQ2**	420
1	25	22, 25	7/8, 1	**1 7/16-12UN**	20.5	47.6	52.6	9.5	32.0	41.0	0.39	**16LVQ2**	**16LOVQ2**	420
1 1/4	32	28, 30, 32	1 1/4	**1 11/16-12UN**	26.0	54.0	61.0	10.3	32.8	47.5	0.45	**20LVQ2**	**20LOVQ2**	345
1 1/2	38	35, 38	1 1/2	**2-12UN**	32.0	63.5	73.7	12.6	36.8	63.5	0.57	**24LVQ2**	**24LOVQ2**	310

[1]) Pressure shown = Item deliverable

$\frac{\text{PN (bar)}}{10}$ = PN (MPa)

Stainless steel on request.

See pages N16 and N19 for related flange halves depending on bolt sets.

Stainless steel parts may have dimensional deviations. Additional information on request.

*Please add the **suffixes** below according to the material/surface required.

Order code suffixes				
Material	Suffix surface and material	Example only flange adapter without ORFS O-ring	Example only flange adapter incl. ORFS O-ring	Standard sealing material (no additional suffix needed)
Steel, oiled	S	12LVQ1-S	12LOVQ1-S	NBR

kovaz.cz

XHQ SAE Straight flange adapter

SAE Flange / Triple-Lok® 37° flare end
(ISO 6162-1/-2)

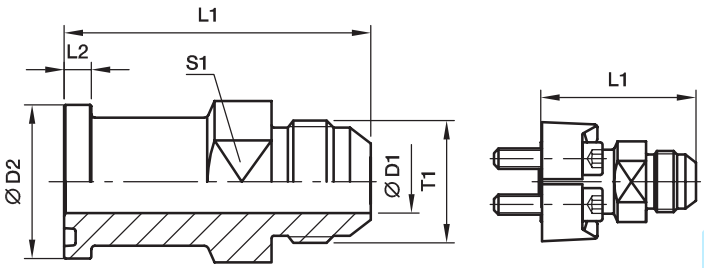

3000 PSI Series

Nom. flange size SAE (in.)	ISO (DN)	Tube (metr.)	Tube (in.)	T1	D1	D2	L1	L2	S1	Weight (steel) kg/piece	Order code*	PN (bar)[1] S
3/4	19	18, 20	3/4	**1 1/16-12UN**	15.5	38.1	70.4	6.7	35.0	0.21	**12XHQ1**	350
1	25	22, 25	7/8, 1	**1 5/16-12UN**	21.5	44.5	73.9	8.0	41.0	0.30	**16XHQ1**	350
1 1/4	32	28, 30, 32	1 1/4	**1 5/8-12UN**	27.5	50.8	85.3	8.0	47.5	0.31	**20XHQ1**	275
1 1/2	38	35, 38	1 1/2	**1 7/8-12UN**	33.5	60.3	90.7	8.0	54.0	0.56	**24XHQ1**	210
2	51	50	2	**2 1/2-12UN**	45.0	71.4	102.6	9.5	66.5	1.10	**32XHQ1**	138

6000 PSI Series

3/4	19	18. 20	3/4	**1 1/16-12UN**	15.5	41.3	78.2	8.8	35.0	0.21	**12XHQ2**	350
1	25	22. 25	7/8, 1	**1 5/16-12UN**	21.5	47.6	87.1	9.5	41.0	0.30	**16XHQ2**	350
1 1/4	32	28, 30, 32	1 1/4	**1 5/8-12UN**	27.5	54.0	91.4	10.3	47.5	0.31	**20XHQ2**	275
1 1/2	38	35. 38	1 1/2	**1 7/8-12UN**	33.5	63.5	110.2	12.6	54.0	0.56	**24XHQ2**	210

[1]) Pressure shown = Item deliverable

$\frac{\text{PN (bar)}}{10}$ = PN (MPa)

Stainless steel on request.

See pages N16 and N19 for related flange halves depending on bolt sets.

*Please add the **suffixes** below according to the material/surface required.

Order code suffixes			
Material	Suffix surface and material	Example only flange adapter	Standard sealing material (no additional suffix needed)
Steel, oiled	S	12XHQ1-S	NBR

kovax.cz

XEMQ SAE 90° Elbow flange adapter

SAE Flange / Triple-Lok® 37° flare end
(ISO 6162-1/-2)

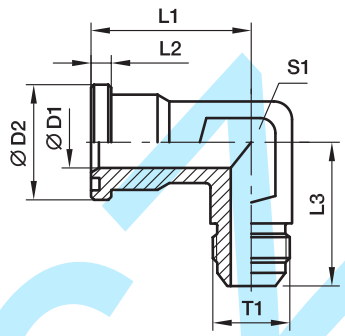

3000 PSI Series

Nom. flange size SAE (in.)	ISO (DN)	Tube (metr.)	Tube (in.)	T1	D1	D2	L1	L2	L3	S1	Weight (steel) kg/piece	Order code*	PN (bar)[1] S	PN (bar)[1] SS
1/2	13	12	1/2	**3/4-16UNF**	10	30.2	44	6.7	50	22	0.20	**8XEMQ1**	350	350
1/2	13	14, 15, 16	5/8	**7/8-14UNF**	12	30.2	44	6.7	50	22	0.20	**10-8XEMQ1**	350	350
3/4	19	14, 15, 16	5/8	**7/8-14UNF**	19	38.1	53	6.7	64	27	0.29	**10-12XEMQ1**	350	350
3/4	19	18, 20	3/4	**1 1/16-12UN**	19	38.1	53	6.7	64	27	0.29	**12XEMQ1**	350	350
3/4	19	25	1	**1 5/16-12UN**	19	38.1	53	6.7	64	27	0.29	**16-12XEMQ1**	350	350
1	25	18, 20	3/4	**1 1/16-12UN**	22	44.4	60	8.0	65	34	0.39	**12-16XEMQ1**	350	350
1	25	25	1	**1 5/16-12UN**	22	44.4	60	8.0	65	34	0.39	**16XEMQ1**	350	350
1	25	30, 32	1 1/4	**1 5/8-12UN**	22	44.4	60	8.0	65	34	0.39	**20-16XEMQ1**	275	275
1 1/4	32	25	1	**1 5/16-12UN**	28	50.8	55	8.0	64	42	0.45	**16-20XEMQ1**	275	275
1 1/4	32	30, 32	1 1/4	**1 5/8-12UN**	28	50.8	55	8.0	64	42	0.45	**20XEMQ1**	275	275
1 1/2	38	30, 32	1 1/4	**1 5/8-12UN**	38	60.3	66	8.0	78	50	0.57	**20-24XEMQ1**	210	210
1 1/2	38	38	1 1/2	**1 7/8-12UN**	38	60.3	66	8.0	78	50	0.57	**24XEMQ1**	210	210

6000 PSI Series

1/2	13	12	1/2	**3/4-16UNF**	12	31.8	44	7.7	50	22	0.20	**8XEMQ2**	350	350
1/2	13	14, 15, 16	5/8	**7/8-14UNF**	12	31.8	44	7.7	50	22	0.20	**10-8XEMQ2**	350	350
3/4	19	14, 15, 16	5/8	**7/8-14UNF**	18	41.3	53	8.7	64	27	0.29	**10-12XEMQ2**	350	350
3/4	19	18, 20	3/4	**1 1/16-12UN**	18	41.3	53	8.7	64	27	0.29	**12XEMQ2**	350	350
3/4	19	25	1	**1 5/16-12UN**	18	41.3	53	8.7	64	27	0.29	**16-12XEMQ2**	350	350
1	25	18, 20	3/4	**1 1/16-12UN**	22	47.6	60	9.5	62	34	0.39	**12-16XEMQ2**	350	350
1	25	25	1	**1 5/16-12UN**	22	47.6	60	9.5	62	34	0.39	**16XEMQ2**	350	350
1	25	30, 32	1 1/4	**1 5/8-12UN**	22	47.6	60	9.5	62	34	0.39	**20-16XEMQ2**	275	275
1 1/4	32	25	1	**1 5/16-12UN**	27	54.0	70	10.3	70	42	0.45	**16-20XEMQ2**	350	350
1 1/4	32	30, 32	1 1/4	**1 5/8-12UN**	27	54.0	70	10.3	72	42	0.45	**20XEMQ2**	275	275
1 1/2	38	30, 32	1 1/4	**1 5/8-12UN**	32	63.5	80	12.5	87	50	0.57	**20-24XEMQ2**	275	275
1 1/2	38	38	1 1/2	**1 7/8-12UN**	32	63.5	80	12.5	87	50	0.57	**24XEMQ2**	210	210

[1]) Pressure shown = Item deliverable

$\frac{\text{PN (bar)}}{10}$ = PN (MPa)

See pages N16 and N19 for related flange halves depending on bolt sets.

Stainless steel parts may have dimensional deviations. Additional information on request.

*Please add the **suffixes** below according to the material/surface required.

Order code suffixes			
Material	Suffix surface and material	Example only flange adapter	Standard sealing material (no additional suffix needed)
Steel, zinc plated, Cr(VI)-free	CF	8XEMQ1CF	NBR
Stainless steel	SS	8XEMQ1SS	VIT

XVQ SAE 45° Elbow flange adapter

SAE Flange / Triple-Lok® 37° flare end
(ISO 6162-1/-2)

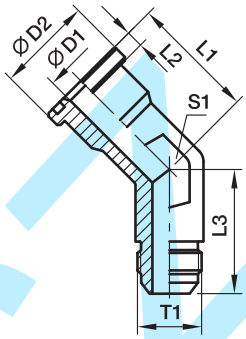

3000 PSI Series

Nom. flange size		Tube										PN (bar)[1]
SAE (in.)	ISO (DN)	(metr.)	(in.)	T1	D1	D2	L1	L2	L3	S1	Weight (steel) kg/piece	Order code*	S
3/4	19	18, 20	3/4	**1 1/16-12UN**	15.5	38.1	40.1	6.7	32.3	36.0	0.29	**12XVQ1**	350
1	25	22, 25	7/8, 1	**1 5/16-12UN**	21.4	44.5	47.0	8.0	37.3	41.0	0.39	**16XVQ1**	350
1 1/4	32	28, 30, 32	1 1/4	**1 5/8-12UN**	27.4	50.8	61.0	8.0	40.4	47.5	0.45	**20XVQ1**	275
1 1/2	38	35, 38	1 1/2	**1 7/8-12UN**	33.3	60.3	73.7	8.0	45.2	63.5	0.57	**24XVQ1**	210
2	51	50	2	**2 1/2-12UN**	45.2	71.4	76.2	9.5	56.4	73.0	1.15	**32XVQ1**	138

6000 PSI Series

3/4	19	18, 20	3/4	**1 1/16-12UN**	15.5	41.3	46.5	8.8	32.3	36.0	0.42	**12XVQ2**	350
1	25	22, 25	7/8, 1	**1 5/16-12UN**	21.4	47.6	52.6	9.5	37.3	41.0	0.52	**16XVQ2**	350
1 1/4	32	28, 30, 32	1 1/4	**1 5/8-12UN**	27.4	54.0	61.0	10.3	40.4	47.5	0.56	**20XVQ2**	275
1 1/2	38	35, 38	1 1/2	**1 7/8-12UN**	33.3	63.5	73.7	12.6	45.2	63.5	0.69	**24XVQ2**	210

[1]) Pressure shown = Item deliverable

$\frac{\text{PN (bar)}}{10}$ = PN (MPa)

Stainless steel on request.

See pages N16 and N19 for related flange halves depending on bolt sets.

*Please add the **suffixes** below according to the material/surface required.

Order code suffixes			
Material	Suffix surface and material	Example only flange adapter	Standard sealing material (no additional suffix needed)
Steel, oiled	S	12XVQ1-S	NBR

kovax.cz

ASR SAE Straight flange adapter

SAE Flange / Butt weld reducer tube end
(ISO 6162-1/-2)

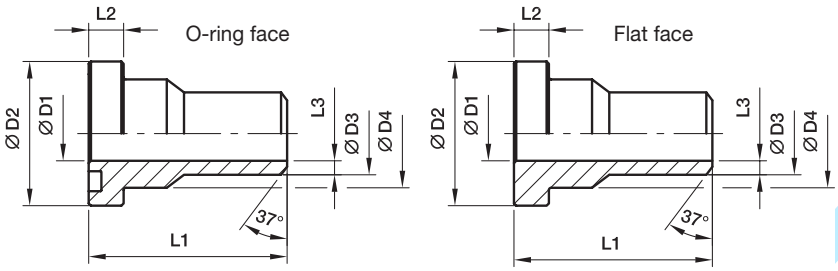

3000 PSI Series

Nom. flange size SAE (in.)	Nom. flange size ISO (DN)	Tube	D1	D2	D3	D4	L1	L2	L3	Weight (steel) kg/piece	O-ring face Order code*	Flat face Order code*	PN (bar)[1] S	PN (bar)[1] SS
1/2	13	18×4.5	10	30.2	18.0	24.0	45	6.7	4.0	0.12	**ASR32/18X4.5**	**ASRG32/18X4.5**	345	345
3/4	19	22×4.5	13	38.1	22.0	31.5	50	6.7	4.5	0.18	**ASR33/22X4.5**	**ASRG33/22X4.5**	345	345
1	25	28×4.5	19	44.4	28.0	38.0	55	8.0	4.5	0.26	**ASR34/28X4.5**	**ASRG34/28X4.5**	345	345
1 1/4	32	35×5.0	25	50.8	35.0	43.0	60	8.0	5.0	0.31	**ASR35/35X5**	**ASRG35/35X5**	276	276
1 1/2	38	43×6.0	31	60.3	43.0	50.0	65	8.0	6.0	0.51	**ASR36/43X6**	**ASRG36/43X6**	207	207
2	51	50×6.0	38	71.4	50.0	62.0	70	9.5	6.0	0.80	**ASR38/50X6**	**ASRG38/50X6**	207	207
2 1/2	64	62×7.5	47	84.1	62.0	74.0	75	9.5	7.5	1.24	**ASR310/62X7.5**	**ASRG310/62X7.5**	172	172
3	76	76×9.0	58	101.6	76.0	90.0	85	9.5	9.0	1.95	**ASR312/76X9**	**ASRG312/76X9**	138	138
3 1/2	89	90×10.0	70	114.3	90.0	102.0	90	11.2	10.0	2.15	**ASR314/90X10**	**ASRG314/90X10**	34	34
4	102	102×7.0	88	127.0	102.0	114.0	100	11.2	7.0	2.62	**ASR316/102X7**	**ASRG316/102X7**	34	34

6000 PSI Series

1/2	13	18×4.0	10	31.8	18.0	24.0	45	7.7	4.0	0.12	**ASR62/18X4**	**ASRG62/18X4**	420	420
3/4	19	22×4.5	13	41.3	22.0	32.0	50	8.7	4.5	0.20	**ASR63/22X4.5**	**ASRG63/22X4.5**	420	420
1	25	28×5.0	18	47.6	28.0	38.0	55	9.5	5.0	0.31	**ASR64/28X5**	**ASRG64/28X5**	420	420
1 1/4	32	35×6.5	22	54.0	35.0	44.0	60	10.3	6.5	0.46	**ASR65/35X6.5**	**ASRG65/35X6.5**	420	420
1 1/2	38	44×7.5	29	63.5	44.0	51.0	65	12.5	7.5	0.69	**ASR66/44X7.5**	**ASRG66/44X7.5**	420	420
2	51	51×8.0	35	79.4	51.0	67.0	70	12.5	8.0	1.24	**ASR68/51X8**	**ASRG68/51X8**	420	420

[1]) Pressure shown = Item deliverable

$$\frac{\text{PN (bar)}}{10} = \text{PN (MPa)}$$

The pressures given here are the maximum allowable for the flange fittings. If the pipe or tube used has a lower pressure rating, then the welded assembly rating will be the lower one, assuming the weld is adequately strong.

See pages N16 - N20 for related flanges or flange halves depending on bolt sets.

Stainless steel parts may have dimensional deviations. Additional information on request.

*Please add the **suffixes** below according to the material/surface required.

Order code suffixes					
Material	Suffix surface and material	Example only flange adapter	Example incl. splitflanges, metr. bolts and O-ring	Example incl. splitflanges, UNC bolts and O-ring	Standard sealing material (no additional suffix needed)
Steel, oil dipped	S	ASR32/18X4.5S	ASR32/18X4.5SM	ASR32/18X4.5SU	NBR
Stainless steel	SS	ASR32/18X4.5SS	ASR32/18X4.5SSM	–	VIT

AS SAE Straight flange adapter

SAE Flange / Butt weld tube end
(ISO 6162-1/-2)

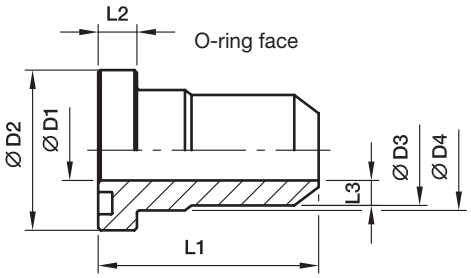

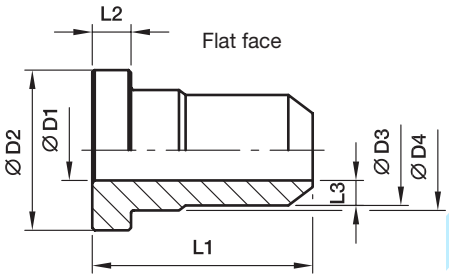

3000 PSI Series

Nom. flange size SAE (in.)	Nom. flange size ISO (DN)	Tube	D1	D2	D3	D4	L1	L2	L3	Weight (steel) kg/piece	O-ring face Order code*	Flat face Order code*	PN (bar)[1] S	PN (bar)[1] SS
1/2	13	15×2.0	11	30.2	15	23.9	45	6.8	2.0	0.09	**AS32/15X2**	**ASG32/15X2**	345	345
1/2	13	16×3.0	10	30.2	16	23.9	45	6.8	3.0	0.10	**AS32/16X3**	**ASG32/16X3**	345	345
1/2	13	21.3×2.6	13	30.2	22	23.9	45	6.8	4.5	0.12	**AS32/21.3X2.6**	**ASG32/21.3X2.6**	345	345
3/4	19	18×1.5	15	38.1	18	31.5	50	6.8	1.5	0.14	**AS33/18X1.5**	**ASG33/18X1.5**	345	345
3/4	19	22×2.0	18	38.1	22	31.5	50	6.8	2.0	0.12	**AS33/22X2**	**ASG33/22X2**	345	345
3/4	19	20×3.0	14	38.1	20	31.5	50	6.8	3.0	0.14	**AS33/20X3**	**ASG33/20X3**	345	345
3/4	19	25×4.0	17	38.1	25	31.5	50	6.8	4.0	0.17	**AS33/25X4**	**ASG33/25X4**	345	345
3/4	19	26.9×2.6	19	38.1	28	31.5	50	6.8	4.5	0.18	**AS33/26.9X2.6**	**ASG33/26.9X2.6**	345	345
1	25	20×2.5	15	44.5	20	38.0	55	8.0	2.5	0.26	**AS34/20X2.5**	**ASG34/20X2.5**	345	345
1	25	28×2.0	24	44.5	28	38.0	55	8.0	2.0	0.19	**AS34/28X2**	**ASG34/28X2**	345	345
1	25	30×4.5	21	44.5	30	38.0	55	8.0	4.5	0.26	**AS34/30X4.5**	**ASG34/30X4.5**	345	345
1	25	33.7×4.0	25	44.4	35	38.0	55	8.0	5.0	0.26	**AS34/33.7X4**	**ASG34/33.7X4**	345	345
1 1/4	32	35×2.0	31	50.8	35	43.0	60	8.0	2.0	0.31	**AS35/35X2**	**ASG35/35X2**	276	276
1 1/4	32	25×3.0	19	50.8	25	43.0	60	8.0	3.0	0.45	**AS35/25X3**	**ASG35/25X3**	276	276
1 1/4	32	30×4.0	22	50.8	30	43.0	60	8.0	4.0	0.45	**AS35/30X4**	**ASG35/30X4**	276	276
1 1/4	32	38×5.0	28	50.8	38	43.0	60	8.0	5.0	0.40	**AS35/38X5**	**ASG35/38X5**	276	276
1 1/4	32	42.4×6.0	31	50.8	43	43.0	60	8.0	6.0	0.34	**AS35/42.4X5**	**ASG35/42.4X5**	276	276
1 1/2	38	42×3.0	36	60.3	42	50.0	65	8.0	3.0	0.47	**AS36/42X3**	**ASG36/42X3**	207	207
1 1/2	38	38×4.0	30	60.3	38	50.0	65	8.0	4.0	0.57	**AS36/38X4**	**ASG36/38X4**	207	207
1 1/2	38	48.3×6.0	38	60.3	50	50.0	65	8.0	6.0	0.48	**AS36/48.3X6**	**ASG36/48.3X6**	207	207
2	51	50×6.0	38	71.4	50	62.0	70	9.5	6.0	0.96	**AS38/50X6**	**ASG38/50X6**	207	207
2	51	65×8.0	49	71.4	65	62.0	70	9.5	8.0	0.64	**AS38/65X8**	**ASG38/65X8**	207	207
2	51	60.3×7.5	47	71.4	62	62.0	70	9.5	7.5	0.78	**AS38/62X7.5**	**ASG38/62X7.5**	207	207
2 1/2	64	76.1×5.5	63	84.1	74	74.0	75	9.5	5.5	0.80	**AS310/74X5.5**	**ASG310/74X5.5**	172	172
3	76	88.9×10.0	70	101.6	90	90.0	85	9.5	10.0	1.78	**AS312/90X10**	**ASG312/90X10**	138	138
3 1/2	89	101.6×7.0	88	114.3	102	102.0	90	11.2	7.0	1.65	**AS314/102X7**	**ASG314/102X7**	34	34
4	102	114×8.0	98	127.0	114	114.0	100	11.2	8.0	2.34	**AS316/115X8.5**	**ASG316/115X8.5**	34	34
5	127	139.7×10.0	120	152.4	140	140.0	100	11.2	10.0	3.61	**AS320/140X10**	**ASG320/140X10**	34	34

[1]) Pressure shown = Item deliverable

$$\frac{\text{PN (bar)}}{10} = \text{PN (MPa)}$$

The pressures given here are the maximum allowable for the flange fittings. If the pipe or tube used has a lower pressure rating, then the welded assembly rating will be the lower one, assuming the weld is adequately strong.

See pages N16 - N20 for related flanges or flange halves depending on bolt sets.

Stainless steel parts may have dimensional deviations. Additional information on request.

*Please add the **suffixes** below according to the material/surface required.

Order code suffixes					
Material	Suffix surface and material	Example only flange adapter	Example incl. splitflanges, metr. bolts and O-ring	Example incl. splitflanges, UNC bolts and O-ring	Standard sealing material (no additional suffix needed)
Steel, oil dipped	S	AS32/15X2S	AS32/15X2SM	AS32/15X2SU	NBR
Stainless steel	SS	AS32/15X2SS	AS32/15X2SSM	–	VIT

AS SAE Straight flange adapter

SAE Flange / Butt weld tube end
(ISO 6162-1/-2)

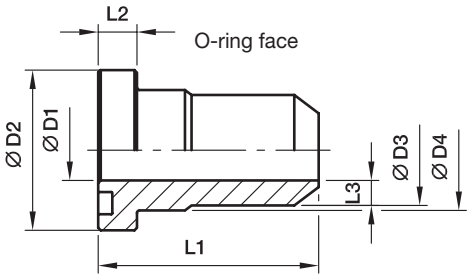

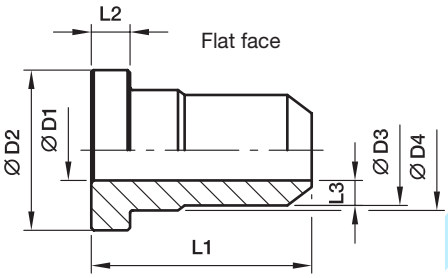

6000 PSI Series

Nom. flange size SAE (in.)	Nom. flange size ISO (DN)	Tube	D1	D2	D3	D4	L1	L2	L3	Weight (steel) kg/piece	O-ring face Order code*	Flat face Order code*	PN (bar)[1] S	PN (bar)[1] SS
1/2	13	16×3.0	10	31.8	16	24.0	45	7.8	3.0	0.12	**AS62/16X3**	**ASG62/16X3**	420	420
1/2	13	21.3×3.2	13	31.8	22	24.0	45	7.8	4.5	0.12	**AS62/21.3X3.2**	**ASG62/21.3X3.2**	420	420
3/4	19	16×3.0	10	41.3	16	31.8	50	8.8	3.0	0.20	**AS63/16X3**	**ASG63/16X3**	420	420
3/4	19	20×4.0	12	41.3	20	31.8	50	8.8	4.0	0.19	**AS63/20X4**	**ASG63/20X4**	420	420
3/4	19	26.9×4.0	18	41.3	28	32.0	50	8.8	5.0	0.21	**AS63/26.9X4**	**ASG63/26.9X4**	420	420
3/4	19	25×5.0	15	41.3	25	31.8	50	8.8	5.0	0.21	**AS63/25X5**	**ASG63/25X5**	420	420
1	25	25×5.0	15	47.6	25	38.0	55	9.5	5.0	0.30	**AS64/25X5**	**ASG64/25X5**	420	420
1	25	30×4.0	22	47.6	30	38.0	55	9.5	4.0	0.27	**AS64/30X4**	**ASG64/30X4**	420	420
1	25	30×6.0	18	47.3	30	38.0	67	9.5	6.0	0.33	**AS64/30X6**	**ASG64/30X6**	420	420
1	25	33.7×6.3	22	47.6	35	38.0	55	9.5	6.5	0.32	**AS64/33.7X6.3**	**ASG64/33.7X6.3**	420	420
1 1/4	32	30×4.0	22	54.0	30	44.0	60	10.3	4.0	0.48	**AS65/30X4**	**ASG65/30X4**	420	420
1 1/4	32	30×6.0	18	54.0	30	44.0	60	10.3	6.0	0.54	**AS65/30X6**	**ASG65/30X6**	420	420
1 1/4	32	38×5.0	28	54.0	38	44.0	60	10.3	5.0	0.45	**AS65/38X5**	**ASG65/38X5**	420	420
1 1/4	32	38×8.0	22	54.0	38	44.0	60	10.3	8.0	0.54	**AS65/38X8**	**ASG65/38X8**	420	420
1 1/4	32	42.4×6.3	29	54.0	44	44.0	60	10.3	7.5	0.48	**AS65/42.4X6.3**	**ASG65/42.4X6.3**	420	420
1 1/2	38	38×5.0	28	63.5	38	50.8	65	12.5	5.0	0.72	**AS66/38X5**	**ASG66/38X5**	420	420
1 1/2	38	38×8.0	22	63.5	38	50.8	65	12.5	8.0	0.85	**AS66/38X8**	**ASG66/38X8**	420	420
1 1/2	38	48.3×8.0	35	63.5	51	51.0	65	12.5	8.0	0.66	**AS66/48.3X8**	**ASG66/48.3X8**	420	420
2	51	50×9.0	32	79.4	50	66.6	70	12.5	9.0	1.24	**AS68/50X9**	**ASG68/50X9**	420	420
2	51	65×8.0	49	79.4	65	66.6	70	12.5	8.0	0.98	**AS68/65X8**	**ASG68/65X8**	420	420
2	51	60.3×10.0	43	79.4	61	67.0	70	12.5	9.0	1.12	**AS68/60.3X10**	**ASG68/60.3X10**	420	420
2 1/2	64	73×14.0	45	107.8	74	88.9	90	20.6	14.5	3.38	**AS610/73X14**	**ASG610/73X14**	420	420
3	76	88.6×16.0	58	131.7	90	113.8	110	25.6	16.0	6.70	**AS612/88.6X16**	**ASG612/88.6X16**	420	420

[1]) Pressure shown = Item deliverable

$\frac{\text{PN (bar)}}{10}$ = PN (MPa)

The pressures given here are the maximum allowable for the flange fittings. If the pipe or tube used has a lower pressure rating, then the welded assembly rating will be the lower one, assuming the weld is adequately strong.

See pages N16 - N20 for related flanges or flange halves depending on bolt sets.

Stainless steel parts may have dimensional deviations. Additional information on request.

*Please add the **suffixes** below according to the material/surface required.

Order code suffixes					
Material	Suffix surface and material	Example only flange adapter	Example incl. splitflanges, metr. bolts and O-ring	Example incl. splitflanges, UNC bolts and O-ring	Standard sealing material (no additional suffix needed)
Steel, oil dipped	S	AS62/16X3S	AS62/16X3SM	AS62/16X3SU	NBR
Stainless steel	SS	AS62/16X3SS	AS62/16X3SSM	–	VIT

ASL SAE Straight flange adapter

SAE Flange / Butt weld tube end
(ISO 6162-1/-2)

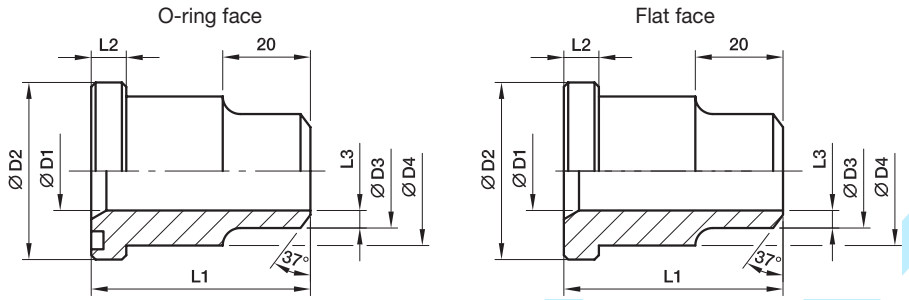

3000 PSI Series

Nom. flange size SAE (in.)	ISO (DN)	Tube	D1	D2	D3	D4	L1	L2	L3	Weight (steel) kg/piece	O-ring face Order code*	Flat face Order code*	PN (bar)[1] S	SS
1/2	13	16×2.0	12	30.2	16	23.9	41	6.7	2.5	0.26	**ASL32/16X2**	**ASLG32/16X2**	210	210
3/4	19	25×3.0	19	38.1	25	31.7	50	6.7	3.0	0.45	**ASL33/25X3**	**ASLG33/25X3**	210	210
1	25	30×4.0	22	44.4	30	38.0	50	8.0	4.0	0.25	**ASL34/30X4**	**ASLG34/30X4**	210	210
1 1/4	32	38×5.0	28	50.8	38	43.0	55	8.0	5.0	0.36	**ASL35/38X5**	**ASLG35/38X5**	210	210
1 1/2	38	45×5.0	35	60.3	45	50.0	57	8.0	5.0	0.45	**ASL36/45X5**	**ASLG36/45X5**	210	210
2	51	60×7.0	45	71.4	60	62.0	57	9.5	7.5	0.65	**ASL38/60X7**	**ASLG38/60X7**	210	210
2 1/2	64	70×7.5	55	84.1	70	74.0	58	9.5	7.5	0.89	**ASL310/70X7.5**	**ASLG310/70X7.5**	175	175
3	76	80×6.0	68	101.6	80	90.0	60	9.5	6.0	1.18	**ASL312/80X6**	**ASLG312/80X6**	138	138
3 1/2	89	100×6.0	88	114.3	100	102.0	60	11.2	6.0	1.10	**ASL314/100X6**	**ASLG314/100X6**	35	35
4	102	110×6.0	98	127.0	110	114.0	60	11.2	6.0	1.43	**ASL316/110X6**	**ASLG316/110X6**	35	35
5	127	133×6.5	120	152.4	133	140.0	60	11.2	6.5	2.22	**ASL320/133X6.5**	**ASLG320/133X6.5**	35	35

6000 PSI Series

1/2	13	16×2.0	12	31.8	17	24.0	34	7.7	2.0	0.09	**ASL62/16X2**	**ASLG62/16X2**	420	420
3/4	19	25×3.5	18	41.3	25	32.0	38	8.7	3.5	0.16	**ASL63/25X3.5**	**ASLG63/25X3.5**	420	420
1	25	30×4.0	22	47.6	30	38.5	40	9.5	4.0	0.22	**ASL64/30X4**	**ASLG64/30X4**	420	420
1 1/4	32	38×5.5	27	54.0	38	44.0	45	10.3	5.5	0.35	**ASL65/38X5.5**	**ASLG65/38X5.5**	420	420
1 1/2	38	45×6.5	32	63.5	45	51.0	50	12.5	6.5	0.53	**ASL66/45X6.5**	**ASLG66/45X6.5**	420	420
2	51	60×7.5	45	79.4	60	67.0	58	12.5	7.5	0.91	**ASL68/60X7.5**	**ASLG68/60X7.5**	420	420
2 1/2	64	74×14.5	45	107.8	74	88.9	90	20.6	14.5	3.45	**ASL610/74X14.5**	**ASLG610/74X14.5**	420	420
3	76	90×16.0	58	131.7	90	113.8	110	25.6	16.0	9.62	**ASL612/90X16**	**ASLG612/90X16**	420	420

[41]) Pressure shown = Item deliverable

$\frac{\text{PN (bar)}}{10}$ = PN (MPa)

The pressures given here are the maximum allowable for the flange fittings. If the pipe or tube used has a lower pressure rating, then the welded assembly rating will be the lower one, assuming the weld is adequately strong.

See pages N16 - N20 for related flanges or flange halves depending on bolt sets.

Stainless steel parts may have dimensional deviations. Additional information on request.

*Please add the **suffixes** below according to the material/surface required.

Order code suffixes					
Material	Suffix surface and material	Example only flange adapter	Example incl. splitflanges, metr. bolts and O-ring	Example incl. splitflanges, UNC bolts and O-ring	Standard sealing material (no additional suffix needed)
Steel, oil dipped	S	ASL32/16X2S	ASL32/16X2SM	ASL32/16X2SU	NBR
Stainless steel	SS	ASL32/16X2SS	ASL32/16X2SSM	–	VIT

WAS SAE 90° Elbow flange adapter

SAE Flange / Butt weld tube end
(ISO 6162-1/-2)

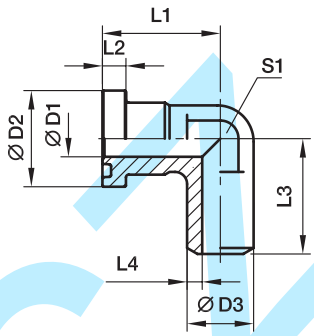

3000 PSI Series

Nom. flange size SAE (in.)	Nom. flange size ISO (DN)	max.	D1	D2	D3	L1	L2	L3	L4	S1	Weight (steel) kg/piece	Order code*	PN (bar)[1] S	PN (bar)[1] SS
1/2	13	21.3	13	30.2	21.6	44	6.7	50	4.3	22	0.22	**WAS32/21.6**	345	345
3/4	19	26.9	19	38.1	27.2	53	6.7	64	4.1	27	0.35	**WAS33/27.2**	345	345
1	25	33.7	25	44.4	34.5	60	8.0	65	4.7	34	0.52	**WAS34/34.5**	345	345
1 1/4	32	42.4	30	50.8	42.8	55	8.0	64	6.4	42	0.78	**WAS35/42.8**	276	276
1 1/2	38	48.3	38	60.3	48.6	66	8.0	78	5.3	50	1.04	**WAS36/48.6**	207	207

6000 PSI Series

1/2	13	21.3	13	31.8	21.6	44	7.7	50	4.3	22	0.35	**WAS62/21.6**	420	420
3/4	19	26.9	18	41.3	27.2	53	8.7	64	4.6	27	0.41	**WAS63/27.2**	420	420
1	25	33.7	22	47.6	34.5	60	9.5	62	6.3	34	0.64	**WAS64/34.5**	420	420
1 1/4	32	42.4	28	54.0	42.8	70	10.3	72	7.4	42	1.05	**WAS65/42.8**	420	420
1 1/2	38	48.3	32	63.5	48.6	80	12.5	84	8.3	50	1.58	**WAS66/48.6**	420	420

[1]) Pressure shown = Item deliverable

$\frac{\text{PN (bar)}}{10}$ = PN (MPa)

The pressures given here are the maximum allowable for the flange fittings. If the pipe or tube used has a lower pressure rating, then the welded assembly rating will be the lower one, assuming the weld is adequately strong.

See pages N16 - N20 for related flanges or flange halves depending on bolt sets.

Stainless steel parts may have dimensional deviations. Additional information on request.

*Please add the **suffixes** below according to the material/surface required.

Order code suffixes					
Material	Suffix surface and material	Example only flange adapter	Example incl. splitflanges, metr. bolt and O-ring	Example incl. splitflanges, UNC bolt and O-ring	Standard sealing material (no additional suffix needed)
Steel, oil dipped	S	WAS32/21.6S	WAS32/21.6SM	WAS32/21.6SU	NBR
Stainless steel	SS	WAS32/21.6SS	WAS32/21.6SSM	–	VIT

kovaz.si

ES SAE Straight flange adapter

SAE Flange / Socket weld tube end
(ISO 6162-1/-2)

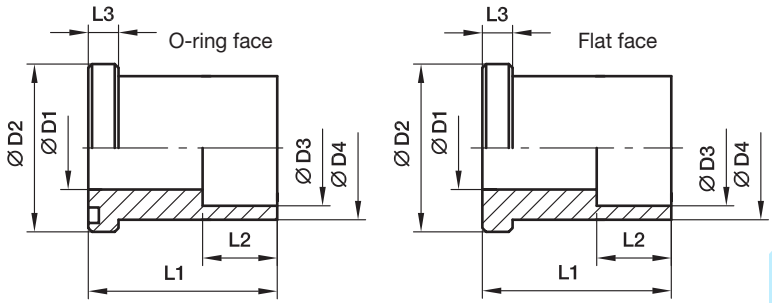

3000 PSI Series

Nom. flange size SAE (in.)	Nom. flange size ISO (DN)	max.	D1	D2	D3	D4	L1	L2	L3	Weight (steel) kg/piece	O-ring face Order code*	Flat face Order code*	PN (bar)[1] S	PN (bar)[1] SS
1/2	13	16.0	12.5	30.2	16.5	24.0	35	12	6.7	0.11	**ES32/16.5**	**ESG32/16.5**	345	345
1/2	13	17.3	12.5	30.2	17.6	24.0	35	12	6.7	0.12	**ES32/17.6**	**ESG32/17.6**	345	345
3/4	19	20.0	15.0	38.1	20.5	31.5	40	13	6.7	0.20	**ES33/20.5**	**ESG33/20.5**	345	345
3/4	19	21.3	15.0	38.1	21.7	31.5	40	13	6.7	0.20	**ES33/21.7**	**ESG33/21.7**	345	345
1	25	25.0	20.0	44.4	25.5	38.0	45	14	8.0	0.30	**ES34/25.5**	**ESG34/25.5**	345	345
1	25	26.9	20.0	44.4	27.3	38.0	45	14	8.0	0.28	**ES34/27.3**	**ESG34/27.3**	345	345
1 1/4	32	30.0	25.0	50.8	30.5	43.0	50	16	8.0	0.39	**ES35/30.5**	**ESG35/30.5**	276	276
1 1/4	32	32.0	25.0	50.8	32.5	43.0	50	16	8.0	0.37	**ES35/32.5**	**ESG35/32.5**	276	276
1 1/4	32	33.7	25.0	50.8	34.2	43.0	50	16	8.0	0.35	**ES35/34.2**	**ESG35/34.2**	276	276
1 1/2	38	38.0	32.0	60.3	38.5	50.0	55	18	8.0	0.52	**ES36/38.5**	**ESG36/38.5**	207	207
1 1/2	38	40.0	32.0	60.3	40.7	50.0	55	18	8.0	0.49	**ES36/40.7**	**ESG36/40.7**	207	207
1 1/2	38	42.4	32.0	60.3	43.0	50.0	55	18	8.0	0.47	**ES36/43**	**ESG36/43**	207	207
2	51	48.3	32.0	71.4	49.0	62.0	65	20	9.5	0.95	**ES38/49**	**ESG38/49**	207	207
2	51	50.0	38.0	71.4	50.7	62.0	65	20	9.5	0.87	**ES38/50.7**	**ESG38/50.7**	207	207
2 1/2	64	60.3	38.0	84.1	61.0	74.0	75	22	9.5	1.46	**ES310/61**	**ESG310/61**	172	172
2 1/2	64	63.5	47.0	84.1	64.0	74.0	75	22	9.5	1.37	**ES310/64**	**ESG310/64**	172	172
3	76	73.5	47.0	101.6	74.0	90.0	85	24	9.5	2.30	**ES312/74**	**ESG312/74**	138	138
3	76	76.1	58.0	101.6	77.0	90.0	85	24	9.5	2.23	**ES312/77**	**ESG312/77**	138	138
3	76	80.0	58.0	101.6	81.0	90.0	85	24	9.5	2.13	**ES312/81**	**ESG312/81**	138	138

[1]) Pressure shown = Item deliverable

$\frac{\text{PN (bar)}}{10}$ = PN (MPa)

The pressures given here are the maximum allowable for the flange fittings. If the pipe or tube used has a lower pressure rating, then the welded assembly rating will be the lower one, assuming the weld is adequately strong.

See pages N16 - N20 for related flanges or flange halves depending on bolt sets.

Stainless steel parts may have dimensional deviations. Additional information on request.

*Please add the **suffixes** below according to the material/surface required.

Order code suffixes					
Material	Suffix surface and material	Example only flange adapter	Example incl. splitflanges, metr. bolts and O-ring	Example incl. splitflanges, UNC bolts and O-ring	Standard sealing material (no additional suffix needed)
Steel, oil dipped	S	ES32/16.5S	ES32/16.5SM	ES32/16.5SU	NBR
Stainless steel	SS	ES32/16.5SS	ES32/16.5SSM	–	VIT

ES SAE Straight flange adapter

SAE Flange / Socket weld tube end
(ISO 6162-1/-2)

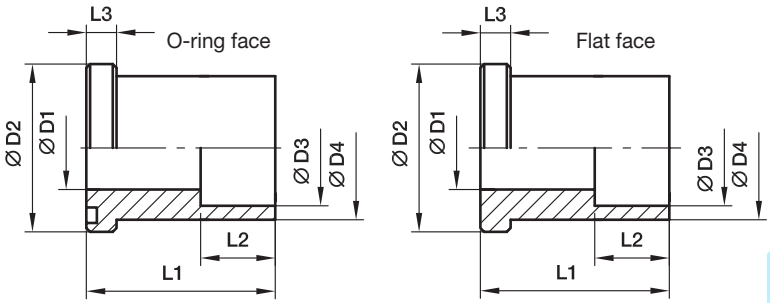

6000 PSI Series

Nom. flange size SAE (in.)	Nom. flange size ISO (DN)	max.	D1	D2	D3	D4	L1	L2	L3	Weight (steel) kg/piece	O-ring face Order code*	Flat face Order code*	PN (bar)[1] S	PN (bar)[1] SS
1/2	13	16.0	11.0	31.8	16.5	24.0	35	13	7.7	0.26	**ES62/16.5**	**ESG62/16.5**	420	420
1/2	13	17.3	11.0	31.8	17.6	24.0	35	13	7.7	0.24	**ES62/17.6**	**ESG62/17.6**	420	420
3/4	13	20.0	15.0	41.3	20.5	31.8	40	13	8.7	0.22	**ES63/20.5**	**ESG63/20.5**	420	420
3/4	19	21.3	15.0	41.3	21.7	31.8	40	13	8.7	0.19	**ES63/21.7**	**ESG63/21.7**	420	420
1	25	25.0	20.0	47.6	25.5	38.0	45	13	9.5	0.32	**ES64/25.5**	**ESG64/25.5**	420	420
1	25	26.9	20.0	47.6	27.3	38.0	45	13	9.5	0.31	**ES64/27.3**	**ESG64/27.3**	420	420
1 1/4	32	30.0	24.0	54.0	30.5	44.0	50	16	10.3	0.43	**ES65/30.5**	**ESG65/30.5**	420	420
1 1/4	32	32.0	24.0	54.0	32.5	44.0	50	16	10.3	0.43	**ES65/32.5**	**ESG65/32.5**	420	420
1 1/4	32	33.7	24.0	54.0	34.2	44.0	50	16	10.3	0.45	**ES65/34.2**	**ESG65/34.2**	420	420
1 1/2	38	38.0	31.0	63.5	38.5	51.0	55	18	12.5	0.63	**ES66/38.5**	**ESG66/38.5**	420	420
1 1/2	38	40.0	31.0	63.5	40.7	51.0	55	18	12.5	0.60	**ES66/40.7**	**ESG66/40.7**	420	420
1 1/2	38	42.4	31.0	63.5	42.8	51.0	55	18	12.5	0.57	**ES66/42.8**	**ESG66/42.8**	420	420
2	51	48.3	38.0	79.4	49.0	67.0	65	20	12.5	1.24	**ES68/49**	**ESG68/49**	420	420
2	51	50.0	38.0	79.4	50.7	67.0	65	20	12.5	1.22	**ES68/50.7**	**ESG68/50.7**	420	420

[1]) Pressure shown = Item deliverable

$\frac{\text{PN (bar)}}{10}$ = PN (MPa)

The pressures given here are the maximum allowable for the flange fittings. If the pipe or tube used has a lower pressure rating, then the welded assembly rating will be the lower one, assuming the weld is adequately strong.

See pages N16 - N20 for related flanges or flange halves depending on bolt sets.

Stainless steel parts may have dimensional deviations. Additional information on request.

*Please add the **suffixes** below according to the material/surface required.

Order code suffixes					
Material	Suffix surface and material	Example only flange adapter	Example incl. splitflanges, metr. bolts and O-ring	Example incl. splitflanges, UNC bolts and O-ring	Standard sealing material (no additional suffix needed)
Steel, oil dipped	S	ES62/16.5S	ES62/16.5SM	ES62/16.5SU	NBR
Stainless steel	SS	ES62/16.5SS	ES62/16.5SSM	–	VIT

ESL SAE Straight flange adapter

SAE Flange / Socket weld tube end
(ISO 6162-1/-2)

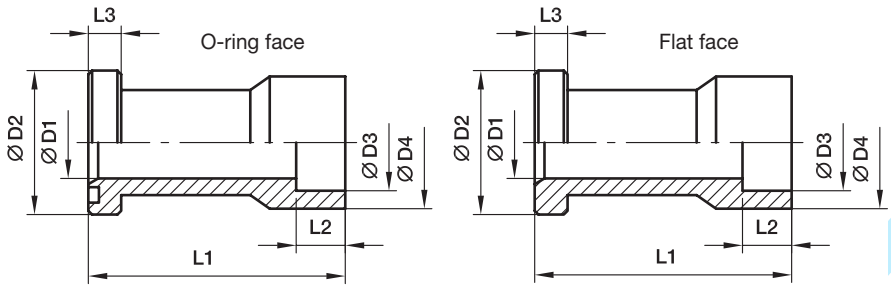

3000 PSI Series

Nom. flange size SAE (in.)	Nom. flange size ISO (DN)	max.	D1	D2	D3	D4	L1	L2	L3	Weight (steel) kg/piece	O-ring face Order code*	Flat face Order code*	PN (bar)[1] S	PN (bar)[1] SS
1/2	13	20.0	15	30.2	20.5	30	60	13	6.7	0.45	**ESL32/20.5**	**ESLG32/20.5**	345	345
1/2	13	21.3	15	30.2	21.7	30	60	13	6.7	0.44	**ESL32/21.7**	**ESLG32/21.7**	345	345
3/4	19	25.0	19	38.1	25.5	35	68	13	6.7	0.60	**ESL33/25.5**	**ESLG33/25.5**	345	345
3/4	19	26.9	19	38.1	27.3	35	68	13	6.7	0.30	**ESL33/27.3**	**ESLG33/27.3**	345	345
1	25	30.0	23	44.4	30.5	44	75	16	8.0	0.75	**ESL34/30.5**	**ESLG34/30.5**	345	345
1	25	32.0	24	44.4	32.5	44	75	16	8.0	0.72	**ESL34/32.5**	**ESLG34/32.5**	345	345
1	25	33.7	25	44.4	34.0	44	75	16	8.0	0.44	**ESL34/34**	**ESLG34/34**	345	345
1	25	35.0	25	44.4	35.5	44	75	16	8.0	0.42	**ESL34/35.5**	**ESLG34/35.5**	345	345
1 1/4	32	38.0	32	50.8	38.5	55	95	18	8.0	0.67	**ESL35/38.5**	**ESLG35/38.5**	276	276
1 1/4	32	40.0	32	50.8	40.5	55	95	18	8.0	0.95	**ESL35/40.5**	**ESLG35/40.5**	276	276
1 1/4	32	42.4	32	50.8	43.0	55	95	18	8.0	0.63	**ESL35/43**	**ESLG35/43**	276	276
1 1/2	38	48.3	38	60.3	49.0	68	100	20	8.0	0.94	**ESL36/49**	**ESLG36/49**	207	207
1 1/2	38	50.0	38	60.3	50.4	68	100	20	8.0	0.88	**ESL36/50.4**	**ESLG36/50.4**	207	207
2	51	60.3	50	71.4	61.0	79	107	22	9.5	1.34	**ESL38/61**	**ESLG38/61**	207	207
2	51	65.0	50	71.4	65.8	79	107	22	9.5	1.80	**ESL38/65.8**	**ESLG38/65.8**	207	207
2 1/2	64	73.0	58	84.1	74.0	98	130	24	9.5	2.30	**ESL310/74**	**ESLG310/74**	172	172
2 1/2	64	76.1	58	84.1	77.0	98	130	24	9.5	2.25	**ESL310/77**	**ESLG310/77**	172	172
2 1/2	64	80.0	58	84.1	81.0	98	130	24	9.5	2.15	**ESL310/81**	**ESLG310/81**	172	172
3	76	88.9	70	101.6	90.5	116	150	28	9.5	3.00	**ESL312/90.5**	**ESLG312/90.5**	138	138

6000 PSI Series

1/2	13	20.0	15	31.8	20.5	32	60	13	7.7	0.45	**ESL62/20.5**	**ESLG62/20.5**	420	420
1/2	13	21.3	15	31.8	21.7	32	60	13	7.7	0.44	**ESL62/21.7**	**ESLG62/21.7**	420	420
1/2	13	22.0	15	31.8	22.5	32	60	13	7.7	0.65	**ESL62/22.5**	**ESLG62/22.5**	420	420
3/4	19	25.0	19	41.3	25.7	40	68	13	8.7	0.38	**ESL63/25.7**	**ESLG63/25.7**	420	420
3/4	19	26.9	19	41.3	27.3	40	68	13	8.7	0.61	**ESL63/27.3**	**ESLG63/27.3**	420	420
3/4	19	28.0	19	41.3	28.7	40	68	13	8.7	0.37	**ESL63/28.7**	**ESLG63/28.7**	420	420
1	25	33.7	25	47.6	34.0	48	75	16	9.5	0.75	**ESL64/34**	**ESLG64/34**	420	420
1	25	35.0	25	47.6	35.5	48	75	16	9.5	0.73	**ESL64/35.5**	**ESLG64/35.5**	420	420

[1]) Pressure shown = Item deliverable

$\frac{\text{PN (bar)}}{10}$ = PN (MPa)

The pressures given here are the maximum allowable for the flange fittings. If the pipe or tube used has a lower pressure rating, then the welded assembly rating will be the lower one, assuming the weld is adequately strong.

See pages N16 and N19 for related flange halves depending on bolt sets.

Stainless steel parts may have dimensional deviations. Additional information on request.

*Please add the **suffixes** below according to the material/surface required.

Order code suffixes					
Material	Suffix surface and material	Example only flange adapter	Example incl. splitflanges, metr. bolts and O-ring	Example incl. splitflanges, UNC bolts and O-ring	Standard sealing material (no additional suffix needed)
Steel, oil dipped	S	ESL32/20.5S	ESL32/20.5SM	ESL32/20.5SU	NBR
Stainless steel	SS	ESL32/20.5SS	ESL32/20.5SSM	–	VIT

PFF-G SAE Straight 4 bolt flange with BSPP thread

SAE Flange (ISO 6162-1/-2) / Female BSPP thread (ISO 1179-1)

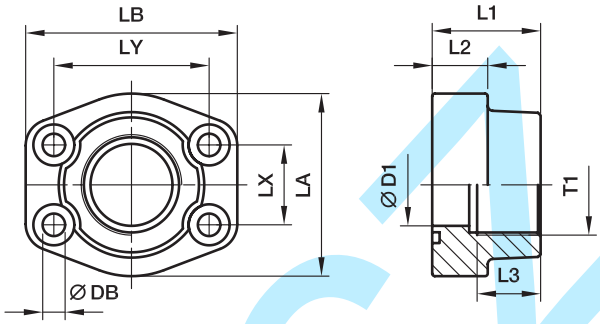

3000 PSI Series

Nom. flange size SAE (in.)	Nom. flange size ISO (DN)	T1	D1	L1	L2	L3	LA	LB	LX	LY	DB	Weight (steel) kg/piece	Order code*	PN (bar)[1] S	PN (bar)[1] SS
1/2	13	**G 3/8**	13	36	16	19.0	46	57	17.5	38.1	8.9	0.31	**PFF32G38**	345	345
1/2	13	**G 1/2**	13	36	16	19.0	46	57	17.5	38.1	8.9	0.28	**PFF32G**	345	345
3/4	19	**G 3/4**	19	36	18	19.0	50	65	22.3	47.6	10.6	0.39	**PFF33G**	345	345
3/4	19	**G 1/2**	13	36	18	19.0	50	65	22.3	47.6	10.6	0.42	**PFF33G12**	345	345
1	25	**G 1**	25	38	18	20.5	55	70	26.2	52.4	10.6	0.48	**PFF34G**	345	345
1	25	**G 3/4**	19	35	21	19.0	55	70	26.2	52.4	10.6	0.56	**PFF34G34**	345	345
1 1/4	32	**G 1 1/4**	31	41	21	22.0	68	79	30.2	58.7	10.6***	0.69	**PFF35G**	276	276
1 1/4	32	**G 1**	25	42	25	22.0	65	80	30.2	58.7	10.6***	0.82	**PFF35G1**	276	276
1 1/2	38	**G 1 1/2**	38	44	25	24.0	78	93	35.7	69.9	13.3	1.12	**PFF36G**	207	207
1 1/2	38	**G 1 1/4**	32	45	27	24.0	78	95	35.7	69.9	13.3	1.21	**PFF36G114**	207	207
2	51	**G 2**	50	45	25	26.0	89	103	42.9	77.8	13.5	1.27	**PFF38G**	207	207
2	51	**G 1 1/2**	38	45	25	26.0	89	103	42.9	77.8	13.5	1.44	**PFF38G112**	207	207
2 1/2	64	**G 2 1/2**	63	50	25	30.0	101	115	50.8	88.9	13.5	1.54	**PFF310G**	172	172
2 1/2	64	**G 2**	51	50	25	30.0	101	115	50.8	88.9	13.5	2.04	**PFF310G2**	172	172
3	76	**G 3**	73	50	27	34.0	124	135	61.9	106.4	16.7	2.28	**PFF312G**	138	138
3	76	**G 2 1/2**	63	50	27	30.0	124	135	61.9	106.4	16.7	2.57	**PFF312G212**	138	138
3 1/2	89	**G 3 1/2**	89	48	27	34.0	136	152	69.9	120.7	16.7	2.50	**PFF314G**	34	34
3 1/2	89	**G 3**	73	48	27	34.0	136	152	69.9	120.7	16.7	3.10	**PFF314G3**	34	34
4	102	**G 4**	99	48	27	34.0	146	162	77.8	130.2	16.7	2.65	**PFF316G**	34	34
4	102	**G 3 1/2**	89	48	27	34.0	146	162	77.8	130.2	16.7	3.30	**PFF316G312**	34	34
5	127	**G 5**	120	50	28	30.0	180	184	92.1	152.4	16.7	5.80	**PFF320G**	34	34

6000 PSI Series

1/2	13	**G 3/8**	13	36	16	19	46	57	18.2	40.5	9.0	0.29	**PFF62G38**	420	420
1/2	13	**G 1/2**	13	36	16	15	46	57	18.2	40.5	9.0	0.30	**PFF62G**	420	420
3/4	19	**G 3/4**	19	35	21	22	55	71	23.8	50.8	11.0	0.53	**PFF63G**	420	420
3/4	19	**G 1/2**	13	35	21	22	55	71	23.8	50.8	11.0	0.56	**PFF63G12**	420	420
1	25	**G 1**	25	44	25	20	69	82	27.8	57.2	13.0	0.83	**PFF64G**	420	420
1	25	**G 3/4**	19	42	25	24	65	81	27.8	57.2	13.0	0.94	**PFF64G34**	420	420
1 1/4	32	**G 1 1/4**	31	44	27	22	79	96	31.8	66.6	15.0**	1.16	**PFF65G**	420	420
1 1/4	32	**G 1 1/4**	32	45	27	25	78	95	31.8	66.6	13.5	1.23	**PFF65/12G**	420	420
1 1/4	32	**G 1**	25	45	27	25	78	95	31.8	66.6	15.0**	1.26	**PFF65G1**	420	420
1 1/4	32	**G 1**	25	45	27	25	78	95	31.8	66.6	13.3	1.26	**PFF65/12G1**	420	420
1 1/2	38	**G 1 1/2**	38	51	30	24	88	107	36.5	79.3	17.0	1.64	**PFF66G**	420	420
1 1/2	38	**G 1 1/4**	32	50	30	28	94	112	36.5	79.3	17.0	1.97	**PFF66G114**	420	420
2	51	**G 2**	50	70	37	33	117	136	44.5	96.8	21.0	3.31	**PFF68G**	420	420
2	51	**G 1 1/2**	38	65	37	30	114	134	44.5	96.8	21.0	3.54	**PFF68G112**	420	420
2 1/2	64	**G 2 1/2**	63	80	45	32	152	180	58.7	123.8	25.0	3.05	**PFF610G**	420	420
3	76	**G 3**	73	90	55	40	178	208	71.4	152.4	32.0	3.45	**PFF612G**	420	420

*Please add the **suffixes** below according to the material/surface required.

Order code suffixes					
Material	Suffix surface and material	Example only 4 bolt flange	Example 4 bolt flange incl. metr. bolts and O-ring	Example 4 bolt flange incl. UNC bolts and O-ring	Standard sealing material (no additional suffix needed)
Steel, zinc plated, Cr(VI)-free	CF	PFF32G38CF	PFF32G38CFM	PFF32G38CFU	NBR
Stainless steel	SS	PFF32G38SS	PFF32G38SSM	–	VIT

**DB = 13.3 for UNC Bolts

*** = 12 for UNC Bolts

[1]) Pressure shown = Item deliverable

$$\frac{\text{PN (bar)}}{10} = \text{PN (MPa)}$$

Stainless steel parts may have dimensional deviations. Additional information on request.

PCFF-G SAE Straight 4 bolt flange with BSPP thread

SAE Counter flange / Female BSPP thread
(ISO 6162-1/-2) (ISO 1179-1)

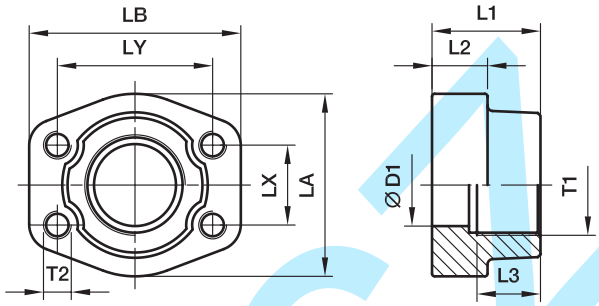

3000 PSI Series

Nom. flange size SAE (in.)	Nom. flange size ISO (DN)	T1	D1	L1	L2	L3	LA	LB	LX	LY	T2 (metr.)	T2 (unc.)	Weight (steel) kg/piece	Order code*	PN (bar)[1] S	PN (bar)[1] SS
1/2	13	**G 3/8**	13	36	16	15.0	46	57	17.5	38.1	M 8	5/16	0.33	**PCFF32G38**	345	345
1/2	13	**G 1/2**	13	36	16	13.0	46	57	17.5	38.1	M 8	5/16	0.29	**PCFF32G**	345	345
3/4	19	**G 3/4**	19	36	18	19.0	50	65	22.3	47.6	M10	3/8	0.34	**PCFF33G**	345	345
3/4	19	**G 1/2**	13	36	18	19.0	50	65	22.3	47.6	M10	3/8	0.42	**PCFF33G12**	345	345
1	25	**G 1**	25	38	18	20.5	55	70	26.2	52.4	M10	3/8	0.47	**PCFF34G**	345	345
1	25	**G 3/4**	19	35	21	19.0	55	70	26.2	52.4	M10	3/8	0.56	**PCFF34G34**	345	345
1 1/4	32	**G 1 1/4**	32	40	21	22.0	68	79	30.2	58.7	M10	7/16	0.68	**PCFF35G**	276	276
1 1/4	32	**G 1**	25	42	25	22.0	65	80	30.2	58.7	M10	7/16	0.84	**PCFF35G1**	276	276
1 1/2	38	**G 1 1/2**	38	45	25	24.0	78	93	35.7	69.9	M12	1/2	1.12	**PCFF36G**	207	207
1 1/2	38	**G 1 1/4**	32	45	27	22.0	78	95	35.7	69.9	M12	1/2	1.22	**PCFF36G114**	207	207
2	51	**G 2**	51	45	26	26.0	89	103	42.9	77.8	M12	1/2	1.24	**PCFF38G**	207	207
2	51	**G 1 1/2**	38	45	25	24.0	89	103	42.9	77.8	M12	1/2	1.59	**PCFF38G112**	207	207
2 1/2	64	**G 2 1/2**	63	50	25	30.0	101	115	50.8	88.9	M12	1/2	1.66	**PCFF310G**	172	172
2 1/2	64	**G 2**	51	50	25	30.0	101	115	50.8	88.9	M12	1/2	2.09	**PCFF310G2**	172	172
3	76	**G 3**	73	50	27	30.0	124	135	61.9	106.4	M16	5/8	2.37	**PCFF312G**	138	138
3	76	**G 2 1/2**	63	50	27	30.0	124	135	61.9	106.4	M16	5/8	2.65	**PCFF312G212**	138	138
3 1/2	89	**G 3 1/2**	89	50	27	30.0	136	152	69.9	120.7	M16	5/8	2.51	**PCFF314G**	34	34
3 1/2	89	**G 3**	73	48	27	34.0	136	152	69.9	120.7	M16	5/8	3.37	**PCFF314G3**	34	34
4	102	**G 4**	99	50	27	30.0	146	162	77.8	130.2	M16	5/8	2.87	**PCFF316G**	34	34
4	102	**G 3 1/2**	89	48	27	34.0	146	162	77.8	130.2	M16	5/8	3.39	**PCFF316G312**	34	34
5	127	**G 5**	120	50	28	30.0	180	184	92.1	152.4	M16	5/8	5.80	**PCFF320G**	34	34

6000 PSI Series

1/2	13	**G 3/8**	13	36	16	13.0	46	57	18.2	40.5	M 8	5/16	0.33	**PCFF62G38**	420	420
1/2	13	**G 1/2**	13	36	16	19.0	46	57	18.2	40.5	M 8	5/16	0.29	**PCFF62G**	420	420
3/4	19	**G 3/4**	19	35	21	22.0	55	71	23.8	50.8	M10	3/8	0.58	**PCFF63G**	420	420
3/4	19	**G 1/2**	13	35	21	19.0	55	71	23.8	50.8	M10	3/8	0.58	**PCFF63G12**	420	420
1	25	**G 1**	25	42	25	24.0	65	81	27.8	57.2	M12	7/16	0.82	**PCFF64G**	420	420
1	25	**G 3/4**	19	42	25	22.0	65	81	27.8	57.2	M12	7/16	0.88	**PCFF64G34**	420	420
1 1/4	32	**G 1 1/4**	32	45	27	25.0	78	95	31.8	66.6	M14	1/2	1.18	**PCFF65G**	420	420
1 1/4	32	**G 1 1/4**	32	45	27	25.0	78	95	31.8	66.6	M12	–	1.18	**PCFF65/12G**	420	420
1 1/4	32	**G 1**	25	45	27	24.0	78	95	31.8	66.6	M14	1/2	1.24	**PCFF65G1**	420	420
1 1/4	32	**G 1**	25	45	27	24.0	78	95	31.8	66.6	M12	–	1.24	**PCFF65/12G1**	420	420
1 1/2	38	**G 1 1/2**	38	50	30	28.0	94	112	36.5	79.3	M16	5/8	1.90	**PCFF66G**	420	420
1 1/2	38	**G 1 1/4**	32	50	30	25.0	94	112	36.5	79.3	M16	5/8	2.03	**PCFF66G114**	420	420
2	51	**G 2**	50	70	37	33.0	116	135	44.5	96.8	M20	3/4	3.68	**PCFF68G**	420	420
2	51	**G 1 1/2**	38	65	37	28.0	114	134	44.5	96.8	M20	3/4	3.86	**PCFF68G112**	420	420
2 1/2	64	**G 2 1/2**	63	80	45	32.0	152	180	58.7	123.8	M24	–	6.98	**PCFF610G**	420	420
3	76	**G 3**	73	90	55	40.0	178	208	71.4	152.4	M30	–	13.00	**PCFF612G**	420	420

*Please add the **suffixes** below according to the material/surface required.

[1]) Pressure shown = Item deliverable

$$\frac{\text{PN (bar)}}{10} = \text{PN (MPa)}$$

Stainless steel parts may have dimensional deviations. Additional information on request.

Order code suffixes				
Material	Suffix surface and material	Example 4 bolt flange with metr. threads	Example 4 bolt flange with UNC threads	Standard sealing material (no additional suffix needed)
Steel, zinc plated, Cr(VI)-free	CF	PCFF32G38CFM	PCFF32G38CFU	NBR
Stainless steel	SS	PCFF32G38SSM	PCFF32G38SSU	VIT

N

PAFSF-G SAE Straight 4 bolt flange flat with BSPP thread

SAE Flange / Female BSPP thread
(ISO 6162-1/-2) (ISO 1179-1)

only for low pressure applications

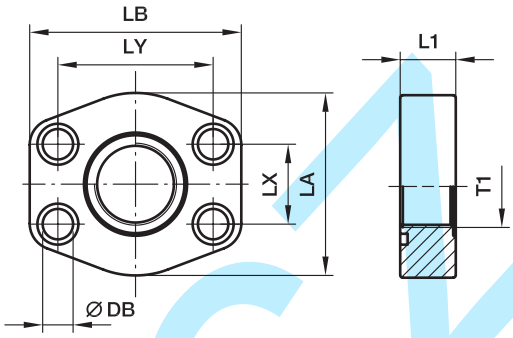

3000 PSI Series

Nom. flange size SAE (in.)	Nom. flange size ISO (DN)	T1	L1	LA	LB	LX	LY	DB	Bolts (metr.)	Bolts (unc.)	O-ring	Weight (steel) kg/piece	Order code*	PN (bar)[1] S	PN (bar)[1] SS
1/2	13	**G 3/8**	16	46	58	17.5	38.1	8.9	M 08×30	5/16×1 1/4	**Standard**	0.20	**PAFSF080G38**	40	40
1/2	13	**G 1/2**	16	46	58	17.5	38.1	8.9	M 08×30	5/16×1 1/4	**OR25.07x2.62X**	0.27	**PAFSF080G**	40	40
3/4	19	**G 1/2**	18	49	66	22.3	47.6	10.6	M 10×35	3/8×1 1/2	**Standard**	0.29	**PAFSF100G12**	40	40
3/4	19	**G 3/4**	18	49	66	22.3	47.6	10.6	M 10×35	3/8×1 1/2	**OR31.34X3.53X**	0.27	**PAFSF100G**	40	40
1	25	**G 3/4**	19	53	71	26.2	52.4	10.6	M 10×35	3/8×1 1/2	**Standard**	0.37	**PAFSF102G34**	40	40
1	25	**G 1**	19	53	71	26.2	52.4	10.6	M 10×35	3/8×1 1/2	**OR37.7X3.53X**	0.32	**PAFSF102G**	40	40
1 1/4	32	**G 1**	21	69	80	30.2	58.7	10.6***	M 10×35	7/16×1 1/2	**Standard**	0.57	**PAFSF104G1**	40	40
1 1/4	32	**G 1 1/4**	21	69	80	30.2	58.7	10.6***	M 10×35	7/16×1 1/2	**OR44.45X3.53X**	0.62	**PAFSF104G**	40	40
1 1/2	38	**G 1 1/4**	24	77	95	35.7	69.9	13.3	M 12×45	1/2×1 3/4	**Standard**	0.83	**PAFSF106G114**	40	40
1 1/2	38	**G 1 1/2**	24	77	95	35.7	69.9	13.3	M 12×45	1/2×1 3/4	**OR52.39X3.53X**	0.79	**PAFSF106G**	40	40
2	51	**G 1 1/2**	24	89	103	42.9	77.8	13.5	M 12×45	1/2×1 3/4	**Standard**	1.00	**PAFSF108G112**	40	40
2	51	**G 2**	24	89	103	42.9	77.8	13.5	M 12×45	1/2×1 3/4	**OR65.09X3.53X**	0.90	**PAFSF108G**	40	40
2 1/2	64	**G 2**	25	101	116	50.8	88.9	13.5	M 12×45	1/2×1 3/4	**Standard**	1.30	**PAFSF110G2**	40	40
2 1/2	64	**G 2 1/2**	25	101	116	50.8	88.9	13.5	M 12×45	1/2×1 3/4	**OR78.97X3.53X**	1.25	**PAFSF110G**	40	40
3	76	**G 2 1/2**	25	124	136	61.9	106.4	16.7	M 16×55	5/8×2 1/4	**Standard**	1.86	**PAFSF112G212**	30	30
3	76	**G 3**	25	124	136	61.9	106.4	16.7	M 16×55	5/8×2 1/4	**OR94.84X3.53X**	1.49	**PAFSF112G**	30	30
3 1/2	89	**G 3**	25	136	152	69.9	120.7	16.7	M 16×55	5/8×2 1/4	**Standard**	1.68	**PAFSF114G3**	30	30
3 1/2	89	**G 3 1/2**	25	136	152	69.9	120.7	16.7	M 16×55	5/8×2 1/4	**OR107.5X3.53X**	1.59	**PAFSF114G**	30	30
4	102	**G 3 1/2**	25	146	162	77.8	130.2	16.7	M 16×55	5/8×2 1/4	**Standard**	2.35	**PAFSF116G312**	30	30
4	102	**G 4**	25	146	162	77.8	130.2	16.7	M 16×55	5/8×2 1/4	**OR117.1X3.53X**	2.25	**PAFSF116G**	30	30
5	127	**G 4**	25	180	184	92.1	152.4	16.7	M 16×55	5/8×2 1/4	**Standard**	3.45	**PAFSF118G4**	30	30
5	127	**G 5**	25	180	184	92.1	152.4	16.7	M 16×55	5/8×2 1/4	**OR145.6X3.53X**	3.15	**PAFSF118G**	30	30

6000 PSI Series

1/2	13	**G 3/8**	16	46	58	18.2	40.5	8.9	M 08×30	5/16×1 1/4	**Standard**	0.25	**PAFSF401G38**	40	40
1/2	13	**G 1/2**	16	46	58	18.2	40.5	8.9	M 08×30	5/16×1 1/4	**OR25.07X2.62X**	0.20	**PAFSF401G**	40	40
3/4	19	**G 1/2**	19	53	71	23.8	50.8	10.6	M 10×35	3/8×1 1/2	**Standard**	0.37	**PAFSF402G12**	40	40
3/4	19	**G 3/4**	19	60	71	23.8	50.8	10.6	M 10×35	3/8×1 1/2	**OR32.92X3.53X**	0.36	**PAFSF402G**	40	40
1	25	**G 3/4**	24	66	80	27.8	57.2	13.3***	M 12×45	7/16×1 1/2	**Standard**	0.64	**PAFSF403G34**	40	40
1	25	**G 1**	24	66	80	27.8	57.2	13.3***	M 12×45	7/16×1 1/2	**OR37.7X3.53X**	0.60	**PAFSF403G**	40	40
1 1/4	32	**G 1**	27	77	94	31.8	66.6	15.0**	M 14×50	1/2×1 3/4	**Standard**	0.88	**PAFSF404G1**	40	40
1 1/4	32	**G 1**	27	77	94	31.8	66.6	13.3	M 12×50	–	**Standard**	0.88	**PAFSF404/12G1**	40	40
1 1/4	32	**G 1 1/4**	27	77	94	31.8	66.6	15.0**	M 14×50	1/2×1 3/4	**OR44.45X3.53X**	0.87	**PAFSF404G**	40	40
1 1/4	32	**G 1 1/4**	27	77	94	31.8	66.6	13.3	M 12×50	–	**OR44.45X3.53X**	0.87	**PAFSF404/12G**	40	40
1 1/2	38	**G 1 1/4**	30	89	103	36.5	79.3	16.7	M 16×55	5/8×2 1/4	**Standard**	1.14	**PAFSF405G114**	40	40
1 1/2	38	**G 1 1/2**	30	89	103	36.5	79.3	16.7	M 16×55	5/8×2 1/4	**OR52.39X3.53X**	1.01	**PAFSF405G**	40	40
2	51	**G 1 1/2**	35	123	135	44.5	96.8	20.6	M 20×70	3/4×2 3/4	**Standard**	2.94	**PAFSF406G112**	40	40
2	51	**G 2**	35	123	135	44.5	96.8	20.6	M 20×70	3/4×2 3/4	**OR65.09X3.53X**	2.84	**PAFSF406G**	40	40

*Please add the **suffixes** below according to the material/surface required.

Order code suffixes					
Material	Suffix surface and material	Example only 4 bolt flange	Example 4 bolt flange incl. metr. bolts and O-ring	Example 4 bolt flange incl. UNC bolts and O-ring	Standard sealing material (no additional suffix needed)
Steel, zinc plated, Cr(VI)-free	CF	PAFSF080GCF	PAFSF080GCFM	PAFSF080GCFU	NBR
Stainless steel	SS	PAFSF080GSS	PAFSF080GSSM	–	VIT

** DB = 13.3 for UNC Bolts
*** = 12 for UNC Bolts
[1]) Pressure shown = Item deliverable

$$\frac{\text{PN (bar)}}{10} = \text{PN (MPa)}$$

Stainless steel parts may have dimensional deviations. Additional information on request.

PEFF-G SAE 90° 4 bolt flange with BSPP thread

SAE 90° Flange / Female BSPP thread
(ISO 6162-1/-2) (ISO 1179-1)

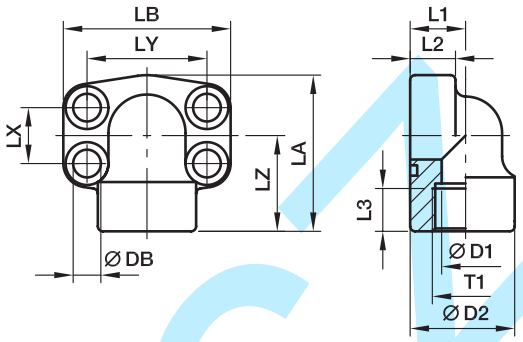

3000 PSI Series

Nom. flange size SAE (in.)	Nom. flange size ISO (DN)	T1	D1	D2	L1	L2	L3	LA	LB	LX	LY	LZ	DB	Bolt (metr.)	Bolt (unc.)	Weight (steel) kg/piece	Order code*	PN (bar)[1] S	PN (bar)[1] SS
1/2	13	**G 1/2**	13	34.0	18	16	16	59	57	17.5	38.1	36	8.9	M 08×30	5/16×1 1/4	0.33	**PEFF32G**	348	348
3/4	19	**G 3/4**	19	38.5	22	18	19	63	68	22.3	47.6	38	10.6	M 10×35	3/8×1 1/2	0.52	**PEFF33G**	348	348
1	25	**G 1**	25	44.5	28	19	19	68	72	26.2	52.4	41	10.6	M 10×35	3/8×1 1/2	0.64	**PEFF34G**	348	348
1 1/4	32	**G 1 1/4**	31	53.5	30	22	22	84	81	30.2	58.7	50	10.6***	M 10×35	7/16×1 1/2	0.99	**PEFF35G**	278	278
1 1/2	38	**G 1 1/2**	38	62.5	36	25	24	97	93	35.7	69.9	58	13.3	M 12×45	1/2×1 3/4	1.42	**PEFF36G**	210	210
2	51	**G 2**	50	77.0	41	25	26	109	105	42.9	77.8	65	13.5	M 12×45	1/2×1 3/4	2.00	**PEFF38G**	210	210
2 1/2	64	**G 2 1/2**	60	89.0	50	25	30	127	115	50.8	88.9	77	13.5	M 12×45	1/2×1 3/4	2.90	**PEFF310G**	175	175

6000 PSI Series

1/2	13	**G 1/2**	13	34.0	18	16	16	59	57	18.2	40.5	36	8.9	M 08×30	5/16×1 1/4	0.33	**PEFF62G**	420	420
3/4	19	**G 3/4**	19	44.5	28	20	22	68	72	23.8	50.8	41	10.6	M 10×35	3/8×1 1/2	0.80	**PEFF63G**	420	420
1	25	**G 1**	25	53.5	30	24	24	84	82	27.8	57.2	50	13.3***	M 12×45	7/16×1 1/2	1.16	**PEFF64G**	420	420
1 1/4	32	**G 1 1/4**	31	62.5	36	25	25	97	95	31.8	66.6	58	15.0**	M 14×50	1/2×1 3/4	1.66	**PEFF65G**	420	420
1 1/4	32	**G 1 1/4**	31	62.5	36	25	25	97	95	31.8	66.6	58	13.3	M 12×50	–	1.66	**PEFF65/12G**	420	420
1 1/2	38	**G 1 1/2**	38	62.0	41	26	23	109	105	36.5	79.3	65	16.7	M 16×55	5/8×2 1/4	2.24	**PEFF66G**	420	420
2	51	**G 2**	50	87.0	45	35	34	133	134	44.5	96.8	75	20.6	M 20×70	3/4×2 3/4	3.85	**PEFF68G**	420	420

** DB = 13.3 for UNC Bolts

***DB = 12 for UNC Bolts

[1] Pressure shown = Item deliverable

$\frac{\text{PN (bar)}}{10}$ = PN (MPa)

Stainless steel parts may have dimensional deviations. Additional information on request.

*Please add the **suffixes** below according to the material/surface required.

Order code suffixes					
Material	Suffix surface and material	Example only 4 bolt flange	Example 4 bolt flange incl. metr. bolts and O-ring	Example 4 bolt flange incl. UNC bolts and O-ring	Standard sealing material (no additional suffix needed)
Steel, zinc plated, Cr(VI)-free	CF	PEFF32GCF	PEFF32GCFM	PEFF32GCFU	NBR
Stainless steel	SS	PEFF32GSS	PEFF32GSSM	–	VIT

Kovax.cl

PFF-N SAE Straight 4 bolt flange with NPT thread

SAE Flange (ISO 6162-1/-2) / Female NPT thread (SAE 476)

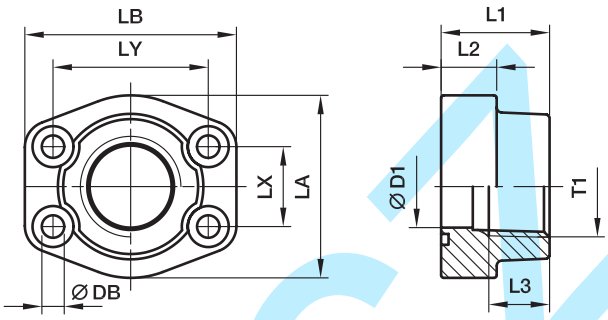

3000 PSI Series

Nom. flange size SAE (in.)	ISO (DN)	T1	D1	L1	L2	L3	LA	LB	LX	LY	DB	Bolts (metr.)	Bolts (unc.)	Weight (steel) kg/piece	Order code*	PN (bar)[1] S	PN (bar)[1] SS
1/2	13	**3/8 NPT**	13	36	16	15	46	58	17.5	38.1	8.9	M 08×30	5/16×1 1/4	0.25	**PFF32N38**	345	345
1/2	13	**1/2 NPT**	13	36	16	15	46	58	17.5	38.1	8.9	M 08×30	5/16×1 1/4	0.28	**PFF32N**	345	345
3/4	19	**3/4 NPT**	19	36	18	19	49	66	22.3	47.6	10.6	M 10×35	3/8×1 1/2	0.39	**PFF33N**	345	345
1	25	**1 NPT**	25	38	18	19	53	71	26.2	52.4	10.6	M 10×35	3/8×1 1/2	0.46	**PFF34N**	345	345
1 1/4	32	**1 1/4 NPT**	31	41	21	22	69	80	30.2	58.7	10.6***	M 10×40	7/16×1 1/2	0.66	**PFF35N**	276	276
1 1/2	38	**1 1/2 NPT**	38	44	25	24	77	94	35.7	69.9	13.3	M 12×45	1/2×1 3/4	1.05	**PFF36N**	207	207
2	51	**2 NPT**	50	45	25	26	89	103	42.9	77.8	13.5	M 12×45	1/2×1 3/4	1.19	**PFF38N**	207	207
2 1/2	64	**2 1/2 NPT**	63	50	25	30	101	115	50.8	88.9	13.5	M 12×45	1/2×1 3/4	1.70	**PFF310N**	172	172
3	76	**3 NPT**	73	50	27	34	124	135	61.9	106.4	16.7	M 16×55	5/8×2 1/4	2.22	**PFF312N**	138	138
3 1/2	89	**3 1/2 NPT**	89	50	27	36	136	152	69.9	120.7	16.7	M 16×55	5/8×2 1/4	2.40	**PFF314N**	34	34
4	102	**4 NPT**	99	50	27	36	146	162	77.8	130.2	16.7	M 16×55	5/8×2 1/4	2.71	**PFF316N**	34	34
5	127	**5 NPT**	120	50	28	36	180	184	92.1	152.4	16.7	M 16×55	5/8×2 1/4	3.25	**PFF320N**	34	34

6000 PSI Series

1/2	13	**3/8 NPT**	13	36	16	15	46	58	18.2	40.5	8.9	M 08×30	5/16×1 1/4	0.26	**PFF62N38**	420	420
1/2	13	**1/2 NPT**	13	36	16	15	46	58	18.2	40.5	8.9	M 08×30	5/16×1 1/4	0.29	**PFF62N**	420	420
3/4	19	**3/4 NPT**	19	36	19	22	53	71	23.8	50.8	10.6	M 10×35	3/8×1 1/2	0.50	**PFF63N**	420	420
1	25	**1 NPT**	25	44	24	24	69	80	27.8	57.2	13.3***	M 12×45	7/16×1 1/2	0.76	**PFF64N**	420	420
1 1/4	32	**1 1/4 NPT**	31	44	27	25	77	94	31.8	66.6	15.0**	M 14×50	1/2×1 3/4	1.20	**PFF65N**	420	420
1 1/4	32	**1 1/4 NPT**	31	44	27	25	77	94	31.8	66.6	13.3	M 12×50	–	1.20	**PFF65/12N**	420	420
1 1/2	38	**1 1/2 NPT**	38	51	30	24	89	106	36.5	79.3	16.7	M 16×55	5/8×2 1/4	1.91	**PFF66N**	420	420
2	51	**2 NPT**	50	70	37	33	116	135	44.5	96.8	20.6	M 20×70	3/4×2 3/4	3.37	**PFF68N**	420	420
2 1/2	64	**2 1/2 NPT**	63	75	45	35	150	166	58.7	123.8	25.0	M 24×90	–	3.05	**PFF610N**	420	420
3	76	**3 NPT**	73	90	55	40	178	208	71.4	152.4	31.0	M 30×110	–	3.45	**PFF612N**	420	420

** DB = 13.3 for UNC Bolts

***DB = 12 for UNC Bolts

[1] Pressure shown = Item deliverable

$\frac{\text{PN (bar)}}{10}$ = PN (MPa)

Stainless steel parts may have dimensional deviations. Additional information on request.

*Please add the **suffixes** below according to the material/surface required.

Order code suffixes					
Material	Suffix surface and material	Example only 4 bolt flange	Example 4 bolt flange incl. metr. bolts and O-ring	Example 4 bolt flange incl. UNC bolts and O-ring	Standard sealing material (no additional suffix needed)
Steel, oil dipped	S	PFF32N38S	PFF32N38SM	PFF32N38SU	NBR
Stainless steel	SS	PFF32N38SS	PFF32N38SSM	–	VIT

PCFF-N SAE Straight 4 bolt flange with NPT thread

SAE Counter flange / Female NPT thread
(ISO 6162-1/-2) (SAE 476)

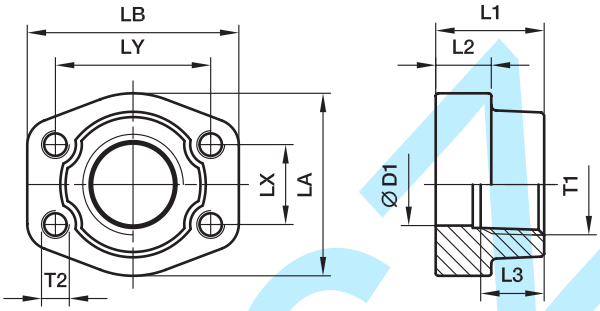

3000 PSI Series

Nom. flange size SAE (in.)	Nom. flange size ISO (DN)	T1	D1	L1	L2	L3	LA	LB	LX	LY	T2 (metr.)	T2 (unc.)	Weight (steel) kg/piece	Order code*	PN (bar)[1] S	PN (bar)[1] SS
1/2	13	**3/8 NPT**	13	36	16	19	47	57	17.5	38.1	M 8	5/16	0.25	**PCFF32N38**	345	345
1/2	13	**1/2 NPT**	13	36	16	19	47	57	17.5	38.1	M 8	5/16	0.28	**PCFF32N**	345	345
3/4	19	**3/4 NPT**	19	36	18	19	49	66	22.3	47.6	M10	3/8	0.44	**PCFF33N**	345	345
1	25	**1 NPT**	25	38	18	19	53	71	26.2	52.4	M10	3/8	0.53	**PCFF34N**	345	345
1 1/4	32	**1 1/4 NPT**	31	41	21	22	69	80	30.2	58.7	M10	7/16	0.66	**PCFF35N**	276	276
1 1/2	38	**1 1/2 NPT**	38	44	25	24	77	94	35.7	69.9	M12	1/2	1.05	**PCFF36N**	207	207
2	51	**2 NPT**	50	45	25	26	89	103	42.9	77.8	M12	1/2	1.19	**PCFF38N**	207	207
2 1/2	64	**2 1/2 NPT**	63	50	25	30	101	115	50.8	88.9	M12	1/2	1.40	**PCFF310N**	172	172
3	76	**3 NPT**	73	50	27	30	124	135	61.9	106.4	M16	5/8	2.15	**PCFF312N**	138	138
3 1/2	89	**3 1/2 NPT**	89	50	27	30	136	152	69.9	120.7	M16	5/8	2.40	**PCFF314N**	34	34
4	102	**4 NPT**	99	50	27	30	146	162	77.8	130.2	M16	5/8	2.85	**PCFF316N**	34	34
5	127	**5 NPT**	120	50	28	30	180	184	92.1	152.4	M16	5/8	3.25	**PCFF320N**	34	34

6000 PSI Series

1/2	13	**3/8 NPT**	13	36	16	19	47	57	18.2	40.5	M 8	5/16	0.26	**PCFF62N38**	420	420
1/2	13	**1/2 NPT**	13	36	16	19	47	57	18.2	40.5	M 8	5/16	0.29	**PCFF62N**	420	420
3/4	19	**3/4 NPT**	19	36	19	22	53	71	23.8	50.8	M10	3/8	0.50	**PCFF63N**	420	420
1	25	**1 NPT**	25	44	24	24	69	80	27.8	57.2	M12	7/16	0.76	**PCFF64N**	420	420
1 1/4	32	**1 1/4 NPT**	31	44	27	25	77	94	31.8	66.6	M14	1/2	1.20	**PCFF65N**	420	420
1 1/4	32	**1 1/4 NPT**	31	44	27	25	77	94	31.8	66.6	M12	–	1.20	**PCFF65/12N**	420	420
1 1/2	38	**1 1/2 NPT**	38	51	30	28	89	106	36.5	79.3	M16	5/8	1.65	**PCFF66N**	420	420
2	51	**2 NPT**	50	70	37	33	116	135	44.5	96.8	M20	3/4	2.45	**PCFF68N**	420	420
2 1/2	64	**2 1/2 NPT**	63	75	45	35	150	166	58.7	123.8	M24	–	3.05	**PCFF610N**	420	420
3	76	**3 NPT**	73	90	55	40	178	208	71.4	152.4	M30	–	3.45	**PCFF612N**	420	420

[1] Pressure shown = Item deliverable

$\frac{\text{PN (bar)}}{10}$ = PN (MPa)

Stainless steel parts may have dimensional deviations. Additional information on request.

*Please add the **suffixes** below according to the material/surface required.

Order code suffixes				
Material	Suffix surface and material	Example 4 bolt flange with metr. threads	Example 4 bolt flange with UNC threads	Standard sealing material (no additional suffix needed)
Steel, oil dipped	S	PCFF32N38SM	PCFF32N38SU	NBR
Stainless steel	SS	PCFF32N38SSM	PCFF32N38SSU	VIT

PEFF-N SAE 90° 4 bolt flange with NPT thread

SAE 90° Flange / Female NPT thread
(ISO 6162-1/-2) (SAE 476)

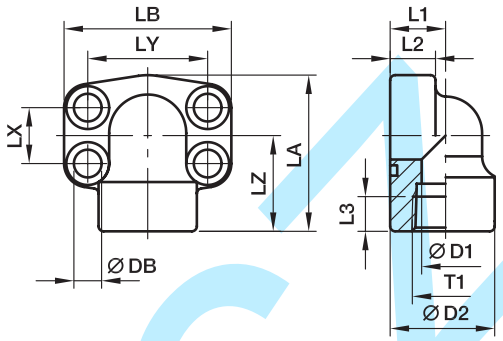

3000 PSI Series

Nom. flange size SAE (in.)	Nom. flange size ISO (DN)	T1	D1	D2	L1	L2	L3	LA	LB	LX	LY	LZ	DB	Bolts (metr.)	Bolts (unc.)	Weight (steel) kg/piece	Order code*	PN (bar)[1] S	PN (bar)[1] SS
1/2	13	**1/2 NPT**	13	34.0	18	16	16	59	56	17.5	38.1	36	8.9	M 08×30	5/16×1 1/4	0.35	**PEFF32N**	348	348
3/4	19	**3/4 NPT**	19	38.5	22	18	19	63	68	22.3	47.6	38	10.6	M 10×35	3/8×1 1/2	0.55	**PEFF33N**	348	348
1	25	**1 NPT**	25	44.5	28	19	19	68	74	26.2	52.4	41	10.6	M 10×35	3/8×1 1/2	0.80	**PEFF34N**	348	348
1 1/4	32	**1 1/4 NPT**	31	53.5	30	22	22	84	81	30.2	58.7	50	10.6***	M 10×35	7/16×1 1/2	1.30	**PEFF35N**	278	278
1 1/2	38	**1 1/2 NPT**	38	62.5	36	25	24	97	95	35.7	69.9	58	13.3	M 12×45	1/2×1 3/4	1.60	**PEFF36N**	210	210
2	51	**2 NPT**	50	77.0	41	25	26	109	105	42.9	77.8	65	13.5	M 12×45	1/2×1 3/4	2.00	**PEFF38N**	210	210
2 1/2	64	**2 1/2 NPT**	60	89.0	50	25	30	127	115	50.8	88.9	77	13.5	M 12×45	1/2×1 3/4	2.40	**PEFF310N**	175	175

6000 PSI Series

1/2	13	**1/2 NPT**	13	34.0	18	16	16	59	56	18.2	40.5	36	8.9	M 08×30	5/16×1 1/4	0.35	**PEFF62N**	420	420
3/4	19	**3/4 NPT**	19	44.5	28	20	22	68	72	23.8	50.8	41	10.6	M 10×35	3/8×1 1/2	0.80	**PEFF63N**	420	420
1	25	**1 NPT**	25	53.5	30	24	24	84	82	27.8	57.2	50	13.3***	M 12×45	7/16×1 1/2	1.30	**PEFF64N**	420	420
1 1/4	32	**1 1/4 NPT**	31	62.5	36	25	25	97	95	31.8	66.6	58	15.0**	M 14×50	1/2×1 3/4	1.60	**PEFF65N**	420	420
1 1/4	32	**1 1/4 NPT**	31	62.5	36	25	25	97	95	31.8	66.6	58	13.3	M 12×50	–	1.60	**PEFF65/12N**	420	420
1 1/2	38	**1 1/2 NPT**	38	77.0	51	26	28	109	110	36.5	79.3	65	16.7	M 16×55	5/8×2 1/4	2.00	**PEFF66N**	420	420
2	51	**2 NPT**	50	87.0	45	35	34	133	134	44.5	96.8	75	20.6	M 20×70	3/4×2 3/4	2.50	**PEFF68N**	420	420

** DB = 13.3 for UNC Bolts

***DB = 12 for UNC Bolts

[1] Pressure shown = Item deliverable

$\frac{\text{PN (bar)}}{10}$ = PN (MPa)

Stainless steel parts may have dimensional deviations. Additional information on request.

*Please add the **suffixes** below according to the material/surface required.

Order code suffixes					
Material	Suffix surface and material	Example only 4 bolt flange	Example 4 bolt flange incl. metr. bolts and O-ring	Example 4 bolt flange incl. UNC bolts and O-ring	Standard sealing material (no additional suffix needed)
Steel, oil dipped	S	PEFF32NS	PEFF32NSM	PEFF32NSU	NBR
Stainless steel	SS	PEFF32NSS	PEFF32NSSM	–	VIT

PFF-..S/L SAE Straight 4 bolt flange with EO 24° cone end

SAE Flange / EO 24° cone end
(ISO 6162-1/-2)

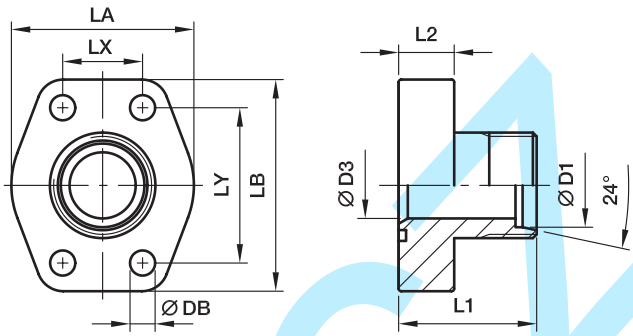

3000 PSI Series

Nom. flange size SAE (in.)	ISO (DN)	D1[2]	D3	L1	L2	LA	LB	LX	LY	DB	Bolts (metr.)	Bolts (unc.)	Weight (steel) kg/piece	Order code*	PN (bar)[1] CF	PN (bar)[1] SS
1/2	13	12S	8	47	16	42	57	17.5	38.1	8.9	M 08×30	5/16×1 1/4	0.27	**PFF32/12S**	348	348
1/2	13	15L	11	47	16	42	57	17.5	38.1	8.9	M 08×30	5/16×1 1/4	0.27	**PFF32/15L**	348	315
1/2	13	16S	12	47	16	42	57	17.5	38.1	8.9	M 08×30	5/16×1 1/4	0.27	**PFF32/16S**	348	348
3/4	19	16S	12	52	18	50	66	22.3	47.6	10.6	M 10×35	3/8×1 1/2	0.42	**PFF33/16S**	348	348
3/4	19	20S	16	52	18	50	66	22.3	47.6	10.6	M 10×35	3/8×1 1/2	0.45	**PFF33/20S**	348	348
3/4	19	22L	18	52	18	50	66	22.3	47.6	10.6	M 10×35	3/8×1 1/2	0.44	**PFF33/22L**	250	160
1	25	20S	16	55	18	55	71	26.2	52.4	10.6	M 10×35	3/8×1 1/2	0.54	**PFF34/20S**	348	348
1	25	25S	20	55	18	55	71	26.2	52.4	10.6	M 10×35	3/8×1 1/2	0.55	**PFF34/25S**	348	348
1	25	28L	23	55	18	55	71	26.2	52.4	10.6	M 10×35	3/8×1 1/2	0.53	**PFF34/28L**	250	160
1 1/4	32	25S	20	60	21	66	80	30.2	58.7	10.6***	M 10×40	7/16×1 1/2	0.83	**PFF35/25S**	278	278
1 1/4	32	30S	25	60	21	66	80	30.2	58.7	10.6***	M 10×40	7/16×1 1/2	0.85	**PFF35/30S**	278	278
1 1/4	32	35L	30	60	21	66	80	30.2	58.7	10.6***	M 10×40	7/16×1 1/2	0.79	**PFF35/35L**	278	278
1 1/2	38	35L	30	70	25	77	94	35.7	69.9	13.3	M 12×45	1/2×1 3/4	1.25	**PFF36/35L**	210	210
1 1/2	38	38S	32	70	25	77	94	35.7	69.9	13.3	M 12×45	1/2×1 3/4	1.30	**PFF36/38S**	210	210
1 1/2	38	42L	36	70	25	77	94	35.7	69.9	13.3	M 12×45	1/2×1 3/4	1.21	**PFF36/42L**	210	210
2	51	38S	32	72	25	90	103	42.9	77.8	13.3	M 12×45	1/2×1 3/4	1.80	**PFF38/38S**	210	210
2	51	42L	36	72	25	90	103	42.9	77.8	13.3	M 12×45	1/2×1 3/4	1.60	**PFF38/42L**	210	210

6000 PSI Series

1/2	13	12S	8	47	16	47	57	18.2	40.5	8.9	M 08×30	5/16×1 1/4	0.27	**PFF62/12S**	420	420
1/2	13	14S	10	47	16	47	57	18.2	40.5	8.9	M 08×30	5/16×1 1/4	0.27	**PFF62/14S**	420	420
1/2	13	16S	12	47	16	47	57	18.2	40.5	8.9	M 08×30	5/16×1 1/4	0.27	**PFF62/16S**	420	420
3/4	19	16S	12	52	18	53	71	23.8	50.8	10.6	M 10×35	3/8×1 1/2	0.50	**PFF63/16S**	420	420
3/4	19	20S	16	52	18	53	71	23.8	50.8	10.6	M 10×35	3/8×1 1/2	0.51	**PFF63/20S**	420	400
3/4	19	22L	18	52	18	53	71	23.8	50.8	10.6	M 10×35	3/8×1 1/2	0.51	**PFF63/22L**	250	160
1	25	20S	16	60	21	66	80	27.8	57.2	13.3***	M 12×45	7/16×1 1/2	0.80	**PFF64/20S**	420	400
1	25	25S	20	60	21	66	80	27.8	57.2	13.3***	M 12×45	7/16×1 1/2	0.80	**PFF64/25S**	420	400
1	25	28L	23	60	21	66	80	27.8	57.2	13.3***	M 12×45	7/16×1 1/2	0.75	**PFF64/28L**	250	160
1 1/4	32	25S	20	68	24	78	94	31.8	66.6	15.0**	M 14×50	1/2×1 3/4	1.15	**PFF65/25S**	420	400
1 1/4	32	25S	20	68	24	78	94	31.8	66.6	13.3	M 12×50	–	1.15	**PFF65/12/25S**	420	400
1 1/4	32	30S	25	68	24	78	94	31.8	66.6	15.0**	M 14×50	1/2×1 3/4	1.18	**PFF65/30S**	420	400
1 1/4	32	30S	25	68	24	78	94	31.8	66.6	13.3	M 12×50	–	1.18	**PFF65/12/30S**	420	400
1 1/4	32	35L	30	68	24	78	94	31.8	66.6	15.0**	M 14×50	1/2×1 3/4	1.15	**PFF65/35L**	250	160
1 1/4	32	35L	30	68	24	78	94	31.8	66.6	13.3	M 12×50	–	1.15	**PFF65/12/35L**	250	160
1 1/4	32	38S	32	68	24	78	94	31.8	66.6	15.0**	M 14×50	1/2×1 3/4	1.28	**PFF65/38S**	420	315
1 1/4	32	38S	32	68	24	78	94	31.8	66.6	13.3	M 12×50	–	1.28	**PFF65/12/38S**	420	315
1 1/2	38	35L	25	72	27	90	106	36.5	79.3	16.7	M 16×55	5/8×2 1/4	1.60	**PFF66/35L**	250	160
1 1/2	38	38S	32	72	27	90	106	36.5	79.3	16.7	M 16×55	5/8×2 1/4	1.70	**PFF66/38S**	315	315
1 1/2	38	42L	36	72	27	90	106	36.5	79.3	16.7	M 16×55	5/8×2 1/4	1.60	**PFF66/42L**	250	160

[2]) L = light series; S = heavy series

Delivery without nut and ring.
Information on ordering complete fittings or alternative sealing materials see page N12.
Stainless steel parts may have dimensional deviations.
Additional information on request.

** DB = 13.3 for UNC Bolts
***DB = 12 for UNC Bolts

[1]) Pressure shown = Item deliverable

$$\frac{PN\ (bar)}{10} = PN\ (MPa)$$

*Please add the **suffixes** below according to the material/surface required.

Order code suffixes					
Material	Suffix surface and material	Example only 4 bolt flange	Example 4 bolt flange incl. metr. bolts and O-ring	Example 4 bolt flange incl. UNC bolts and O-ring	Standard sealing material (no additional suffix needed)
Steel, zinc plated, Cr(VI)-free	CF	PF32/12SCF	PFF32/12SOMDCFM	PFF32/12SOMDCFU	NBR
Stainless steel	SS	PFF32/12S-SS	PFF32/12SOMDSSM	–	VIT

PAFG-90M SAE 90° 4 bolt flange with EO 24° cone end

SAE 90° Flange / EO 24° cone end
(ISO 6162-1/-2)

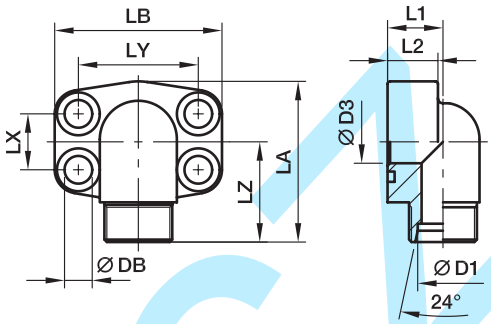

3000 PSI Series

Nom. flange size SAE (in.)	Nom. flange size ISO (DN)	D1[2]	D3	L1	L2	LA	LB	LX	LY	LZ	DB	Bolts (metr.)	Bolts (unc.)	Weight (steel) kg/piece	Order code*	PN (bar)[1] CF	PN (bar)[1] SS
1/2	13	12S	8	18	16	60	57	17.5	38.1	36	8.9	M 08×30	5/16×1 1/4	0.31	**PAFG080/90M12S**	348	348
1/2	13	15L	11	18	16	60	57	17.5	38.1	36	8.9	M 08×30	5/16×1 1/4	0.30	**PAFG080/90M15L**	348	315
1/2	13	16S	12	18	16	60	57	17.5	38.1	36	8.9	M 08×30	5/16×1 1/4	0.30	**PAFG080/90M16S**	348	348
3/4	19	16S	12	22	18	63	66	22.3	47.6	38	10.6	M 10×35	3/8×1 1/2	0.48	**PAFG100/90M16S**	348	348
3/4	19	20S	16	22	18	63	66	22.3	47.6	38	10.6	M 10×35	3/8×1 1/2	0.44	**PAFG100/90M20S**	348	348
3/4	19	22L	18	22	18	63	66	22.3	47.6	38	10.6	M 10×35	3/8×1 1/2	0.45	**PAFG100/90M22L**	250	160
1	25	20S	16	28	19	69	72	26.2	52.4	42	10.6	M 10×35	3/8×1 1/2	0.68	**PAFG102/90M20S**	348	348
1	25	25S	20	28	19	69	72	26.2	52.4	42	10.6	M 10×35	3/8×1 1/2	0.64	**PAFG102/90M25S**	348	348
1	25	28L	23	28	19	69	72	26.2	52.4	42	10.6	M 10×35	3/8×1 1/2	0.62	**PAFG102/90M28L**	250	160
1 1/4	32	25S	20	30	22	84	80	30.2	58.7	50	10.6***	M 10×40	7/16×1 1/2	1.05	**PAFG104/90M25S**	278	278
1 1/4	32	30S	25	30	22	84	80	30.2	58.7	50	10.6***	M 10×40	7/16×1 1/2	1.02	**PAFG104/90M30S**	278	278
1 1/4	32	35L	30	30	22	84	80	30.2	58.7	50	10.6***	M 10×40	7/16×1 1/2	0.94	**PAFG104/90M35L**	278	278
1 1/2	38	35L	30	36	25	88	94	35.7	69.9	58	13.3	M 12×45	1/2×1 3/4	1.51	**PAFG106/90M35L**	210	210
1 1/2	38	38S	32	36	25	88	94	35.7	69.9	58	13.3	M 12×45	1/2×1 3/4	1.55	**PAFG106/90M38S**	210	210
1 1/2	38	42L	36	36	25	88	94	35.7	69.9	58	13.3	M 12×45	1/2×1 3/4	1.42	**PAFG106/90M42L**	210	210
6000 PSI Series																	
1/2	13	12S	8	20	16	60	57	18.2	40.5	36	8.9	M 08×30	5/16×1 1/4	0.31	**PAFG401/90M12S**	420	420
1/2	13	14S	10	20	16	60	57	18.2	40.5	36	8.9	M 08×30	5/16×1 1/4	0.30	**PAFG401/90M14S**	420	420
1/2	13	16S	12	20	16	60	57	18.2	40.5	36	8.9	M 08×30	5/16×1 1/4	0.30	**PAFG401/90M16S**	420	420
3/4	19	16S	12	26	22	68	72	23.8	50.8	41	10.6	M 10×40	3/8×1 1/2	0.68	**PAFG402/90M16S**	420	420
3/4	19	20S	16	26	22	77	72	23.8	50.8	41	10.6	M 10×40	3/8×1 1/2	0.68	**PAFG402/90M20S**	420	400
3/4	19	22L	18	26	22	68	72	23.8	50.8	41	10.6	M 10×40	3/8×1 1/2	0.66	**PAFG402/90M22L**	250	160
1	25	20S	16	30	24	83	80	27.8	57.2	50	13.3***	M 12×45	7/16×1 1/2	1.11	**PAFG403/90M20S**	420	400
1	25	25S	20	30	24	83	80	27.8	57.2	50	13.3***	M 12×45	7/16×1 1/2	1.08	**PAFG403/90M25S**	420	400
1	25	28L	23	30	24	83	80	27.8	57.2	50	13.3***	M 12×45	7/16×1 1/2	1.05	**PAFG403/90M28L**	250	160
1 1/4	32	25S	20	36	25	97	94	31.8	66.6	58	15.0**	M 14×50	1/2×1 3/4	1.70	**PAFG404/90M25S**	420	400
1 1/4	32	25S	20	36	25	97	94	31.8	66.6	58	13.3	M 12×50	–	1.70	**PAFG404/12/90M25S**	420	400
1 1/4	32	30S	25	36	25	97	94	31.8	66.6	58	15.0**	M 14×50	1/2×1 3/4	1.45	**PAFG404/90M30S**	420	400
1 1/4	32	30S	25	36	25	97	94	31.8	66.6	58	13.3	M 12×50	–	1.45	**PAFG404/12/90M30S**	420	400
1 1/4	32	35L	30	36	25	97	94	31.8	66.6	58	15.0**	M 14×50	1/2×1 3/4	1.50	**PAFG404/90M35L**	250	160
1 1/4	32	35L	30	36	25	97	94	31.8	66.6	58	13.3	M 12×50	–	1.50	**PAFG404/12/90M35L**	250	160
1 1/2	38	35L	25	41	26	110	105	36.5	79.3	65	16.7	M 16×55	5/8×2 1/4	2.44	**PAFG405/90M35L**	250	160
1 1/2	38	38S	32/38	41	26	110	105	36.5	79.3	65	16.7	M 16×55	5/8×2 1/4	2.38	**PAFG405/90M38S**	315	315
1 1/2	38	42L	36	41	26	110	105	36.5	79.3	65	16.7	M 16×55	5/8×2 1/4	2.37	**PAFG405/90M42L**	250	160

[2]) L = light series; S = heavy series

Delivery without nut and ring.
Information on ordering complete fittings or alternative sealing materials see page N12.
Stainless steel parts may have dimensional deviations.
Additional information on request.

** DB = 13.3 for UNC Bolts
*** DB = 12 for UNC Bolts
[1]) Pressure shown = Item deliverable

$$\frac{\text{PN (bar)}}{10} = \text{PN (MPa)}$$

*Please add the **suffixes** below according to the material/surface required.

Order code suffixes					
Material	Suffix surface and material	Example only 4 bolt flange	Example 4 bolt flange incl. metr. bolts and O-ring	Example 4 bolt flange incl. UNC bolts and O-ring	Standard sealing material (no additional suffix needed)
Steel, zinc plated, Cr(VI)-free	CF	PAFG080/90M12SCF	PAFG080/90M12SOMDCFM	PAFG080/90M12SOMDCFU	NBR
Stainless steel	SS	PAFG080/90M12S-SS	PAFG080/90M12SOMDSSM	–	VIT

PAFG-G SAE Straight 4 bolt flange with BSPP 60° cone end

SAE Flange (ISO 6162-1/-2) / BSPP 60° cone end (ISO 8434-6)

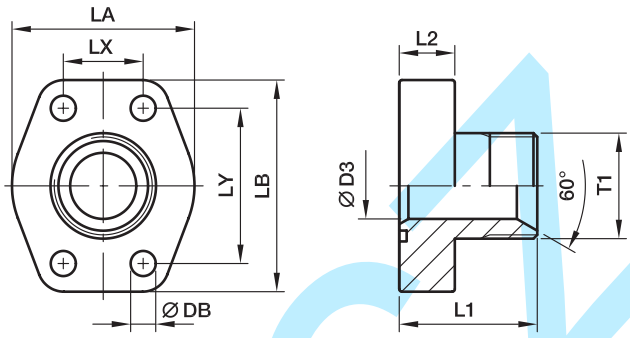

3000 PSI Series

Nom. flange size SAE (in.)	Nom. flange size ISO (DN)	T1	D3	L1	L2	LA	LB	LX	LY	DB	Bolts (metr.)	Bolts (unc.)	Weight (steel) kg/piece	Order code*	PN (bar)[1] CF	PN (bar)[1] SS
1/2	13	**G 3/8**	10	37	16	47	56	17.5	38.1	8.9	M 08×30	5/16×1 1/4	0.25	**PAFG080G38**	348	348
1/2	13	**G 1/2**	12	39	16	47	56	17.5	38.1	8.9	M 08×30	5/16×1 1/4	0.29	**PAFG080G**	348	348
1/2	13	**G 3/4**	13	42	16	47	56	17.5	38.1	8.9	M 08×30	5/16×1 1/4	0.28	**PAFG080G34**	348	348
3/4	19	**G 1/2**	12	42	18	50	66	22.3	47.6	10.6	M 10×35	3/8×1 1/2	0.39	**PAFG100G12**	348	348
3/4	19	**G 3/4**	17	45	18	50	66	22.3	47.6	10.6	M 10×35	3/8×1 1/2	0.40	**PAFG100G**	348	348
3/4	19	**G 1**	19	47	18	50	66	22.3	47.6	10.6	M 10×35	3/8×1 1/2	0.43	**PAFG100G1**	348	348
1	25	**G 3/4**	17	47	18	53	71	26.2	52.4	10.6	M 10×35	3/8×1 1/2	0.44	**PAFG102G34**	348	348
1	25	**G 1**	22	49	18	53	71	26.2	52.4	10.6	M 10×35	3/8×1 1/2	0.49	**PAFG102G**	348	348
1	25	**G 1 1/4**	25	49	18	53	71	26.2	52.4	10.6	M 10×35	3/8×1 1/2	0.57	**PAFG102G114**	348	348
1 1/4	32	**G 1**	22	53	21	69	80	30.2	58.7	10.6***	M 10×40	7/16×1 1/2	0.74	**PAFG104G1**	278	278
1 1/4	32	**G 1 1/4**	27	53	21	69	80	30.2	58.7	10.6***	M 10×40	7/16×1 1/2	0.73	**PAFG104G**	278	278
1 1/4	32	**G 1 1/2**	31	55	21	69	80	30.2	58.7	10.6***	M 10×40	7/16×1 1/2	0.90	**PAFG104G112**	278	278
1 1/2	38	**G 1 1/4**	27	59	24	77	94	35.7	69.9	13.3	M 12×45	1/2×1 3/4	1.12	**PAFG106G114**	210	210
1 1/2	38	**G 1 1/2**	34	61	24	77	94	35.7	69.9	13.3	M 12×45	1/2×1 3/4	1.10	**PAFG106G**	210	210
1 1/2	38	**G 2**	38	63	24	77	94	35.7	69.9	13.3	M 12×45	1/2×1 3/4	1.28	**PAFG106G2**	210	210
2	51	**G 1 1/2**	34	69	25	90	103	42.9	77.8	13.3	M 12×45	1/2×1 3/4	1.59	**PAFG108G112**	210	210
2	51	**G 2**	42	69	25	90	103	42.9	77.8	13.3	M 12×45	1/2×1 3/4	1.62	**PAFG108G**	210	210

6000 PSI Series

1/2	13	**G 3/8**	10	38	16	47	56	18.2	40.5	8.9	M 08×30	5/16×1 1/4	0.24	**PAFG401G38**	420	420
1/2	13	**G 1/2**	12	40	16	47	56	18.2	40.5	8.9	M 08×30	5/16×1 1/4	0.24	**PAFG401G**	420	420
1/2	13	**G 3/4**	13	43	16	47	56	18.2	40.5	8.9	M 08×30	5/16×1 1/4	0.28	**PAFG401G34**	420	420
3/4	19	**G 1/2**	12	44	18	53	71	23.8	50.8	10.6	M 10×35	3/8×1 1/2	0.47	**PAFG402G12**	420	420
3/4	19	**G 3/4**	17	47	18	53	71	23.8	50.8	10.6	M 10×35	3/8×1 1/2	0.48	**PAFG402G**	420	420
3/4	19	**G 1**	19	49	18	53	71	23.8	50.8	10.6	M 10×35	3/8×1 1/2	0.54	**PAFG402G1**	420	420
1	25	**G 3/4**	17	54	21	68	81	27.8	57.2	13.3***	M 12×45	7/16×1 1/2	0.70	**PAFG403G34**	420	420
1	25	**G 1**	22	56	21	68	81	27.8	57.2	13.3***	M 12×45	7/16×1 1/2	0.78	**PAFG403G**	420	420
1	25	**G 1 1/4**	25	56	21	68	81	27.8	57.2	13.3***	M 12×45	7/16×1 1/2	0.80	**PAFG403G114**	420	420
1 1/4	32	**G 1**	22	61	24	78	94	31.8	66.6	15.0**	M 14×50	1/2×1 3/4	1.08	**PAFG404G1**	420	420
1 1/4	32	**G 1**	22	61	24	78	94	31.8	66.6	13.3	M 12×50	–	1.08	**PAFG404/12G1**	420	420
1 1/4	32	**G 1 1/4**	27	61	24	78	94	31.8	66.6	15.0**	M 14×50	1/2×1 3/4	1.13	**PAFG404G**	420	420
1 1/4	32	**G 1 1/4**	27	61	24	78	94	31.8	66.6	13.3	M 12×50	–	1.13	**PAFG404/12G**	420	420
1 1/4	32	**G 1 1/2**	31	63	24	78	94	31.8	66.6	15.0**	M 14×50	1/2×1 3/4	1.15	**PAFG404G112**	420	420
1 1/4	32	**G 1 1/2**	31	63	24	78	94	31.8	66.6	13.3	M 12×50	–	1.15	**PAFG404/12G112**	420	420
1 1/2	38	**G 1 1/4**	27	65	27	90	101	36.5	79.3	16.7	M 16×55	5/8×2 1/4	1.58	**PAFG405G114**	420	420
1 1/2	38	**G 1 1/2**	32	67	27	90	101	36.5	79.3	16.7	M 16×55	5/8×2 1/4	1.55	**PAFG405G**	420	420

Stainless steel parts may have dimensional deviations.
Additional information on request.

** DB = 13.3 for UNC Bolts
***DB = 12 for UNC Bolts
[1]) Pressure shown = Item deliverable

$$\frac{\text{PN (bar)}}{10} = \text{PN (MPa)}$$

*Please add the **suffixes** below according to the material/surface required.

Order code suffixes					
Material	Suffix surface and material	Example only 4 bolt flange	Example 4 bolt flange incl. metr. bolts and O-ring	Example 4 bolt flange incl. UNC bolts and O-ring	Standard sealing material (no additional suffix needed)
Steel, zinc plated, Cr(VI)-free	CF	PAFG080GCF	PAFG080GCFM	PAFG080GCFU	NBR
Stainless steel	SS	PAFG080GSS	PAFG080GSSM	–	VIT

PAFG-90G SAE 90° 4 bolt flange with BSPP 60° cone end

SAE 90° Flange / BSPP 60° cone end
(ISO 6162-1/-2) (ISO 8434-6)

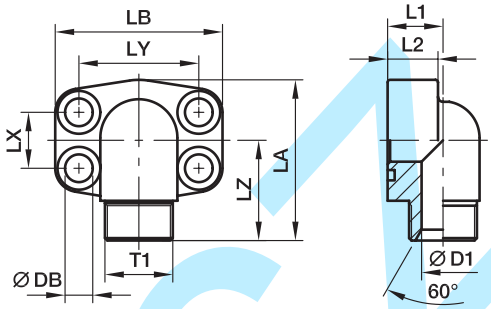

3000 PSI Series

Nom. flange size SAE (in.)	Nom. flange size ISO (DN)	T1	D3	L1	L2	LA	LB	LX	LY	LZ	DB	Bolts (metr.)	Bolts (unc.)	Weight (steel) kg/piece	Order code*	PN (bar)[1) CF	PN (bar)[1) SS
1/2	13	**G 3/8**	10	17	16	60	57	17.5	38.1	37	8.9	M 08×30	5/16×1 1/4	0.30	**PAFG080/90G38**	348	348
1/2	13	**G 1/2**	12	17	16	60	57	17.5	38.1	39	8.9	M 08×30	5/16×1 1/4	0.33	**PAFG080/90G**	348	348
1/2	13	**G 3/4**	13	20	16	60	57	17.5	38.1	40	8.9	M 08×30	5/16×1 1/4	0.31	**PAFG080/90G34**	348	348
3/4	19	**G 1/2**	12	20	18	63	66	22.3	47.6	41	10.6	M 10×35	3/8×1 1/2	0.47	**PAFG100/90G12**	348	348
3/4	19	**G 3/4**	17	20	18	63	66	22.3	47.6	44	10.6	M 10×35	3/8×1 1/2	0.45	**PAFG100/90G**	348	348
3/4	19	**G 1**	19	25	18	63	66	22.3	47.6	45	10.6	M 10×35	3/8×1 1/2	0.60	**PAFG100/90G1**	348	348
1	25	**G 3/4**	17	20	19	80	71	26.2	52.4	47	10.6	M 10×35	3/8×1 1/2	0.68	**PAFG102/90G34**	348	348
1	25	**G 1**	22	25	19	80	71	26.2	52.4	48	10.6	M 10×35	3/8×1 1/2	0.64	**PAFG102/90G**	348	348
1	25	**G 1 1/4**	25	31	19	80	71	26.2	52.4	49	10.6	M 10×40	3/8×1 1/2	0.81	**PAFG102/90G114**	348	348
1 1/4	32	**G 1**	22	25	22	84	80	30.2	58.7	54	10.6***	M 10×40	7/16×1 1/2	1.06	**PAFG104/90G1**	278	278
1 1/4	32	**G 1 1/4**	27	31	22	84	80	30.2	58.7	55	10.6***	M 10×35	7/16×1 1/2	0.93	**PAFG104/90G**	278	278
1 1/4	32	**G 1 1/2**	31	37	22	84	80	30.2	58.7	56	10.6***	M 10×40	7/16×1 1/2	0.96	**PAFG104/90G112**	278	278
1 1/2	38	**G 1 1/4**	27	31	25	88	94	35.7	69.9	59	13.3	M 12×45	1/2×1 3/4	1.44	**PAFG106/90G114**	210	210
1 1/2	38	**G 1 1/2**	34	37	25	88	94	35.7	69.9	61	13.3	M 12×45	1/2×1 3/4	1.49	**PAFG106/90G**	210	210

6000 PSI Series

1/2	13	**G 3/8**	10	17	16	60	57	18.2	40.5	37	8.9	M 08×30	5/16×1 1/4	0.30	**PAFG401/90G38**	420	420
1/2	13	**G 1/2**	12	17	16	60	57	18.2	40.5	39	8.9	M 08×30	5/16×1 1/4	0.32	**PAFG401/90G**	420	420
1/2	13	**G 3/4**	13	20	16	60	57	18.2	40.5	40	8.9	M 08×30	5/16×1 1/4	0.35	**PAFG401/90G34**	420	420
3/4	19	**G 1/2**	12	20	19	68	71	23.8	50.8	45	10.6	M 10×35	3/8×1 1/2	0.73	**PAFG402/90G12**	420	420
3/4	19	**G 3/4**	17	20	19	68	71	23.8	50.8	48	10.6	M 10×35	3/8×1 1/2	0.70	**PAFG402/90G**	420	420
3/4	19	**G 1**	19	25	19	68	71	23.8	50.8	50	10.6	M 10×35	3/8×1 1/2	0.75	**PAFG402/90G1**	420	420
1	25	**G 3/4**	17	25	24	83	80	27.8	57.2	52	13.3***	M 12×45	7/16×1 1/2	0.89	**PAFG403/90G34**	420	420
1	25	**G 1**	22	25	24	83	80	27.8	57.2	54	13.3***	M 12×45	7/16×1 1/2	0.90	**PAFG403/90G**	420	420
1	25	**G 1 1/4**	25	31	24	83	80	27.8	57.2	55	13.3***	M 12×45	7/16×1 1/2	1.07	**PAFG403/90G114**	420	420
1 1/4	32	**G 1**	22	31	25	97	94	31.8	66.6	59	15.0**	M 14×50	1/2×1 3/4	1.66	**PAFG404/90G1**	420	420
1 1/4	32	**G 1**	22	31	25	97	94	31.8	66.6	59	13.3	M 12×50	–	1.66	**PAFG404/12/90G1**	420	420
1 1/4	32	**G 1 1/4**	27	31	25	97	94	31.8	66.6	59	15.0**	M 14×50	1/2×1 3/4	1.59	**PAFG404/90G**	420	420
1 1/4	32	**G 1 1/4**	27	31	25	97	94	31.8	66.6	59	13.3	M 12×50	–	1.59	**PAFG404/12/90G**	420	420
1 1/4	32	**G 1 1/2**	31	37	25	97	94	31.8	66.6	61	15.0**	M 14×50	1/2×1 3/4	1.55	**PAFG404/90G112**	420	420
1 1/4	32	**G 1 1/2**	31	37	25	97	94	31.8	66.6	61	13.3	M 12×50	–	1.55	**PAFG404/12/90G112**	420	420
1 1/2	38	**G 1 1/4**	27	37	26	110	106	36.5	79.3	64	16.7	M 16×55	5/8×2 1/4	2.35	**PAFG405/90G114**	420	420
1 1/2	38	**G 1 1/2**	32	37	26	110	106	36.5	79.3	66	16.7	M 16×55	5/8×2 1/4	2.35	**PAFG405/90G**	420	420

[1) Pressure shown = Item deliverable

$\frac{\text{PN (bar)}}{10}$ = PN (MPa)

** DB = 13.3 for UNC Bolts
*** DB = 12 for UNC Bolts

*Please add the **suffixes** below according to the material/surface required.

Stainless steel parts may have dimensional deviations. Additional information on request.

Order code suffixes					
Material	Suffix surface and material	Example only 4 bolt flange	Example 4 bolt flange incl. metr. bolts and O-ring	Example 4 bolt flange incl. UNC bolts and O-ring	Standard sealing material (no additional suffix needed)
Steel, zinc plated, Cr(VI)-free	CF	PAFG080/90GCF	PAFG080/90GCFM	PAFG080/90GCFU	NBR
Stainless steel	SS	PAFG080/90GSS	PAFG080/90GSSM	–	VIT

PAFG-X SAE Straight 4 bolt flange with Triple-Lok® 37° flare end

SAE Flange / Triple-Lok® 37° flare end
(ISO 6162-1/-2)

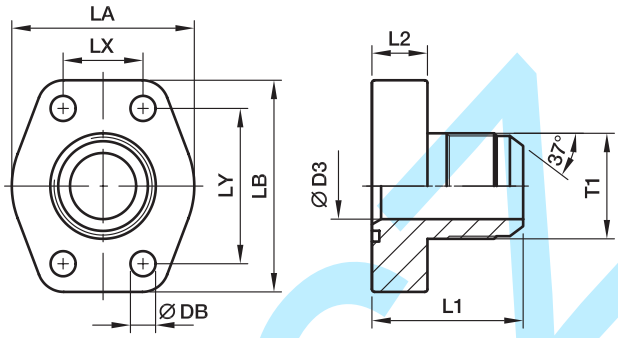

3000 PSI Series

Nom. flange size SAE (in.)	Nom. flange size ISO (DN)	T1	D3	L1	L2	LA	LB	LX	LY	DB	Bolts (metr.)	Bolts (unc.)	Weight (steel) kg/piece	Order code*	PN (bar)[1] CF	PN (bar)[1] SS
1/2	13	**3/4-16UNF**	9.9	41	16	47	57	17.5	38.1	8.9	M 08×30	5/16×1 1/4	0.25	**PAFG080X-A**	348	348
1/2	13	**7/8-14UNF**	12.3	41	16	47	57	17.5	38.1	8.9	M 08×30	5/16×1 1/4	0.25	**PAFG080X-B**	348	348
1/2	13	**1 1/16-12UN**	12.3	46	16	47	57	17.5	38.1	8.9	M 08×30	5/16×1 1/4	0.28	**PAFG080X-C**	348	348
3/4	19	**7/8-14UN**	12.3	47	18	50	66	22.3	47.6	10.6	M 10×35	3/8×1 1/2	0.35	**PAFG100X-A**	348	348
3/4	19	**1 1/16-12UN**	15.5	49	18	50	66	22.3	47.6	10.6	M 10×35	3/8×1 1/2	0.40	**PAFG100X-B**	348	348
3/4	19	**1 5/16-12UN**	21.5	50	18	50	66	22.3	47.6	10.6	M 10×35	3/8×1 1/2	0.41	**PAFG100X-C**	348	348
1	25	**1 1/16-12UN**	15.5	51	18	53	71	26.2	52.4	10.6	M 10×35	3/8×1 1/2	0.44	**PAFG102X-A**	348	348
1	25	**1 5/16-12UN**	21.5	52	18	53	71	26.2	52.4	10.6	M 10×35	3/8×1 1/2	0.46	**PAFG102X-B**	348	348
1	25	**1 5/8-12UN**	27.5	54	18	53	71	26.2	52.4	10.6	M 10×35	3/8×1 1/2	0.56	**PAFG102X-C**	348	348
1 1/4	32	**1 5/16-12UN**	21.5	56	21	69	81	30.2	58.7	10.6***	M 10×40	7/16×1 1/2	0.73	**PAFG104X-A**	278	278
1 1/4	32	**1 5/8-12UN**	27.5	58	21	69	81	30.2	58.7	10.6***	M 10×40	7/16×1 1/2	0.80	**PAFG104X-B**	278	278
1 1/4	32	**1 7/8-12UN**	33.0	61	21	69	81	30.2	58.7	10.6***	M 10×40	7/16×1 1/2	0.92	**PAFG104X-C**	278	278
1 1/2	38	**1 5/8-12UN**	27.5	64	24	77	94	35.7	69.9	13.3	M 12×45	1/2×1 3/4	1.17	**PAFG106X-A**	210	210
1 1/2	38	**1 7/8-12UN**	33.0	67	24	77	94	35.7	69.9	13.3	M 12×45	1/2×1 3/4	1.19	**PAFG106X-B**	210	210

6000 PSI Series

1/2	13	**3/4-16UNF**	9.9	42	16	47	57	18.2	40.5	8.9	M 08×30	5/16×1 1/4	0.26	**PAFG401X-A**	350	350
1/2	13	**7/8-14UNF**	12.3	45	16	47	57	18.2	40.5	8.9	M 08×30	5/16×1 1/4	0.26	**PAFG401X-B**	350	350
1/2	13	**1 1/16-12UN**	12.3	47	16	47	57	18.2	40.5	8.9	M 08×30	5/16×1 1/4	0.29	**PAFG401X-C**	350	350
3/4	19	**7/8-14UN**	12.3	49	18	53	71	23.8	50.8	10.6	M 10×35	3/8×1 1/2	0.45	**PAFG402X-A**	350	350
3/4	19	**1 1/16-12UN**	15.5	51	18	53	71	23.8	50.8	10.6	M 10×35	3/8×1 1/2	0.52	**PAFG402X-B**	350	350
3/4	19	**1 5/16-12UN**	21.5	52	18	53	71	23.8	50.8	10.6	M 10×35	3/8×1 1/2	0.52	**PAFG402X-C**	350	350
1	25	**1 1/16-12UN**	15.5	58	21	66	80	27.8	57.2	13.3***	M 12×45	7/16×1 1/2	0.70	**PAFG403X-A**	350	350
1	25	**1 5/16-12UN**	21.5	59	21	66	80	27.8	57.2	13.3***	M 12×45	7/16×1 1/2	0.71	**PAFG403X-B**	350	350
1	25	**1 5/8-12UN**	27.5	61	21	66	80	27.8	57.2	13.3***	M 12×45	7/16×1 1/2	0.82	**PAFG403X-C**	275	275
1 1/4	32	**1 5/16-12UN**	21.5	64	24	78	94	31.8	66.6	15.0**	M 14×50	1/2×1 3/4	1.07	**PAFG404X-A**	350	350
1 1/4	32	**1 5/16-12UN**	21.5	64	24	78	94	31.8	66.6	13.3	M 12×50	–	1.07	**PAFG404/12X-A**	350	350
1 1/4	32	**1 5/8-12UN**	27.5	66	24	78	94	31.8	66.6	15.0**	M 14×50	1/2×1 3/4	1.13	**PAFG404X-B**	275	275
1 1/4	32	**1 5/8-12UN**	27.5	66	24	78	94	31.8	66.6	13.3	M 12×50	–	1.13	**PAFG404/12X-B**	275	275
1 1/4	32	**1 7/8-12UN**	33.0	69	24	78	94	31.8	66.6	15.0**	M 14×50	1/2×1 3/4	1.10	**PAFG404X-C**	210	210
1 1/4	32	**1 7/8-12UN**	33.0	69	24	78	94	31.8	66.6	13.3	M 12×50	–	1.10	**PAFG404/12X-C**	210	210
1 1/2	38	**1 5/8-12UN**	27.5	70	27	90	106	36.5	79.3	16.7	M 16×55	5/8×2 1/4	1.60	**PAFG405X-A**	275	275
1 1/2	38	**1 7/8-12UN**	33.0	73	27	90	106	36.5	79.3	16.7	M 16×55	5/8×2 1/4	1.62	**PAFG405X-B**	210	210

[1] Pressure shown = Item deliverable

$\frac{PN\ (bar)}{10} = PN\ (MPa)$

** DB = 13.3 for UNC Bolts
***DB = 12 for UNC Bolts

*Please add the **suffixes** below according to the material/surface required.

Stainless steel parts may have dimensional deviations. Additional information on request.

Order code suffixes					
Material	Suffix surface and material	Example only 4 bolt flange	Example 4 bolt flange incl. metr. bolts and O-ring	Example 4 bolt flange incl. UNC bolts and O-ring	Standard sealing material (no additional suffix needed)
Steel, zinc plated, Cr(VI)-free	CF	PAFG080X-ACF	PAFG080X-ACFM	PAFG080X-ACFU	NBR
Stainless steel	SS	PAFG080X-ASS	PAFG080X-ASSM	–	VIT

PAFG-90X SAE 90° 4 bolt flange with Triple-Lok® 37° flare end

SAE 90° Flange / Triple-Lok® 37° flare end
(ISO 6162-1/-2)

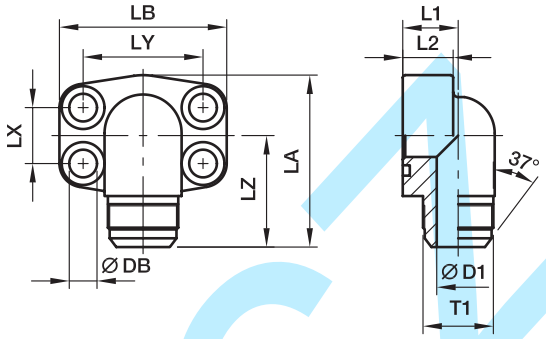

3000 PSI Series

Nom. flange size SAE (in.)	Nom. flange size ISO (DN)	T1	D1	L1	L2	LA	LB	LX	LY	LZ	DB	Bolts (metr.)	Bolts (unc.)	Weight (steel) kg/piece	Order code*	PN (bar)[1] CF	PN (bar)[1] SS
1/2	13	3/4-16	9.9	17	16	60	56	17.5	38.1	40	8.9	M 08×30	5/16×1 1/4	0.30	**PAFG080/90X-A**	348	348
1/2	13	7/8-14	12.3	17	16	60	56	17.5	38.1	42	8.9	M 08×30	5/16×1 1/4	0.30	**PAFG080/90X-B**	348	348
1/2	13	1 1/16-12	12.3	20	16	60	57	17.5	38.1	43	8.9	M 08×30	5/16×1 1/4	0.30	**PAFG080/90X-C**	348	348
3/4	19	7/8-14	12.3	20	18	63	66	22.3	47.6	45	10.6	M 10×35	3/8×1 1/2	0.50	**PAFG100/90X-A**	348	348
3/4	19	1 1/16-12	15.5	20	18	63	66	22.3	47.6	47	10.6	M 10×35	3/8×1 1/2	0.50	**PAFG100/90X-B**	348	348
3/4	19	1 5/16-12	21.5	25	18	63	66	22.3	47.6	48	10.6	M 10×35	3/8×1 1/2	0.58	**PAFG100/90X-C**	348	348
1	25	1 1/16-12	15.5	20	19	80	71	26.2	52.4	50	10.6	M 10×35	3/8×1 1/2	0.62	**PAFG102/90X-A**	348	348
1	25	1 5/16-12	21.5	25	19	80	71	26.2	52.4	51	10.6	M 10×35	3/8×1 1/2	0.68	**PAFG102/90X-B**	348	348
1 1/4	32	1 5/16-12	21.5	25	22	84	80	30.2	58.7	56	10.6***	M 10×40	7/16×1 1/2	1.06	**PAFG104/90X-A**	278	278
1 1/4	32	1 5/8-12	27.5	31	22	84	80	30.2	58.7	58	10.6***	M 10×40	7/16×1 1/2	1.03	**PAFG104/90X-B**	278	278
1 1/4	32	1 7/8-12	33.0	37	22	84	80	30.2	58.7	61	10.6***	M 10×40	7/16×1 1/2	0.96	**PAFG104/90X-C**	278	278
1 1/2	38	1 5/8-12	27.5	31	25	88	94	35.7	69.9	63	13.3	M 12×45	1/2×1 3/4	1.62	**PAFG106/90X-A**	210	210
1 1/2	38	1 7/8-12	33.0	37	25	88	94	35.7	69.9	66	13.3	M 12×45	1/2×1 3/4	1.53	**PAFG106/90X-B**	210	210

6000 PSI Series

1/2	13	3/4-16	9.9	17	16	60	57	18.2	40.5	40	8.9	M 08×30	5/16×1 1/4	0.30	**PAFG401/90X-A**	350	350
1/2	13	7/8-14	12.3	17	16	60	57	18.2	40.5	42	8.9	M 08×30	5/16×1 1/4	0.32	**PAFG401/90X-B**	350	350
1/2	13	1 1/16-12	12.3	20	16	60	57	18.2	40.5	43	8.9	M 08×30	5/16×1 1/4	0.35	**PAFG401/90X-C**	350	350
3/4	19	7/8-14	12.3	20	19	68	72	23.8	50.8	49	10.6	M 10×35	3/8×1 1/2	0.71	**PAFG402/90X-A**	350	350
3/4	19	1 1/16-12	15.5	20	19	68	72	23.8	50.8	51	10.6	M 10×35	3/8×1 1/2	0.67	**PAFG402/90X-B**	350	350
3/4	19	1 5/16-12	21.5	25	19	68	72	23.8	50.8	52	10.6	M 10×35	3/8×1 1/2	0.71	**PAFG402/90X-C**	350	350
1	25	1 1/16-12	15.5	25	24	90	80	27.8	57.2	55	13.3***	M 12×45	7/16×1 1/2	0.93	**PAFG403/90X-A**	350	350
1	25	1 5/16-12	25/21.5	25	24	90	80	27.8	57.2	56	13.3***	M 12×45	7/16×1 1/2	0.88	**PAFG403/90X-B**	350	350
1	25	1 5/8-12	27.5	31	24	90	80	27.8	57.2	58	13.3***	M 12×45	7/16×1 1/2	1.04	**PAFG403/90X-C**	275	275
1 1/4	32	1 5/16-12	21.5	31	25	97	94	31.8	66.6	56	15.0**	M 14×50	1/2×1 3/4	1.53	**PAFG404/90X-A**	350	350
1 1/4	32	1 5/16-12	21.5	31	25	97	94	31.8	66.6	56	13.3	M 12×50	–	1.53	**PAFG404/12/90X-A**	350	350
1 1/4	32	1 5/8-12	27.5	31	25	97	94	31.8	66.6	63	15.0**	M 14×50	1/2×1 3/4	1.56	**PAFG404/90X-B**	275	275
1 1/4	32	1 5/8-12	27.5	31	25	97	94	31.8	66.6	63	13.3	M 12×50	–	1.56	**PAFG404/12/90X-B**	275	275
1 1/4	32	1 7/8-12	33.0	37	25	97	94	31.8	66.6	63	15.0**	M 14×50	1/2×1 3/4	1.63	**PAFG404/90X-C**	210	210
1 1/4	32	1 7/8-12	33.0	37	25	97	94	31.8	66.6	63	13.3	M 12×50	–	1.63	**PAFG404/12/90X-C**	210	210
1 1/2	38	1 5/8-12	27.5	37	26	110	106	36.5	79.3	67	16.7	M 16×55	5/8×2 1/4	2.61	**PAFG405/90X-A**	275	275
1 1/2	38	1 7/8-12	33.0	37	26	110	106	36.5	79.3	70	16.7	M 16×55	5/8×2 1/4	2.49	**PAFG405/90X-B**	210	210

[1] Pressure shown = Item deliverable

$\frac{PN\ (bar)}{10} = PN\ (MPa)$

** DB = 13.3 for UNC Bolts
*** DB = 12 for UNC Bolts

*Please add the **suffixes** below according to the material/surface required.

Stainless steel parts may have dimensional deviations.
Additional information on request.

Order code suffixes					
Material	Suffix surface and material	Example only 4 bolt flange	Example 4 bolt flange incl. metr. bolts and O-ring	Example 4 bolt flange incl. UNC bolts and O-ring	Standard sealing material (no additional suffix needed)
Steel, zinc plated, Cr(VI)-free	CF	PAFG080/90X-ACF	PAFG080/90X-ACFM	PAFG080/90X-ACFU	NBR
Stainless steel	SS	PAFG080/90X-ASS	PAFG080/90X-ASSM	–	VIT

PAFG-L SAE Straight 4 bolt flange with O-Lok® ORFS end

SAE Flange / O-Lok® ORFS end
(ISO 6162-1/-2)

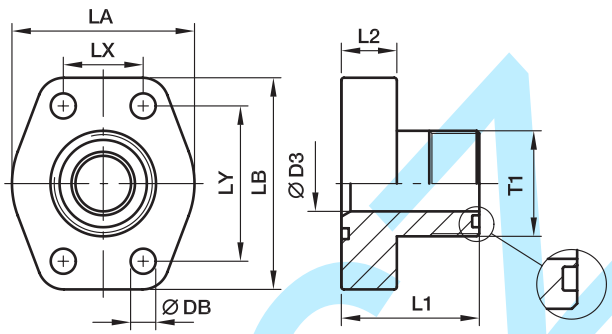

3000 PSI Series

Nom. flange size SAE (in.)	Nom. flange size ISO (DN)	T1	D3	L1	L2	LA	LB	LX	LY	DB	Bolts (metr.)	Bolts (unc.)	Weight (steel) kg/piece	Order code*	PN (bar)[1] CF	PN (bar)[1] SS
1/2	13	**11/16-16UN**	6.0	37	16	47	56	17.5	38.1	8.9	M 08×30	5/16×1 1/4	0.24	**PAFG080L-A**	348	348
1/2	13	**13/16-16UN**	9.0	39	16	47	56	17.5	38.1	8.9	M 08×30	5/16×1 1/4	0.25	**PAFG080L-B**	348	348
1/2	13	**1-14UN**	12.0	42	16	47	56	17.5	38.1	8.9	M 08×30	5/16×1 1/4	0.27	**PAFG080L-C**	348	348
3/4	19	**1-14UN**	12.0	45	18	50	66	22.3	47.6	10.6	M 10×35	3/8×1 1/2	0.44	**PAFG100L-A**	348	348
3/4	19	**1 3/16-12UN**	15.0	47	18	50	66	22.3	47.6	10.6	M 10×35	3/8×1 1/2	0.46	**PAFG100L-B**	348	348
1	25	**1 3/16-12UN**	15.0	49	18	53	71	26.2	52.4	10.6	M 10×35	3/8×1 1/2	0.53	**PAFG102L-A**	348	348
1	25	**1 7/16-12UN**	20.0	49	18	53	71	26.2	52.4	10.6	M 10×35	3/8×1 1/2	0.54	**PAFG102L-B**	348	348
1 1/4	32	**1 7/16-12UN**	20.0	53	21	69	80	30.2	58.7	10.6***	M 10×40	7/16×1 1/2	0.80	**PAFG104L-A**	278	278
1 1/4	32	**1 11/16-12UN**	26.0	53	21	69	80	30.2	58.7	10.6***	M 10×40	7/16×1 1/2	0.83	**PAFG104L-B**	278	278
1 1/2	38	**1 11/16-12UN**	26.0	61	24	77	94	35.7	69.9	13.3	M 12×45	1/2×1 3/4	1.34	**PAFG106L-A**	210	210
1 1/2	38	**2-12UN**	32.0	61	24	77	94	35.7	69.9	13.3	M 12×45	1/2×1 3/4	1.20	**PAFG106L-B**	210	210

6000 PSI Series

1/2	13	**11/16-16UN**	6.0	38	16	47	57	18.2	40.5	8.9	M 08×30	5/16×1 1/4	0.25	**PAFG401L-A**	420	420
1/2	13	**13/16-16UN**	9.0	40	16	47	57	18.2	40.5	8.9	M 08×30	5/16×1 1/4	0.27	**PAFG401L-B**	420	420
1/2	13	**1-14UN**	12.5	43	16	47	57	18.2	40.5	8.9	M 08×30	5/16×1 1/4	0.28	**PAFG401L-C**	420	420
3/4	19	**1-14UN**	12.5	47	18	53	72	23.8	50.8	10.6	M 10×35	3/8×1 1/2	0.49	**PAFG402L-A**	420	420
3/4	19	**1 3/16-12UN**	15.0	49	18	53	72	23.8	50.8	10.6	M 10×35	3/8×1 1/2	0.51	**PAFG402L-B**	420	420
1	25	**1 3/16-12UN**	15.0	56	21	68	80	27.8	57.2	13.3***	M 12×45	7/16×1 1/2	0.75	**PAFG403L-A**	420	420
1	25	**1 7/16-12UN**	20.0	56	21	68	80	27.8	57.2	13.3***	M 12×45	7/16×1 1/2	0.77	**PAFG403L-B**	420	420
1 1/4	32	**1 7/16-12UN**	20.0	61	24	78	94	31.8	66.6	15.0**	M 14×50	1/2×1 3/4	1.15	**PAFG404L-A**	345	345
1 1/4	32	**1 7/16-12UN**	20.0	61	24	78	94	31.8	66.6	13.3	M 12×50	–	1.15	**PAFG404/12L-A**	345	345
1 1/4	32	**1 11/16-12UN**	26.0	61	24	78	94	31.8	66.6	15.0**	M 14×50	1/2×1 3/4	1.15	**PAFG404L-B**	345	345
1 1/4	32	**1 11/16-12UN**	26.0	61	24	78	94	31.8	66.6	13.3	M 12×50	–	1.15	**PAFG404/12L-B**	345	345
1 1/2	38	**1 11/16-12UN**	26.0	65	27	90	106	36.5	79.3	16.7	M 16×55	5/8×2 1/4	1.66	**PAFG405L-A**	310	310
1 1/2	38	**2-12UN**	32.0	67	27	90	106	36.5	79.3	16.7	M 16×55	5/8×2 1/4	1.75	**PAFG405L-B**	310	310

**DB = 13.3 for UNC Bolts
***DB = 12 for UNC Bolts

[1]) Pressure shown = Item deliverable

$\frac{\text{PN (bar)}}{10}$ = PN (MPa)

Stainless steel parts may have dimensional deviations. Additional information on request.

*Please add the **suffixes** below according to the material/surface required.

Order code suffixes					
Material	Suffix surface and material	Example only 4 bolt flange	Example 4 bolt flange incl. metr. bolts and O-ring	Example 4 bolt flange incl. UNC bolts and O-ring	Standard sealing material (no additional suffix needed)
Steel, zinc plated, Cr(VI)-free	CF	PAFG080L-ACF	PAFG080L-ACFM	PAFG080L-ACFU	NBR
Stainless steel	SS	PAFG080L-ASS	PAFG080L-ASSM	–	VIT

PAFG-90L SAE 90° 4 bolt flange with O-Lok® ORFS end

SAE 90° Flange / O-Lok® ORFS end
(ISO 6162-1/-2)

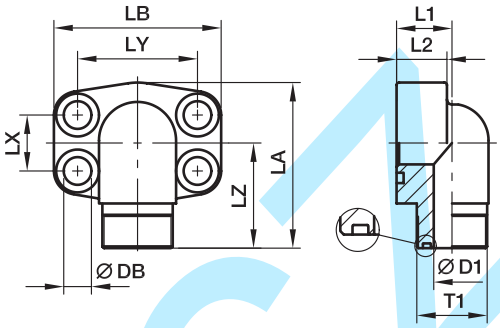

3000 PSI Series

Nom. flange size SAE (in.)	Nom. flange size ISO (DN)	T1	D1	L1	L2	LA	LB	LX	LY	LZ	DB	Bolts (metr.)	Bolts (unc.)	Weight (steel) kg/piece	Order code*	PN (bar)[1] CF	PN (bar)[1] SS
1/2	13	**11/16-16UN**	6.5	17	16	60	57	17.5	38.1	37.0	8.9	M 08×30	5/16×1 1/4	0.31	**PAFG080/90L-A**	348	348
1/2	13	**13/16-16UN**	9.5	17	16	60	57	17.5	38.1	39.0	8.9	M 08×30	5/16×1 1/4	0.31	**PAFG080/90L-B**	348	348
1/2	13	**1-14UN**	12.5	20	16	60	57	17.5	38.1	36.5	8.9	M 08×30	5/16×1 1/4	0.31	**PAFG080/90L-C**	348	348
3/4	19	**1-14UN**	12.5	20	18	63	66	22.3	47.6	44.0	10.6	M 10×35	3/8×1 1/2	0.56	**PAFG100/90L-A**	348	348
3/4	19	**1 3/16-12UN**	15.5	25	24	63	66	22.3	47.6	45.0	10.6	M 10×35	3/8×1 1/2	0.60	**PAFG100/90L-B**	348	348
1	25	**1 3/16-12UN**	15.5	25	19	80	72	26.2	52.4	48.0	10.6	M 10×35	3/8×1 1/2	0.73	**PAFG102/90L-A**	348	348
1	25	**1 7/16-12UN**	20.5	31	19	80	72	26.2	52.4	49.0	10.6	M 10×35	3/8×1 1/2	0.64	**PAFG102/90L-B**	348	348
1 1/4	32	**1 7/16-12UN**	20.5	31	22	84	80	30.2	58.7	55.0	10.6***	M 10×40	7/16×1 1/2	1.15	**PAFG104/90L-A**	278	278
1 1/4	32	**1 11/16-12UN**	26.5	31	22	84	80	30.2	58.7	55.0	10.6***	M 10×40	7/16×1 1/2	1.08	**PAFG104/90L-B**	278	278
1 1/2	38	**1 11/16-12UN**	26.5	36	25	88	94	35.7	69.9	59.0	13.3	M 12×45	1/2×1 3/4	1.66	**PAFG106/90L-A**	210	210
1 1/2	38	**2-12UN**	32.5	37	25	88	94	35.7	69.9	61.0	13.3	M 12×45	1/2×1 3/4	1.60	**PAFG106/90L-B**	210	210

6000 PSI Series

1/2	13	**11/16-16UN**	16.0	17	16	60	57	18.2	40.5	37.0	8.9	M 08×30	5/16×1 1/4	0.33	**PAFG401/90L-A**	420	420
1/2	13	**13/16-16UN**	16.0	17	16	60	57	18.2	40.5	39.0	8.9	M 08×30	5/16×1 1/4	0.33	**PAFG401/90L-B**	420	420
1/2	13	**1-14UN**	16.0	20	16	60	57	18.2	40.5	40.0	8.9	M 08×30	5/16×1 1/4	0.33	**PAFG401/90L-C**	420	420
3/4	19	**1-14UN**	19.0	20	19	68	71	23.8	50.8	48.0	10.6	M 10×35	3/8×1 1/2	0.70	**PAFG402/90L-A**	420	420
3/4	19	**1 3/16-12UN**	19.0	25	19	68	71	23.8	50.8	50.0	10.6	M 10×35	3/8×1 1/2	0.73	**PAFG402/90L-B**	420	420
1	25	**1 3/16-12UN**	24.0	25	24	83	80	27.8	57.2	54.0	13.3***	M 12×45	7/16×1 1/2	0.96	**PAFG403/90L-A**	420	420
1	25	**1 7/16-12UN**	24.0	31	24	83	80	27.8	57.2	55.0	13.3***	M 12×45	7/16×1 1/2	1.14	**PAFG403/90L-B**	420	420
1 1/4	32	**1 7/16-12UN**	25.0	31	25	97	94	31.8	66.6	59.0	15.0**	M 14×50	1/2×1 3/4	1.76	**PAFG404/90L-A**	420	420
1 1/4	32	**1 7/16-12UN**	25.0	31	25	97	94	31.8	66.6	59.0	13.3	M 12×50	–	1.76	**PAFG404/12/90L-A**	420	420
1 1/4	32	**1 11/16-12UN**	25.0	31	25	97	94	31.8	66.6	59.0	15.0**	M 14×50	1/2×1 3/4	1.71	**PAFG404/90L-B**	345	345
1 1/4	32	**1 11/16-12UN**	25.0	31	25	97	94	31.8	66.6	59.0	13.3	M 12×50	–	1.71	**PAFG404/12/90L-B**	345	345
1 1/2	38	**1 11/16-12UN**	26.0	37	26	110	106	36.5	79.3	64.0	16.7	M 16×55	5/8×2 1/4	2.69	**PAFG405/90L-A**	345	345
1 1/2	38	**2-12UN**	26.0	37	26	110	106	36.5	79.3	66.0	16.7	M 16×55	5/8×2 1/4	2.50	**PAFG405/90L-B**	310	310

** DB = 13.3 for UNC Bolts
***DB = 12 for UNC Bolts
[1] Pressure shown = Item deliverable

$\frac{\text{PN (bar)}}{10}$ = PN (MPa)

Stainless steel parts may have dimensional deviations. Additional information on request.

*Please add the **suffixes** below according to the material/surface required.

Order code suffixes					
Material	Suffix surface and material	Example only 4 bolt flange	Example 4 bolt flange incl. metr. bolts and O-ring	Example 4 bolt flange incl. UNC bolts and O-ring	Standard sealing material (no additional suffix needed)
Steel, zinc plated, Cr(VI)-free	CF	PAFG080/90L-ACF	PAFG080/90L-ACFM	PAFG080/90L-ACFU	NBR
Stainless steel	SS	PAFG080/90L-ASS	PAFG080/90L-ASSM	–	VIT

PAFS-B SAE Straight 4 bolt flange (butt weld)

SAE Flange / Butt weld tube end
(ISO 6162-1/-2)

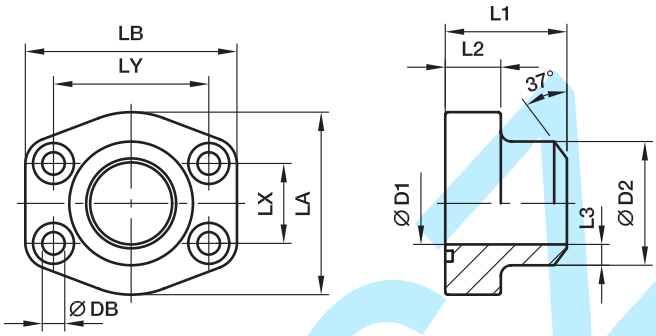

3000 PSI Series

Nom. flange size SAE (in.)	ISO (DN)	max.	D1	D2	L1	L2	L3	LA	LB	LX	LY	DB	Bolts (metr.)	Bolts (unc.)	Weight (steel) kg/piece	Order code*	PN (bar)[1] S	PN (bar)[1] SS
1/2	13	21.3	13	21.6	36	16	4.3	46	58	17.5	38.1	8.9	M 08×30	5/16×1 1/4	0.28	**PAFS080B**	345	345
3/4	19	26.9	19	27.2	36	18	4.1	49	66	22.3	47.6	10.6	M 10×35	3/8×1 1/2	0.36	**PAFS100B**	345	345
1	25	33.7	25	34.5	38	18	4.7	53	71	26.2	52.4	10.6	M 10×35	3/8×1 1/2	0.46	**PAFS102B**	345	345
1 1/4	32	42.4	31	42.8	41	21	5.9	69	81	30.2	58.7	10.6***	M 10×40	7/16×1 1/2	0.69	**PAFS104B**	276	276
1 1/2	38	48.3	38	48.6	44	25	5.3	77	94	35.7	69.9	13.3	M 12×45	1/2×1 3/4	1.01	**PAFS106B**	207	207
2	51	60.3	50	61.0	45	25	5.5	89	103	42.9	77.8	13.3	M 12×45	1/2×1 3/4	1.16	**PAFS108B**	207	207
2 1/2	64	76.1	63	76.6	50	25	6.8	101	115	50.8	88.9	13.3	M 12×45	1/2×1 3/4	1.45	**PAFS110B**	172	172
3	76	88.9	73	89.0	50	27	8.0	124	135	61.9	106.4	16.7	M 16×55	5/8×2 1/4	2.29	**PAFS112B**	138	138
3 1/2	89	101.6	89	103.0	50	27	7.0	134	153	69.9	120.7	16.7	M 16×55	5/8×2 1/4	2.80	**PAFS114B**	34	34
4	102	114.3	99	115.0	50	27	8.0	147	163	77.8	130.2	16.7	M 16×55	5/8×2 1/4	3.30	**PAFS116B**	34	34
5	127	140.0	120	141.0	50	28	10.5	180	184	92.1	152.4	16.7	M 16×55	5/8×2 1/4	4.50	**PAFS118B**	34	34

6000 PSI Series

1/2	13	17.2	10	17.5	36	16	3.7	46	58	18.2	40.5	8.9	M 08×30	5/16×1 1/4	0.28	**PAFS401B38**	420	420
1/2	13	21.3	13	21.6	36	16	4.3	46	58	18.2	40.5	8.9	M 08×30	5/16×1 1/4	0.28	**PAFS401B**	420	420
3/4	19	26.9	18	27.2	36	18	4.6	53	72	23.8	50.8	10.6	M 10×35	3/8×1 1/2	0.48	**PAFS402B**	420	420
1	25	33.7	22	34.5	44	24	6.3	68	81	27.8	57.2	10.6***	M 12×45	7/16×1 1/2	0.80	**PAFS403B**	420	420
1 1/4	32	42.4	28	42.8	44	27	7.4	78	95	31.8	66.6	15.0**	M 14×50	1/2×1 3/4	1.17	**PAFS404B**	420	420
1 1/4	32	42.4	28	42.8	44	27	7.4	78	95	31.8	66.6	13.3	M 12×50	–	1.17	**PAFS404/12B**	420	420
1 1/2	38	48.3	32	48.6	51	30	8.3	89	106	36.5	79.4	16.7	M 16×55	5/8×2 1/4	1.60	**PAFS405B**	420	420
2	51	60.3	41	61.0	70	37	10.0	116	135	44.5	96.8	20.6	M 20×70	3/4×2 3/4	3.50	**PAFS406B**	420	420
2 1/2	64	76.1	50	76.6	75	45	13.0	150	166	58.7	123.8	25.0	M 24×90	–	6.25	**PAFS407B**	420	420
3	76	88.9	58	90.0	90	55	16.0	178	208	71.4	152.4	32.0	M 30×110	–	12.25	**PAFS408B**	420	420

** DB = 13.3 for UNC Bolts
***DB = 12 for UNC Bolts
[1] Pressure shown = Item deliverable

$\frac{\text{PN (bar)}}{10}$ = PN (MPa)

The pressures given here are the maximum allowable for the flange fittings. If the pipe or tube used has a lower pressure rating, then the welded assembly rating will be the lower one, assuming the weld is adequately strong.

Stainless steel parts may have dimensional deviations. Additional information on request.

*Please add the **suffixes** below according to the material/surface required.

Order code suffixes					
Material	Suffix surface and material	Example only 4 bolt flange	Example 4 bolt flange incl. metr. bolts and O-ring	Example 4 bolt flange incl. UNC bolts and O-ring	Standard sealing material (no additional suffix needed)
Steel, blanc oil dipped	S	PAFS080BS	PAFS080BSM	PAFS080BSU	NBR
Stainless steel	SS	PAFS080BSS	PAFS080BSSM	–	VIT

PGFS-B SAE Straight 4 bolt counter flange (butt weld)

SAE Counter flange / Butt weld tube end
(ISO 6162-1/-2)

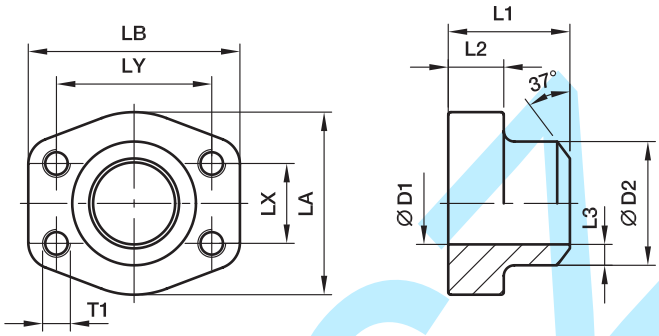

3000 PSI Series

Nom. flange size SAE (in.)	ISO (DN)	max.	D1	D2	L1	L2	L3	LA	LB	LX	LY	Bolts (metr.)	Bolts (unc.)	Weight (steel) kg/piece	Order code*	PN (bar)[1] S	PN (bar)[1] SS
1/2	13	21.3	13	21.6	36	16	4.3	47	57	17.5	38.1	M08	5/16	0.28	**PGFS080B**	345	345
3/4	19	26.9	19	27.2	36	18	4.1	49	66	22.3	47.6	M10	3/8	0.38	**PGFS100B**	345	345
1	25	33.7	25	34.5	38	18	4.7	53	71	26.2	52.4	M10	3/8	0.48	**PGFS102B**	345	345
1 1/4	32	42.4	31	42.8	41	21	5.9	69	80	30.2	58.7	M10	7/16	0.74	**PGFS104B**	276	276
1 1/2	38	48.3	38	48.6	44	25	5.3	77	94	35.7	69.9	M12	1/2	1.05	**PGFS106B**	207	207
2	51	60.3	50	61.0	45	25	5.5	89	103	42.9	77.8	M12	1/2	1.21	**PGFS108B**	207	207
2 1/2	64	76.1	63	76.6	50	25	6.8	101	115	50.8	88.9	M12	1/2	1.52	**PGFS110B**	172	172
3	76	88.9	73	89.0	50	27	8.0	124	135	61.9	106.4	M16	5/8	2.34	**PGFS112B**	138	138
3 1/2	89	101.6	89	103.0	50	27	7.0	134	153	69.9	120.7	M16	5/8	3.04	**PGFS114B**	34	34
4	102	114.3	99	115.0	50	27	8.0	147	163	77.8	130.2	M16	5/8	3.36	**PGFS116B**	34	34
5	127	140.0	120	141.0	50	28	10.5	180	184	92.1	152.4	M16	5/8	4.55	**PGFS118B**	34	34

6000 PSI Series

1/2	13	17.2	10	17.5	36	16	3.7	47	57	18.2	40.5	M08	5/16	0.29	**PGFS401B38**	420	420
1/2	13	21.3	13	21.6	36	16	4.3	47	57	18.2	40.5	M08	5/16	0.29	**PGFS401B**	420	420
3/4	19	26.9	18	27.2	36	19	4.6	53	71	23.8	50.8	M10	3/8	0.52	**PGFS402B**	420	420
1	25	33.7	22	34.5	44	24	6.3	66	82	27.8	57.2	M12	7/16	0.85	**PGFS403B**	420	420
1 1/4	32	42.4	28	42.8	44	27	7.4	78	95	31.8	66.6	M14	1/2	1.23	**PGFS404B**	420	420
1 1/4	32	42.4	28	42.8	44	27	7.4	78	95	31.8	66.6	M12	–	1.23	**PGFS404/12B**	420	420
1 1/2	38	48.3	32	48.6	51	30	8.3	89	106	36.5	79.3	M16	5/8	1.71	**PGFS405B**	420	420
2	51	60.3	41	61.0	70	37	10.0	116	135	44.5	96.8	M20	3/4	3.56	**PGFS406B**	420	420
2 1/2	64	76.1	50	76.6	75	45	13.0	150	166	58.7	123.8	M24	–	6.94	**PGFS407B**	420	420
3	76	88.9	58	90.0	90	55	16.0	178	208	71.4	152.4	M30	–	12.60	**PGFS408B**	420	420

[1] Pressure shown = Item deliverable

$$\frac{\text{PN (bar)}}{10} = \text{PN (MPa)}$$

The pressures given here are the maximum allowable for the flange fittings. If the pipe or tube used has a lower pressure rating, then the welded assembly rating will be the lower one, assuming the weld is adequately strong.

Stainless steel parts may have dimensional deviations. Additional information on request.

*Please add the **suffixes** below according to the material/surface required.

Order code suffixes				
Material	Suffix surface and material	Example 4 bolt flange with metr. threads	Example 4 bolt flange with UNC threads	Standard sealing material (no additional suffix needed)
Steel, blanc oil dipped	S	PGFS080BSM	PGFS080BSU	NBR
Stainless steel	SS	PGFS080BSSM	PGFS080BSSU	VIT

PAFS-90B SAE 90° 4 bolt flange (butt weld)

SAE 90° Flange / Butt weld tube end
(ISO 6162-1/-2)

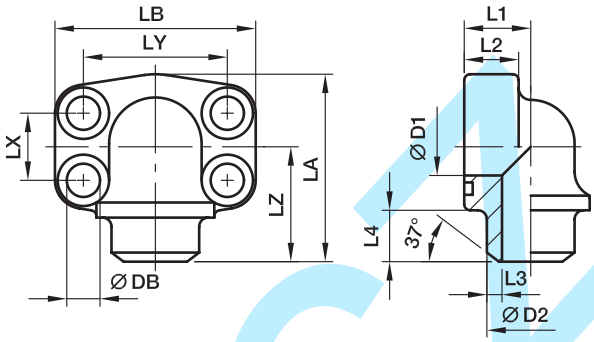

3000 PSI Series

Nom. flange size SAE (in.)	ISO (DN)	max.	D1	D2	L1	L2	L3	L4	LA	LB	LX	LY	LZ	DB	Bolts (metr.)	Bolts (unc.)	Weight (steel) kg/piece	Order code*	PN (bar)[1] S	PN (bar)[1] SS
1/2	13	21.3	13	21.6	18	16	4.3	12	63	57	17.5	38.1	40	8.9	M 08×30	5/16×1 1/4	0.31	**PAFS080/90B**	345	345
3/4	19	26.9	19	27.2	22	18	4.1	12	66	68	22.3	47.6	41	10.6	M 10×35	3/8×1 1/2	0.48	**PAFS100/90B**	345	345
1	25	33.7	25	34.5	28	19	4.7	13	77	74	26.2	52.4	50	10.6	M 10×35	3/8×1 1/2	0.72	**PAFS102/90B**	345	345
1 1/4	32	42.4	31	42.8	30	22	6.0	13	91	81	30.2	58.7	57	10.6***	M 10×40	7/16×1 1/2	1.01	**PAFS104/90B**	276	276
1 1/2	38	48.3	38	48.6	36	25	5.3	14	105	95	35.7	69.9	66	13.3	M 12×45	1/2×1 3/4	1.32	**PAFS106/90B**	207	207
2	51	60.3	50	61.0	41	25	5.5	15	110	105	42.9	77.8	66	13.3	M 12×45	1/2×1 3/4	1.74	**PAFS108/90B**	207	207
2 1/2	64	76.1	60	76.6	50	25	8.0	25	127	115	50.8	88.9	77	13.3	M 12×45	1/2×1 3/4	2.79	**PAFS110/90B**	172	172

6000 PSI Series

1/2	13	21.3	13	21.6	18	16	4.3	12	63	56	18.2	40.5	40	8.9	M 08×30	5/16×1 1/4	0.31	**PAFS401/90B**	420	420
3/4	19	26.9	18	27.2	28	20	4.6	12	77	72	23.8	50.8	50	10.6	M 10×35	3/8×1 1/2	0.76	**PAFS402/90B**	420	420
1	25	33.7	22	34.5	26	24	6.3	13	91	82	27.8	57.2	57	13.3***	M 12×45	7/16×1 1/2	0.91	**PAFS403/90B**	420	420
1 1/4	32	42.4	28	42.8	36	25	7.4	13	105	95	31.8	66.6	66	15.0**	M 14×50	1/2×1 3/4	1.65	**PAFS404/90B**	420	420
1 1/4	32	42.4	28	42.8	36	25	7.4	13	105	95	31.8	66.6	66	13.3*	M 12×50	–	1.65	**PAFS404/12/90B**	420	420
1 1/2	38	48.3	32	48.6	41	26	8.3	15	109	110	36.5	79.3	65	16.7	M 16×55	5/8×2 1/4	2.37	**PAFS405/90B**	420	420
2	51	60.3	41	61.0	45	35	10.0	15	133	134	44.5	96.8	75	20.6	M 20×70	3/4×2 3/4	4.06	**PAFS406/90B**	420	420

**DB = 13.3 for UNC Bolts
***DB = 12 for UNC Bolts
[1]) Pressure shown = Item deliverable

$$\frac{\text{PN (bar)}}{10} = \text{PN (MPa)}$$

The pressures given here are the maximum allowable for the flange fittings. If the pipe or tube used has a lower pressure rating, then the welded assembly rating will be the lower one, assuming the weld is adequately strong.

Stainless steel parts may have dimensional deviations. Additional information on request.

*Please add the **suffixes** below according to the material/surface required.

Order code suffixes					
Material	Suffix surface and material	Example only 4 bolt flange	Example 4 bolt flange incl. metr. bolts and O-ring	Example 4 bolt flange incl. UNC bolts and O-ring	Standard sealing material (no additional suffix needed)
Steel, blanc oil dipped	S	PAFS080/90BS	PAFS080/90BSM	PAFS080/90BSU	NBR
Stainless steel	SS	PAFS080/90BSS	PAFS080/90BSSM	–	VIT

PAFS-S SAE Straight 4 bolt flange (socket weld)

SAE Flange / Socket weld tube end
(ISO 6162-1/-2)

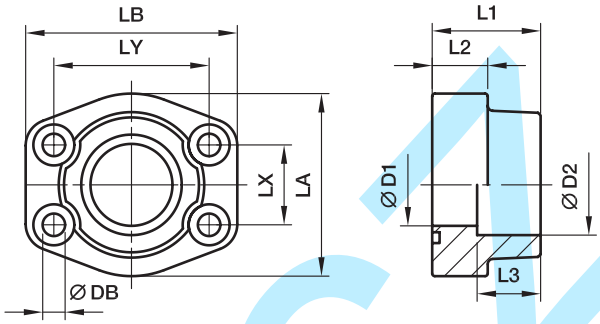

3000 PSI Series

Nom. flange size SAE (in.)	ISO (DN)	max.	D1	D2	L1	L2	L3	LA	LB	LX	LY	DB	Bolts (metr.)	Bolts (unc.)	Weight (steel) kg/piece	Order code*	PN (bar)[1] S	PN (bar)[1] SS
1/2	13	17.2	13	17.5	36	16	18	47	58	17.5	38.1	8.9	M 08×30	5/16×1 1/4	0.30	**PAFS080S17.5**	345	345
1/2	13	21.3	13	21.6	36	16	18	47	58	17.5	38.1	8.9	M 08×30	5/16×1 1/4	0.28	**PAFS080S21.6**	345	345
3/4	19	26.9	19	27.2	36	18	18	49	66	22.3	47.6	10.6	M 10×35	3/8×1 1/2	0.40	**PAFS100S27.2**	345	345
1	25	33.7	25	34.1	38	18	18	53	70	26.2	52.4	10.6	M 10×35	3/8×1 1/2	0.50	**PAFS102S34.1**	345	345
1 1/4	32	42.4	31	42.8	41	21	20	69	80	30.2	58.7	10.6***	M 10×40	7/16×1 1/2	0.72	**PAFS104S42.8**	276	276
1 1/2	38	48.3	38	48.6	44	25	22	77	94	35.7	69.9	13.3	M 12×45	1/2×1 3/4	1.08	**PAFS106S48.6**	207	207
2	51	60.3	50	61.0	45	25	24	89	103	42.9	77.8	13.3	M 12×45	1/2×1 3/4	1.16	**PAFS108S61**	207	207
2 1/2	64	76.1	63	76.6	50	25	28	101	115	50.8	88.9	13.3	M 12×45	1/2×1 3/4	1.40	**PAFS110S76.6**	172	172
3	76	88.9	73	90.5	50	27	28	124	135	61.9	106.4	16.7	M 16×55	5/8×2 1/4	2.23	**PAFS112S90.5**	138	138
3 1/2	89	101.6	89	103.0	50	27	28	137	153	69.9	120.7	16.7	M 16×55	5/8×2 1/4	2.92	**PAFS114S103**	34	34
4	102	114.3	99	115.5	50	27	28	147	163	77.8	130.2	16.7	M 16×55	5/8×2 1/4	3.05	**PAFS116S115.5**	34	34
5	127	140.0	120	142.0	50	28	28	180	184	92.1	152.4	16.7	M 16×55	5/8×2 1/4	4.21	**PAFS118S142**	34	34

6000 PSI Series

1/2	13	17.2	13	17.5	36	16	18	47	58	18.2	40.5	8.9	M 08×30	5/16×1 1/4	0.30	**PAFS401S17.5**	420	420
1/2	13	21.3	13	21.6	36	16	18	47	58	18.2	40.5	8.9	M 08×30	5/16×1 1/4	0.29	**PAFS401S21.6**	420	420
3/4	19	26.9	19	27.2	36	19	20	53	71	23.8	50.8	10.6	M 10×35	3/8×1 1/2	0.53	**PAFS402S27.2**	420	420
1	25	33.7	25	34.1	44	24	22	66	80	27.8	57.2	13.3***	M 12×45	7/16×1 1/2	0.85	**PAFS403S34.1**	420	420
1 1/4	32	42.4	31	42.8	44	27	22	77	94	31.8	66.6	15.0**	M 14×50	1/2×1 3/4	1.16	**PAFS404S42.8**	420	420
1 1/4	32	42.4	31	42.8	44	27	22	77	94	31.8	66.6	13.3	M 12×50	–	1.16	**PAFS404/12S42.8**	420	420
1 1/2	38	48.3	38	48.6	51	30	24	89	106	36.5	79.3	16.7	M 16×55	5/8×2 1/4	1.65	**PAFS405S48.6**	420	420
2	51	60.3	50	61.0	70	37	25	116	135	44.5	96.8	20.6	M 20×70	3/4×2 3/4	3.63	**PAFS406S61**	420	420
2 1/2	64	76.1	63	76.6	75	45	28	150	166	58.7	123.8	25.0	M 24×90	–	6.77	**PAFS407S76.6**	420	420
3	76	88.9	73	90.5	90	55	30	178	208	71.4	152.4	32.0	M 30×110	–	12.38	**PAFS408S90.5**	420	420

** DB = 13.3 for UNC Bolts
*** DB = 12 for UNC Bolts
[1] Pressure shown = Item deliverable

$\frac{\text{PN (bar)}}{10}$ = PN (MPa)

The pressures given here are the maximum allowable for the flange fittings. If the pipe or tube used has a lower pressure rating, then the welded assembly rating will be the lower one, assuming the weld is adequately strong.

Stainless steel parts may have dimensional deviations. Additional information on request.

*Please add the **suffixes** below according to the material/surface required.

Order code suffixes					
Material	Suffix surface and material	Example only 4 bolt flange	Example 4 bolt flange incl. metr. bolts and O-ring	Example 4 bolt flange incl. UNC bolts and O-ring	Standard sealing material (no additional suffix needed)
Steel, blanc oil dipped	S	PAFS080S17.5S	PAFS080S17.5SM	PAFS080S17.5SU	NBR
Stainless steel	SS	PAFS080S17.5SS	PAFS080S17.5SSM	–	VIT

PGFS-S SAE Straight counter 4 bolt flange (socket weld)

SAE Counter flange / Socket weld tube end
(ISO 6162-1/-2)

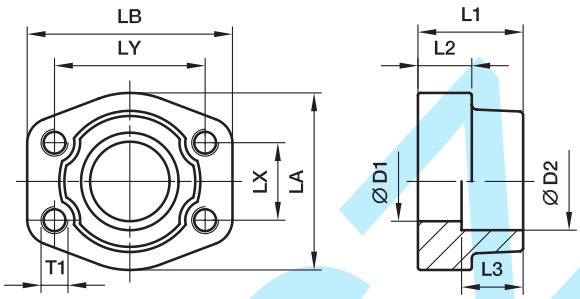

3000 PSI Series

Nom. flange size SAE (in.)	ISO (DN)	max.	D1	D2	L1	L2	L3	LA	LB	LX	LY	DB	Bolts (metr.)	Bolts (unc.)	Weight (steel) kg/piece	Order code*	PN (bar)[1] S	PN (bar)[1] SS
1/2	13	17.2	13	17.5	36	16	18	47	58	17.5	38.1	8.9	M 8	5/16	0.33	**PGFS080S17.5**	345	345
1/2	13	21.3	13	21.6	36	16	18	47	58	17.5	38.1	8.9	M 8	5/16	0.32	**PGFS080S21.6**	345	345
3/4	19	26.9	19	27.2	36	18	18	49	66	22.3	47.6	10.6	M10	3/8	0.42	**PGFS100S27.2**	345	345
1	25	33.7	25	34.1	38	18	18	53	70	26.2	52.4	10.6	M10	3/8	0.53	**PGFS102S34.1**	345	345
1 1/4	32	42.4	31	42.8	41	21	20	69	80	30.2	58.7	10.6***	M10	7/16	0.77	**PGFS104S42.8**	276	276
1 1/2	38	48.3	38	48.6	44	25	22	77	94	35.7	69.9	13.3	M12	1/2	1.14	**PGFS106S48.6**	207	207
2	51	60.3	50	61.0	45	25	24	89	103	42.9	77.8	13.3	M12	1/2	1.22	**PGFS108S61**	207	207
2 1/2	64	76.1	63	76.6	50	25	28	101	115	50.8	88.9	13.3	M12	1/2	1.50	**PGFS110S76.6**	172	172
3	76	88.9	73	90.5	50	27	28	124	135	61.9	106.4	16.7	M16	5/8	2.30	**PGFS112S90.5**	138	138
3 1/2	89	101.6	89	103.0	50	27	28	137	153	69.9	120.7	16.7	M16	5/8	2.64	**PGFS114S103**	34	34
4	102	114.3	99	115.5	50	27	28	147	163	77.8	130.2	16.7	M16	5/8	3.11	**PGFS116S115.5**	34	34
5	127	140.0	120	142.0	50	28	28	180	184	92.1	152.4	16.7	M16	5/8	4.31	**PGFS118S142**	34	34

6000 PSI Series

1/2	13	17.2	13	17.5	36	16	18	47	58	18.2	40.5	8.9	M 8	5/16	0.33	**PGFS401S17.5**	420	420
1/2	13	21.3	13	21.6	36	16	18	47	58	18.2	40.5	8.9	M 8	5/16	0.30	**PGFS401S21.6**	420	420
3/4	19	26.9	19	27.2	36	19	20	53	71	23.8	50.8	10.6	M10	3/8	0.57	**PGFS402S27.2**	420	420
1	25	33.7	25	34.1	44	24	22	66	80	27.8	57.2	13.3***	M12	7/16	0.89	**PGFS403S34.1**	420	420
1 1/4	32	42.4	31	42.8	44	27	22	77	94	31.8	66.6	15.0**	M14	1/2	1.22	**PGFS404S42.8**	420	420
1 1/4	32	42.4	31	42.8	44	27	22	77	94	31.8	66.6	13.3	M12	–	1.22	**PGFS404/12S42.8**	420	420
1 1/2	38	48.3	38	48.6	51	30	24	89	106	36.5	79.3	16.7	M16	5/8	1.78	**PGFS405S48.6**	420	420
2	51	60.3	50	61.0	70	37	25	116	135	44.5	96.8	20.6	M20	3/4	3.76	**PGFS406S61**	420	420
2 1/2	64	76.1	63	76.6	75	45	28	150	166	58.7	123.8	25.0	M24	–	7.28	**PGFS407S76.6**	420	420
3	76	88.9	73	90.5	90	55	30	178	208	71.4	152.4	30.0	M30	–	12.60	**PGFS408S90.5**	420	420

** DB = 13.3 for UNC Bolts
*** DB = 12 for UNC Bolts
[1] Pressure shown = Item deliverable

$$\frac{\text{PN (bar)}}{10} = \text{PN (MPa)}$$

The pressures given here are the maximum allowable for the flange fittings. If the pipe or tube used has a lower pressure rating, then the welded assembly rating will be the lower one, assuming the weld is adequately strong.

Stainless steel parts may have dimensional deviations. Additional information on request.

*Please add the **suffixes** below according to the material/surface required.

Order code suffixes				
Material	Suffix surface and material	Example 4 bolt flange with metr. threads	Example 4 bolt flange with UNC threads	Standard sealing material (no additional suffix needed)
Steel, blanc oil dipped	S	PGFS080S17.5SM	PGFS080S17.5SU	NBR
Stainless steel	SS	PGFS080S17.5SSM	PGFS080S17.5SSU	VIT

PAFSF-S SAE Straight 4 bolt flange flat (socket weld)

SAE Flange / Socket weld tube end
(ISO 6162-1/-2)

only for low pressure applications

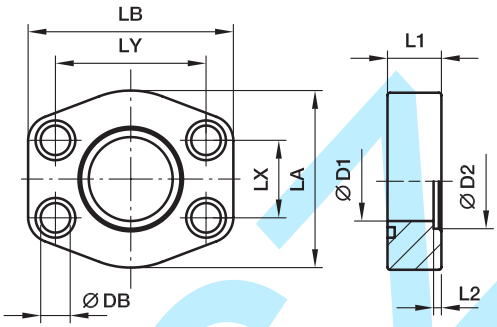

3000 PSI Series

Nom. flange size SAE (in.)	Nom. flange size ISO (DN)	max.	D1	D2	L1	L2	LA	LB	LX	LY	DB	Bolts (metr.)	Bolts (unc.)	Weight (steel) kg/piece	Order code*	PN (bar)[1] S	PN (bar)[1] SS
1/2	13	17.2	13	17.5	16	3	47	58	17.5	38.1	8.9	M 08×30	5/16×1 1/4	0.12	**PAFSF080S17.5**	40	40
1/2	13	21.3	13	21.6	16	3	47	58	17.5	38.1	8.9	M 08×30	5/16×1 1/4	0.12	**PAFSF080S21.6**	40	40
3/4	19	21.3	13	21.6	18	4	49	66	22.3	47.6	10.6	M 10×35	3/8×1 1/2	0.20	**PAFSF100S21.6**	40	40
3/4	19	26.9	19	27.2	18	4	49	66	22.3	47.6	10.6	M 10×35	3/8×1 1/2	0.20	**PAFSF100S27.2**	40	40
1	25	26.9	19	27.2	19	4	53	71	26.2	52.4	10.6	M 10×35	3/8×1 1/2	0.38	**PAFSF102S27.2**	40	40
1	25	33.7	25	34.5	19	4	53	71	26.2	52.4	10.6	M 10×35	3/8×1 1/2	0.35	**PAFSF102S34.5**	40	40
1 1/4	32	33.7	25	34.5	21	4	69	80	30.2	58.7	10.6***	M 10×40	7/16×1 1/2	0.40	**PAFSF104S34.5**	40	40
1 1/4	32	42.4	31	42.8	21	4	69	80	30.2	58.7	10.6***	M 10×40	7/16×1 1/2	0.56	**PAFSF104S42.8**	40	40
1 1/2	38	42.4	31	42.8	25	4	77	95	35.7	69.9	13.3	M 12×45	1/2×1 3/4	0.94	**PAFSF106S42.8**	40	40
1 1/2	38	48.3	38	48.6	25	4	77	95	35.7	69.9	13.3	M 12×45	1/2×1 3/4	0.88	**PAFSF106S48.6**	40	40
2	51	48.3	38	48.6	25	4	89	103	42.9	77.8	13.3	M 12×45	1/2×1 3/4	1.08	**PAFSF108S48.6**	40	40
2	51	60.3	50	61.0	25	4	89	103	42.9	77.8	13.3	M 12×45	1/2×1 3/4	0.95	**PAFSF108S61.0**	40	40
2 1/2	64	60.3	50	61.0	25	5	101	116	50.8	88.9	13.3	M 12×45	1/2×1 3/4	1.41	**PAFSF110S61.0**	40	40
2 1/2	64	76.1	63	76.6	25	5	101	116	50.8	88.9	13.3	M 12×45	1/2×1 3/4	1.39	**PAFSF110S76.6**	40	40
3	76	76.1	63	76.6	27	5	124	136	61.9	106.4	16.7	M 16×55	5/8×2 1/4	2.12	**PAFSF112S76.6**	30	30
3	76	88.9	73	90.5	27	5	124	136	61.9	106.4	16.7	M 16×55	5/8×2 1/4	1.85	**PAFSF112S90.5**	30	30
3 1/2	89	88.9	73	90.5	27	5	136	152	69.9	120.7	16.7	M 16×55	5/8×2 1/4	2.75	**PAFSF114S90.5**	30	30
3 1/2	89	101.6	89	103.0	27	5	136	152	69.9	120.7	16.7	M 16×55	5/8×2 1/4	2.30	**PAFSF114S103**	30	30
4	102	101.6	89	103.0	27	6	146	162	77.8	130.2	16.7	M 16×55	5/8×2 1/4	2.89	**PAFSF116S103**	30	30
4	102	114.3	99	115.5	24	6	146	162	77.8	130.2	16.7	M 16×55	5/8×2 1/4	2.62	**PAFSF116S115.5**	30	30
5	127	114.3	99	115.5	28	6	180	184	92.1	152.4	16.7	M 16×55	5/8×2 1/4	3.50	**PAFSF118S115.5**	30	30
5	127	140.0	120	142.5	28	6	180	184	92.1	152.4	16.7	M 16×55	5/8×2 1/4	3.42	**PAFSF118S142.5**	30	30
6000 PSI Series																	
1/2	13	17.2	13	17.5	16	4	47	58	18.2	40.5	8.9	M 08×30	5/16×1 1/4	0.25	**PAFSF401S17.5**	40	40
1/2	13	21.3	13	21.6	16	4	47	58	18.2	40.5	8.9	M 08×30	5/16×1 1/4	0.25	**PAFSF401S21.6**	40	40
3/4	19	21.3	13	21.6	19	4	53	71	23.8	50.8	10.6	M 10×35	3/8×1 1/2	0.50	**PAFSF402S21.6**	40	40
3/4	19	26.9	19	27.2	19	4	53	71	23.8	50.8	10.6	M 10×35	3/8×1 1/2	0.50	**PAFSF402S27.2**	40	40
1	25	26.9	19	27.2	24	4	66	80	27.8	57.2	13.3***	M 12×45	7/16×1 1/2	0.73	**PAFSF403S27.2**	40	40
1	25	33.7	25	34.5	24	4	66	80	27.8	57.2	13.3***	M 12×45	7/16×1 1/2	0.68	**PAFSF403S34.5**	40	40
1 1/4	32	33.7	25	34.5	27	4	77	94	31.8	66.6	15.0**	M 14×50	1/2×1 3/4	1.40	**PAFSF404S34.5**	40	40
1 1/4	32	33.7	25	34.5	27	4	77	94	31.8	66.6	13.3	M 12×50	–	1.40	**PAFSF404/12S34.5**	40	40
1 1/4	32	42.4	31	42.8	27	4	77	94	31.8	66.6	15.0**	M 14×50	1/2×1 3/4	1.35	**PAFSF404S42.8**	40	40
1 1/4	32	42.4	31	42.8	27	4	77	94	31.8	66.6	13.3	M 12×50	–	1.35	**PAFSF404/12S42.8**	40	40
1 1/2	38	42.4	31	42.8	30	4	89	103	36.5	79.3	16.7	M 16×55	5/8×2 1/4	1.30	**PAFSF405S42.8**	40	40
1 1/2	38	48.3	38	48.6	30	4	89	103	36.5	79.3	16.7	M 16×55	5/8×2 1/4	1.27	**PAFSF405S48.6**	40	40
2	51	48.3	38	48.6	37	4	123	135	44.5	96.8	20.6	M 20×70	3/4×2 3/4	3.03	**PAFSF406S48.6**	40	40
2	51	60.3	50	61.0	37	4	123	135	44.5	96.8	20.6	M 20×70	3/4×2 3/4	2.89	**PAFSF406S61.0**	40	40

The pressures given here are the maximum allowable for the flange fittings. If the pipe or tube used has a lower pressure rating, then the welded assembly rating will be the lower one, assuming the weld is adequately strong.

**DB = 13.3 for UNC Bolts
***DB = 12 for UNC Bolts
[1]) Pressure shown = Item deliverable

*Please add the **suffixes** below according to the material/surface required.

Order code suffixes					
Material	Suffix surface and material	Example only 4 bolt flange	Example 4 bolt flange incl. metr. bolts and O-ring	Example 4 bolt flange incl. UNC bolts and O-ring	Standard sealing material (no additional suffix needed)
Steel, blanc oil dipped	S	PAFSF080S17.5S	PAFSF080S17.5SM	PAFSF080S17.5SU	NBR
Stainless steel	SS	PAFSF080S17.5SS	PAFSF080S17.5SSM	–	VIT

$$\frac{\text{PN (bar)}}{10} = \text{PN (MPa)}$$

Stainless steel parts may have dimensional deviations. Additional information on request.

PAFS-90S SAE 90° 4 bolt flange (socket weld)

SAE 90° Flange / Socket weld tube end
(ISO 6162-1/-2)

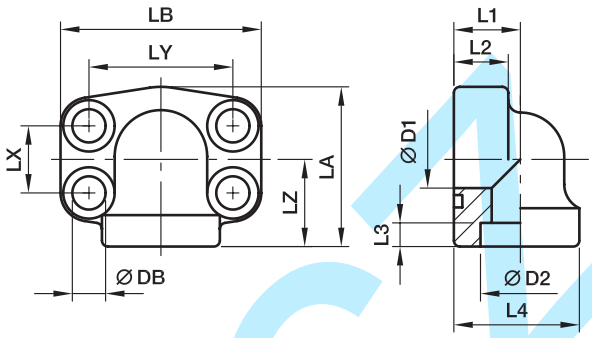

3000 PSI Series

Nom. flange size SAE (in.)	Nom. flange size ISO (DN)	max.	D1	D2	L1	L2	L3	L4	LA	LB	LX	LY	LZ	DB	Bolts (metr.)	Bolts (unc.)	Weight (steel) kg/piece	Order code*	PN (bar)[1] S	PN (bar)[1] SS
1/2	13	21.3	13	21.6	18	17	5	34.0	51	57	17.5	38.1	28	8.9	M 08×30	5/16×1 1/4	0.45	**PAFS080/90S21.6**	345	345
3/4	19	26.9	19	27.2	22	18	5	38.5	50	68	22.2	47.6	25	10.6	M 10×35	3/8×1 1/2	0.50	**PAFS100/90S27.2**	345	345
1	25	33.7	25	34.1	28	19	6	44.5	55	72	26.2	52.4	28	10.6	M 10×35	3/8×1 1/2	0.55	**PAFS102/90S34.1**	345	345
1 1/4	32	42.4	31	42.8	30	22	7	53.5	68	82	30.2	58.7	34	10.6***	M 10×40	7/16×1 1/2	0.88	**PAFS104/90S42.8**	276	276
1 1/2	38	48.3	38	48.6	36	25	8	62.5	82	95	35.7	69.9	43	13.3	M 12×45	1/2×1 3/4	1.28	**PAFS106/90S48.6**	207	207
2	51	60.3	50	61.0	41	25	10	77.0	94	105	42.9	77.8	50	13.3	M 12×45	1/2×1 3/4	1.72	**PAFS108/90S61**	207	207
2 1/2	64	76.1	60	76.6	50	25	28	85.0	127	115	50.8	88.9	77	13.3	M 12×45	1/2×1 3/4	3.11	**PAFS110/90S76.6**	172	172

6000 PSI Series

1/2	13	21.3	13	21.6	18	17	5	34.0	51	57	18.2	40.5	28	8.9	M 08×30	5/16×1 1/4	0.35	**PAFS401/90S21.6**	420	420
3/4	19	26.9	19	27.2	28	19	6	44.5	55	72	23.8	50.8	28	10.6	M 10×35	3/8×1 1/2	0.76	**PAFS402/90S27.2**	420	420
1	25	33.7	25	34.1	30	24	7	53.5	68	82	27.8	57.2	34	13.3***	M 12×50	7/16×1 1/2	0.96	**PAFS403/90S34.1**	420	420
1 1/4	32	42.4	31	42.8	36	25	8	62.5	82	95	31.8	66.6	43	15.0**	M 14×45	1/2×1 3/4	1.77	**PAFS404/90S42.8**	420	420
1 1/4	32	42.4	31	42.8	36	25	8	62.5	82	95	31.8	66.6	43	13.3	M 12×45	–	1.77	**PAFS404/12/90S42.8**	420	420
1 1/2	38	48.3	38	48.6	41	26	10	77.0	94	110	36.5	79.3	50	16.7	M 16×55	5/8×2 1/4	2.24	**PAFS405/90S48.6**	420	420
2	51	60.3	50	61.0	45	35	12	89.0	123	134	44.5	96.8	65	20.6	M 20×70	3/4×2 3/4	3.48	**PAFS406/90S61**	420	420

** DB = 13.3 for UNC Bolts
*** DB = 12 for UNC Bolts
[1] Pressure shown = Item deliverable

$$\frac{\text{PN (bar)}}{10} = \text{PN (MPa)}$$

The pressures given here are the maximum allowable for the flange fittings. If the pipe or tube used has a lower pressure rating, then the welded assembly rating will be the lower one, assuming the weld is adequately strong.

Stainless steel parts may have dimensional deviations. Additional information on request.

*Please add the **suffixes** below according to the material/surface required.

Order code suffixes					
Material	Suffix surface and material	Example only 4 bolt flange	Example 4 bolt flange incl. metr. bolts and O-ring	Example 4 bolt flange incl. UNC bolts and O-ring	Standard sealing material (no additional suffix needed)
Steel, blanc oil dipped	S	PAFS080/90S21.6S	PAFS080/90S21.6SM	PAFS080/90S21.6SU	NBR
Stainless steel	SS	PAFS080/90S21.6SS	PAFS080/90S21.6SSM	–	VIT

PDFS-G SAE Straight 4 bolt flange connection

SAE Flange (ISO 6162-1/-2) / Female BSPP thread (ISO 1179-1)

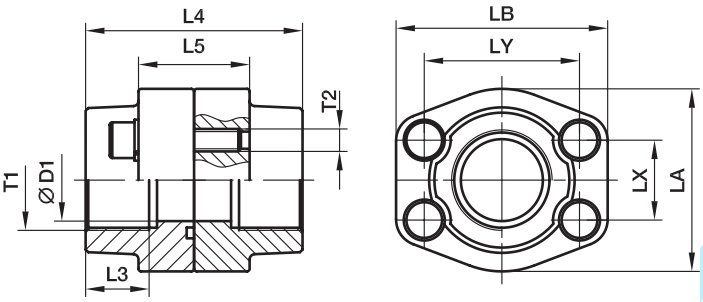

3000 PSI Series

Nom. flange size SAE (in.)	Nom. flange size ISO (DN)	T1	D1	L3	L4	L5	LA	LB	LX	LY	T2 (metr.)	T2 (unc.)	Weight (steel) kg/piece	Order code*	PN (bar)[1] S	PN (bar)[1] SS
1/2	13	**G 3/8**	13	19	72	32	47	57	17.5	38.1	M 8	5/16	0.71	**PDFS080G38**	345	345
1/2	13	**G 1/2**	13	19	72	32	47	57	17.5	38.1	M 8	5/16	0.67	**PDFS080G**	345	345
3/4	19	**G 3/4**	19	19	72	36	49	66	22.3	47.6	M10	3/8	0.97	**PDFS100G**	345	345
1	25	**G 1**	25	19	76	36	53	71	26.2	52.4	M10	3/8	1.13	**PDFS102G**	345	345
1 1/4	32	**G 1 1/4**	31	22	82	42	69	80	30.2	58.7	M10	7/16	1.63	**PDFS104G**	276	276
1 1/2	38	**G 1 1/2**	38	24	88	48	77	94	35.7	69.9	M12	1/2	2.49	**PDFS106G**	207	207
2	51	**G 2**	50	26	90	48	89	103	42.9	77.8	M12	1/2	2.68	**PDFS108G**	207	207
2 1/2	64	**G 2 1/2**	63	30	100	48	101	115	50.8	88.9	M12	1/2	3.22	**PDFS110G**	172	172
3	76	**G 3**	73	34	100	53	124	135	61.9	106.4	M16	5/8	3.10	**PDFS112G**	138	138
3 1/2	89	**G 3 1/2**	89	27	100	54	136	152	69.9	120.7	M16	5/8	4.20	**PDFS114G**	34	34
4	102	**G 4**	99	30	100	54	146	162	77.8	130.2	M16	5/8	6.76	**PDFS116G**	34	34
5	127	**G 5**	120	30	100	54	180	184	92.1	152.4	M16	5/8	7.00	**PDFS118G**	34	34

6000 PSI Series

1/2	13	**G 3/8**	13	19	72	32	47	57	18.2	40.5	M 8	5/16	0.68	**PDFS401G38**	420	420
1/2	13	**G 1/2**	13	19	72	32	47	57	18.2	40.5	M 8	5/16	0.68	**PDFS401G**	420	420
3/4	19	**G 3/4**	19	22	72	38	53	71	23.8	50.8	M10	3/8	1.23	**PDFS402G**	420	420
1	25	**G 1**	25	24	88	48	69	80	27.8	57.2	M12	7/16	1.98	**PDFS403G**	420	420
1 1/4	32	**G 1 1/4**	31	25	88	54	77	94	31.8	66.6	M14	1/2	2.71	**PDFS404G**	420	420
1 1/4	32	**G 1 1/4**	31	25	88	54	77	94	31.8	66.6	M12	–	2.71	**PDFS404/12G**	420	420
1 1/2	38	**G 1 1/2**	38	28	102	60	89	106	36.5	79.3	M16	5/8	4.25	**PDFS405G**	420	420
2	51	**G 2**	50	33	140	74	116	135	44.5	96.8	M20	3/4	8.10	**PDFS406G**	420	420
2 1/2	64	**G 2 1/2**	63	35	150	90	150	166	58.7	123.8	M24	–	15.66	**PDFS407G**	420	420
3	76	**G 3**	73	40	180	110	178	208	71.4	152.4	M30	–	20.00	**PDFS408G**	420	420

[1] Pressure shown = Item deliverable

$\frac{\text{PN (bar)}}{10}$ = PN (MPa)

Stainless steel parts may have dimensional deviations. Additional information on request.

*Please add the **suffixes** below according to the material/surface required.

Order code suffixes				
Material	Suffix surface and material	Example 4 bolt flange coupling incl. metr. bolts and O-ring	Example 4 bolt flange coupling incl. UNC bolts and O-ring	Standard sealing material (no additional suffix needed)
Steel, zinc plated, Cr(VI)-free	CF	PDFS080GCF	PDFS080GCFU	NBR
Stainless steel	SS	PDFS080GSS	–	VIT

PDFS-B SAE Straight 4 bolt flange connection (butt weld)

SAE Flange / Butt weld tube end
(ISO 6162-1/-2)

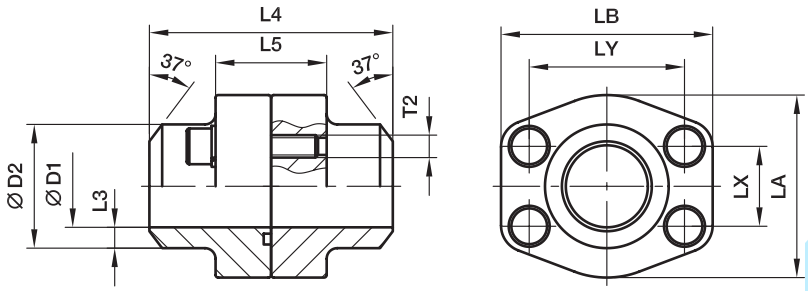

3000 PSI Series

Nom. flange size SAE (in.)	ISO (DN)	max.	D1	D2	L3	L4	L5	LA	LB	LX	LY	T2 (metr.)	T2 (unc.)	Weight (steel) kg/piece	Order code*	PN (bar)[1] S	PN (bar)[1] SS
1/2	13	21.3	13	21.6	4.3	72	32	47	57	17.5	38.1	M 8	5/16	0.64	**PDFS080B**	345	345
3/4	19	26.9	19	27.2	4.1	72	36	49	66	22.3	47.6	M10	3/8	0.85	**PDFS100B**	345	345
1	25	33.7	25	34.5	4.7	76	36	53	71	26.2	52.4	M10	3/8	1.05	**PDFS102B**	345	345
1 1/4	32	42.4	31	42.8	6.0	82	42	69	80	30.2	58.7	M10	7/16	1.55	**PDFS104B**	276	276
1 1/2	38	48.3	38	48.6	5.3	88	48	77	94	35.7	69.9	M12	1/2	2.31	**PDFS106B**	207	207
2	51	60.3	50	61.0	5.5	90	48	89	103	42.9	77.8	M12	1/2	2.64	**PDFS108B**	207	207
2 1/2	64	76.1	63	76.6	6.8	100	48	101	115	50.8	88.9	M12	1/2	3.32	**PDFS110B**	172	172
3	76	88.9	73	89.0	8.0	100	53	124	135	61.9	106.4	M16	5/8	5.18	**PDFS112B**	138	138
3 1/2	89	101.6	89	103.0	7.0	100	54	137	153	69.9	120.7	M16	5/8	6.00	**PDFS114B**	34	34
4	102	114.3	99	115.0	8.0	100	54	147	163	77.8	130.2	M16	5/8	7.31	**PDFS116B**	34	34
5	127	140.0	120	141.0	10.5	100	54	180	184	92.1	152.4	M16	5/8	9.18	**PDFS118B**	34	34

6000 PSI Series

1/2	13	17.2	10	17.5	3.7	72	32	47	57	18.2	40.5	M 8	5/16	0.63	**PDFS401B38**	420	420
1/2	13	21.3	13	21.6	4.3	72	32	47	57	18.2	40.5	M 8	5/16	0.64	**PDFS401B**	420	420
3/4	19	26.9	18	27.2	4.6	72	38	53	71	23.8	50.8	M10	3/8	1.34	**PDFS402B**	420	420
1	25	33.7	22	34.5	6.3	88	48	66	80	27.8	57.2	M12	7/16	1.86	**PDFS403B**	420	420
1 1/4	32	42.4	28	42.8	7.4	88	54	77	94	31.8	66.5	M14	1/2	2.81	**PDFS404B**	420	420
1 1/4	32	42.4	28	42.8	7.4	88	54	77	94	31.8	66.5	M12	–	2.81	**PDFS404/12B**	420	420
1 1/2	38	48.3	32	48.6	8.3	102	60	89	106	36.5	79.3	M16	5/8	3.84	**PDFS405B**	420	420
2	51	60.3	41	61.0	10.0	140	74	116	135	44.5	96.8	M20	3/4	8.10	**PDFS406B**	420	420
2 1/2	64	76.1	50	76.6	13.0	150	90	150	166	58.7	123.8	M24	–	14.72	**PDFS407B**	420	420
3	76	88.9	58	90.0	16.0	180	110	178	208	71.4	152.4	M30	–	27.80	**PDFS408B**	420	420

[1]) Pressure shown = Item deliverable

$$\frac{\text{PN (bar)}}{10} = \text{PN (MPa)}$$

The pressures given here are the maximum allowable for the flange fittings. If the pipe or tube used has a lower pressure rating, then the welded assembly rating will be the lower one, assuming the weld is adequately strong.

Stainless steel parts may have dimensional deviations. Additional information on request.

*Please add the **suffixes** below according to the material/surface required.

Order code suffixes				
Material	Suffix surface and material	Example 4 bolt flange coupling incl. metr. bolts and O-ring	Example 4 bolt flange coupling incl. UNC bolts and O-ring	Standard sealing material (no additional suffix needed)
Steel, blanc oil dipped	S	PDFS080BS	PDFS080BSU	NBR
Stainless steel	SS	PDFS080BSS	–	VIT

PDFS-S SAE Straight 4 bolt flange connection (socket weld)

SAE Flange / Socket weld tube end
(ISO 6162-1/-2)

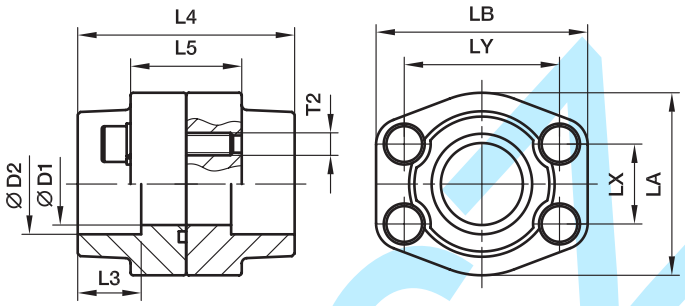

3000 PSI Series

Nom. flange size SAE (in.)	ISO (DN)	max.	D1	D2	L3	L4	L5	LA	LB	LX	LY	T2 (metr.)	T2 (unc.)	Weight (steel) kg/piece	Order code*	PN (bar)[1] S	PN (bar)[1] SS
1/2	13	17.2	13	17.5	18	72	36	47	57	17.5	38.1	M 8	5/16	0.70	**PDFS080S17.5**	345	345
1/2	13	21.3	13	21.6	18	72	36	47	57	17.5	38.1	M 8	5/16	0.67	**PDFS080S21.6**	345	345
3/4	19	26.9	19	27.2	18	72	36	49	66	22.3	47.6	M10	3/8	1.00	**PDFS100S27.2**	345	345
1	25	33.7	25	34.1	18	76	36	53	71	26.2	52.4	M10	3/8	1.13	**PDFS102S34.1**	345	345
1 1/4	32	42.4	31	42.8	20	82	42	69	80	30.2	58.7	M10	7/16	1.63	**PDFS104S42.8**	276	276
1 1/2	38	48.3	38	48.6	22	88	48	77	94	35.7	69.9	M12	1/2	2.47	**PDFS106S48.6**	207	207
2	51	60.3	50	61.0	24	90	48	89	103	42.9	77.8	M12	1/2	2.60	**PDFS108S61**	207	207
2 1/2	64	76.1	63	76.6	28	100	48	101	116	50.8	88.9	M12	1/2	3.21	**PDFS110S76.6**	172	172
3	76	88.9	73	90.5	28	100	53	124	135	61.9	106.4	M16	5/8	5.08	**PDFS112S90.5**	138	138
3 1/2	89	101.6	89	103.0	28	100	54	137	153	69.9	120.7	M16	5/8	5.91	**PDFS114S103**	34	34
4	102	114.3	99	115.5	28	100	54	147	163	77.8	130.2	M16	5/8	6.50	**PDFS116S115.5**	34	34
5	127	140.0	120	142.0	28	100	54	180	184	92.1	152.4	M16	5/8	8.62	**PDFS118S142**	34	34

6000 PSI Series

1/2	13	17.2	13	17.5	18	72	32	47	57	18.2	40.5	M 8	5/16	0.66	**PDFS401S17.5**	420	420
1/2	13	21.3	13	21.6	18	72	32	47	57	18.2	40.5	M 8	5/16	0.60	**PDFS401S21.6**	420	420
3/4	19	26.9	19	27.2	20	72	38	53	71	23.8	50.8	M10	3/8	1.14	**PDFS402S27.2**	420	420
1	25	33.7	25	34.1	22	88	48	66	80	27.8	57.2	M12	7/16	1.78	**PDFS403S34.1**	420	420
1 1/4	32	42.4	31	42.8	22	88	54	77	94	31.8	66.6	M14	1/2	2.44	**PDFS404S42.8**	420	420
1 1/4	32	42.4	31	42.8	22	88	54	77	94	31.8	66.6	M12	–	2.44	**PDFS404/12S42.8**	420	420
1 1/2	38	48.3	38	48.6	24	102	60	89	106	36.5	79.3	M16	5/8	3.54	**PDFS405S48.6**	420	420
2	51	60.3	50	61.0	25	140	74	116	135	44.5	96.8	M20	3/4	7.52	**PDFS406S61**	420	420
2 1/2	64	76.1	63	76.6	28	150	90	150	166	58.7	123.8	M24	–	14.56	**PDFS407S76.6**	420	420
3	76	88.9	73	90.5	30	180	110	178	208	71.4	152.4	M30	–	25.20	**PDFS408S90.5**	420	420

[1] Pressure shown = Item deliverable

$\frac{\text{PN (bar)}}{10}$ = PN (MPa)

The pressures given here are the maximum allowable for the flange fittings. If the pipe or tube used has a lower pressure rating, then the welded assembly rating will be the lower one, assuming the weld is adequately strong.

Stainless steel parts may have dimensional deviations. Additional information on request.

*Please add the **suffixes** below according to the material/surface required.

Order code suffixes				
Material	Suffix surface and material	Example 4 bolt flange coupling incl. metr. bolts and O-ring	Example 4 bolt flange coupling incl. UNC bolts and O-ring	Standard sealing material (no additional suffix needed)
Steel, blanc oil dipped	S	PDFS080S17.5S	PDFS080S17.5SU	NBR
Stainless steel	SS	PDFS080S17.5SS	–	VIT

PCFF SAE Closed flange

SAE Closed flange
(ISO 6162-1/-2)

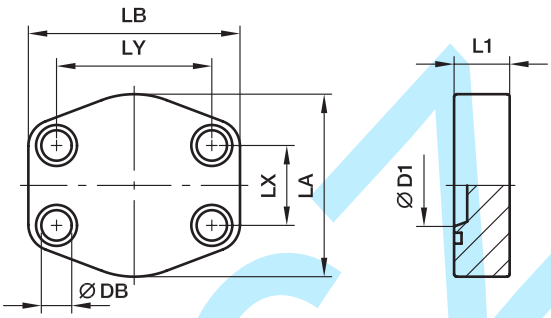

3000 PSI Series

Nom. flange size SAE (in.)	Nom. flange size ISO (DN)	D1	L1	LA	LB	LX	LY	DB	Bolts (metr.)	Bolts (unc.)	Weight (steel) kg/piece	Order code*	PN (bar)[1] S	PN (bar)[1] SS
1/2	13	13	16	47	58	17.5	38.1	8.9	M 08×30	5/16×1 1/4	0.25	**PCFF32**	345	345
3/4	19	16	18	49	66	22.3	47.6	10.6	M 10×35	3/8×1 1/2	0.36	**PCFF33**	345	345
1	25	25	19	53	71	26.2	52.4	10.6	M 10×35	3/8×1 1/2	0.43	**PCFF34**	345	345
1 1/4	32	25	21	69	80	30.2	58.7	10.6***	M 10×40	7/16×1 1/2	0.71	**PCFF35**	276	276
1 1/2	38	34	25	77	95	35.7	69.9	13.3	M 12×45	1/2×1 3/4	1.11	**PCFF36**	207	207
2	51	43	25	89	103	42.9	77.8	13.3	M 12×45	1/2×1 3/4	1.38	**PCFF38**	207	207
2 1/2	64	61	25	101	116	50.8	88.9	13.3	M 12×45	1/2×1 3/4	1.77	**PCFF310**	172	172
3	76	60	27	124	136	61.9	106.4	16.7	M 16×55	5/8×2 1/4	2.72	**PCFF312**	138	138
3 1/2	89	73	27	136	152	69.9	120.7	16.7	M 16×55	5/8×2 1/4	3.77	**PCFF314**	34	34
4	102	87	27	146	162	77.8	130.2	16.7	M 16×55	5/8×2 1/4	4.20	**PCFF316**	34	34
5	127	127	25	180	184	92.1	152.4	16.7	M 16×55	5/8×2 1/4	6.42	**PCFF320**	34	34

6000 PSI Series

1/2	13	13	16	47	58	18.2	40.5	8.9	M 08×30	5/16×1 1/4	0.25	**PCFF62**	420	420
3/4	19	20	19	53	71	23.8	50.8	10.6	M 10×35	3/8×1 1/2	0.46	**PCFF63**	420	420
1	25	25	24	66	80	27.8	57.2	13.3***	M 12×45	7/16×1 1/2	0.78	**PCFF64**	420	420
1 1/4	32	25	27	77	94	31.8	66.6	15.0**	M 14×50	1/2×1 3/4	1.17	**PCFF65**	420	420
1 1/4	32	25	27	77	94	31.8	66.6	13.3	M 12×50	–	1.17	**PCFF65/12**	420	420
1 1/2	38	34	30	89	107	36.5	79.3	16.7	M 16×55	5/8×2 1/4	1.62	**PCFF66**	420	420
2	51	46	37	116	135	44.5	96.8	20.6	M 20×70	3/4×2 3/4	3.40	**PCFF68**	420	420
2 1/2	64	56	45	150	166	58.7	123.8	25.0	M 24×90	–	6.77	**PCFF610**	420	420
3	76	81	55	178	208	71.4	152.4	32.0	M 30×110	–	12.36	**PCFF612**	420	420

** DB = 13.3 for UNC Bolts
*** DB = 12 for UNC Bolts
[1]) Pressure shown = Item deliverable

$\frac{\text{PN (bar)}}{10}$ = PN (MPa)

Stainless steel parts may have dimensional deviations. Additional information on request.

*Please add the **suffixes** below according to the material/surface required.

Order code suffixes					
Material	Suffix surface and material	Example only closed flange	Example closed flange incl. metr. bolts and O-ring	Example closed flange incl. UNC bolts and O-ring	Standard sealing material (no additional suffix needed)
Steel, zinc plated, Cr(VI)-free	CF	PCFF32CF	PCFF32CFM	PCFF32CFU	NBR
Stainless steel	SS	PCFF32SS	PCFF32SSM	–	VIT

KOVACS

PCCFF SAE Closed counter flange

SAE Closed counter flange
(ISO 6162-1/-2)

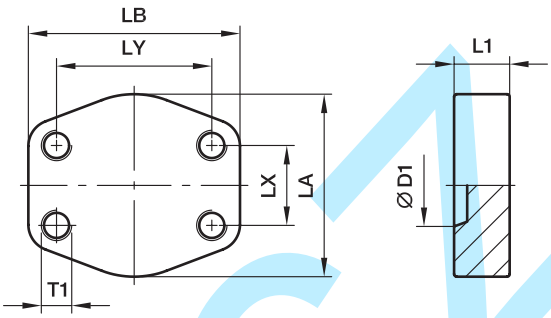

3000 PSI Series

Nom. flange size								T1		Weight (steel)		PN (bar)[1]	
SAE (in.)	ISO (DN)	D1	L1	LA	LB	LX	LY	(metr.)	(unc.)	kg/piece	Order code*	S	SS
1/2	13	13	16	47	58	17.5	38.1	M 8	5/16	0.26	**PCCFF32**	345	345
3/4	19	16	18	49	66	22.3	47.6	M10	3/8	0.37	**PCCFF33**	345	345
1	25	25	19	53	71	26.2	52.4	M10	3/8	0.45	**PCCFF34**	345	345
1 1/4	32	25	21	69	80	30.2	58.7	M10	7/16	0.73	**PCCFF35**	276	276
1 1/2	38	34	25	77	95	35.7	69.9	M12	1/2	1.50	**PCCFF36**	207	207
2	51	43	25	89	103	42.9	77.8	M12	1/2	1.40	**PCCFF38**	207	207
2 1/2	64	61	25	101	116	50.8	88.9	M12	1/2	1.83	**PCCFF310**	172	172
3	76	60	27	124	136	61.9	106.4	M16	5/8	2.80	**PCCFF312**	138	138
3 1/2	89	73	27	136	152	69.9	120.7	M16	5/8	3.68	**PCCFF314**	34	34
4	102	87	27	146	162	77.8	130.2	M16	5/8	4.10	**PCCFF316**	34	34
5	127	127	25	180	184	92.1	152.4	M16	5/8	6.40	**PCCFF320**	34	34

6000 PSI Series

1/2	13	13	16	47	58	18.2	40.5	M 8	5/16	0.30	**PCCFF62**	420	420
3/4	19	20	19	53	71	23.8	50.8	M10	3/8	0.49	**PCCFF63**	420	420
1	25	25	24	66	80	27.8	57.2	M12	7/16	0.82	**PCCFF64**	420	420
1 1/4	32	25	27	77	94	31.8	66.6	M14	1/2	1.22	**PCCFF65**	420	420
1 1/4	32	25	27	77	94	31.8	66.6	M12	–	1.22	**PCCFF65/12**	420	420
1 1/2	38	34	30	89	103	36.5	79.3	M16	5/8	1.69	**PCCFF66**	420	420
2	51	46	37	123	135	44.5	96.8	M20	3/4	3.48	**PCCFF68**	420	420
2 1/2	64	56	45	150	166	58.7	123.8	M24	–	7.08	**PCCFF610**	420	420
3	76	71	55	178	208	71.4	152.4	M30	–	12.67	**PCCFF612**	420	420

[1]) Pressure shown = Item deliverable

$\frac{\text{PN (bar)}}{10}$ = PN (MPa)

Stainless steel parts may have dimensional deviations. Additional information on request.

*Please add the **suffixes** below according to the material/surface required.

Order code suffixes				
Material	Suffix surface and material	Example closed flange with metr. threads	Example closed flange with UNC threads	Standard sealing material (no additional suffix needed)
Steel, zinc plated, Cr(VI)-free	CF	PCCF32CFM	PCCFF32CFU	NBR
Stainless steel	SS	PCCFF32SSM	PCCFF32SSU	VIT

CPM SAE Flange connector plate

ISO 6162-1/-2

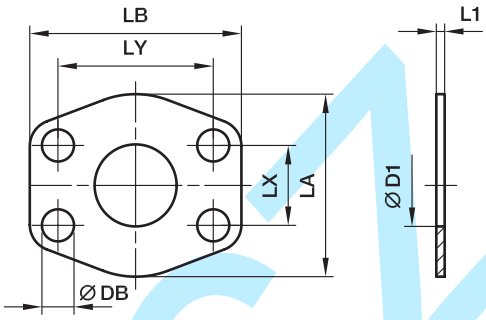

3000 PSI Series

Nom. flange size SAE (in.)	Nom. flange size ISO (DN)	D1	L1	LA	LB	LX	LY	DB	Weight (steel) kg/piece	Order code*	PN (bar)[1] CF	PN (bar)[1] SS
1/2	13	13	3	47	57	17.5	38.1	9.0	0.05	**8CPM1**	345	345
3/4	19	19	3	49	66	22.3	47.6	11.0	0.05	**12CPM1**	345	345
1	25	25	3	53	71	26.2	52.4	11.0	0.07	**16CPM1**	345	345
1 1/4	32	32	3	69	80	30.2	58.7	11.5	0.09	**20CPM1**	276	276
1 1/2	38	38	3	77	95	35.7	69.9	13.5	0.12	**24CPM1**	207	207
2	51	51	3	89	103	42.9	77.8	13.5	0.13	**32CPM1**	207	207
2 1/2	64	63	3	101	116	50.8	88.9	13.5	0.15	**40CPM1**	172	172
3	76	73	4	124	136	61.9	106.4	17.0	0.29	**48CPM1**	138	138
3 1/2	89	89	4	136	152	69.9	120.7	17.0	0.34	**56CPM1**	34	34
4	102	99	4	146	162	77.8	130.2	17.0	0.46	**64CPM1**	34	34
5	127	120	4	180	184	92.1	152.4	17.0	0.50	**80CPM1**	34	34

6000 PSI Series

1/2	13	13	4	47	57	18.2	40.5	9.0	0.08	**8CPM2**	420	420
3/4	19	17	4	53	71	23.8	50.8	11.0	0.11	**12CPM2**	420	420
1	25	24	4	66	80	27.8	57.2	13.0	0.14	**16CPM2**	420	420
1 1/4	32	31	4	77	94	31.8	66.6	15.0	0.20	**20CPM2**	420	420
1 1/2	38	38	4	89	103	36.5	79.3	17.0	0.24	**24CPM2**	420	420
2	51	51	4	123	135	44.5	96.8	21.0	0.30	**32CPM2**	420	420
2 1/2	64	63	4	150	166	58.7	123.8	25.0	0.50	**40CPM2**	420	420
3	76	73	4	178	208	71.4	152.4	32.0	0.73	**48CPM2**	420	420

[1]) Pressure shown = Item deliverable

$\frac{\text{PN (bar)}}{10}$ = PN (MPa)

Stainless steel parts may have dimensional deviations. Additional information on request.

*Please add the **suffixes** below according to the material/surface required.

Order code suffixes			
Material	Suffix surface and material	Example	Description
Steel, zinc plated, Cr(VI)-free	CF	8CPM1CF	only connector plate
Stainless steel	SS	8CPM1SS	only connector plate

AP SAE Flange locking plate

ISO 6162-1/-2

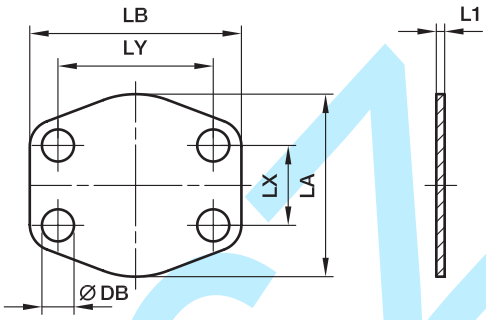

3000 PSI Series

Nom. flange size SAE (in.)	Nom. flange size ISO (DN)	L1	LA	LB	LX	LY	DB	Weight (steel) kg/piece	Order code*	PN (bar) CF	PN (bar) SS
1/2	13	3	47	57	17.5	38.1	9.0	0.05	**8AP1**	–	–
3/4	19	3	49	66	22.3	47.6	11.0	0.06	**12AP1**	–	–
1	25	3	59	71	26.2	52.4	11.0	0.07	**16AP1**	–	–
1 1/4	32	3	69	80	30.2	58.7	11.5	0.10	**20AP1**	–	–
1 1/2	38	3	77	95	35.7	69.9	13.5	0.15	**24AP1**	–	–
2	51	3	97	103	42.9	77.8	13.5	0.19	**32AP1**	–	–
2 1/2	64	3	109	116	50.8	89.9	13.5	0.22	**40AP1**	–	–
3	76	4	131	136	61.9	106.4	17.0	0.40	**48AP1**	–	–
3 1/2	89	4	136	152	69.9	102.7	17.0	0.53	**56AP1**	–	–
4	102	4	146	162	77.8	130.2	17.0	0.61	**64AP1**	–	–
5	127	4	181	184	92.1	152.4	17.0	0.86	**80AP1**	–	–

6000 PSI Series

1/2	13	4	48	57	18.2	40.5	9.0	0.02	**8AP2**	–	–
3/4	19	4	60	71	23.8	50.8	11.0	0.10	**12AP2**	–	–
1	25	4	70	81	27.8	57.2	13.0	0.12	**16AP2**	–	–
1 1/4	32	4	78	95	31.8	66.6	15.0	0.17	**20AP2**	–	–
1 1/2	38	4	95	113	36.5	79.4	17.0	0.22	**24AP2**	–	–
2	51	4	117	135	44.5	96.8	21.0	0.36	**32AP2**	–	–
2 1/2	64	4	150	176	58.7	123.8	25.0	0.58	**40AP2**	–	–
3	76	4	178	210	71.4	152.4	32.0	0.86	**48AP2**	–	–

This flange locking plate is not used under pressure.

Stainless steel parts may have dimensional deviations. Additional information on request.

*Please add the **suffixes** below according to the material/surface required.

Order code suffixes			
Material	Suffix surface and material	Example	Description
Steel, zinc plated, Cr(VI)-free	CF	8AP1CF	only locking plate
Stainless steel	SS	8AP1SS	only locking plate

PFMQ Flange head plug flat

(ISO 6162-1/-2)

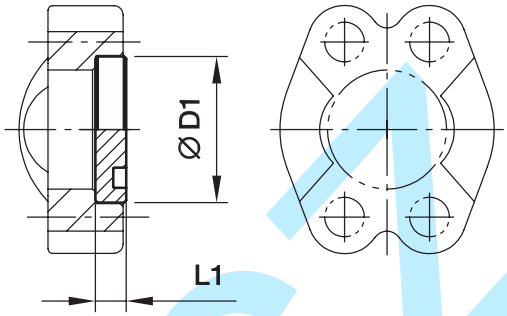

3000 PSI Series

Nom. flange size SAE (in.)	D1	L1	Weight (steel) kg/piece	O-ring face Order code*	PN (bar)[1] CF
1/2	30.2	6.8	0.03	**8PFMQ1**	210
3/4	38.1	6.8	0.05	**12PFMQ1**	210
1	44.5	8.0	0.09	**16PFMQ1**	210
1 1/4	50.8	8.0	0.12	**20PFMQ1**	210
1 1/2	60.3	8.0	0.17	**24PFMQ1**	160
2	71.4	9.6	0.29	**32PFMQ1**	200
2 1/2	84.1	9.6	0.39	**40PFMQ1**	–
3	101.6	9.6	0.58	**48PFMQ1**	–
3 1/2	114.3	11.3	0.86	**56PFMQ1**	–
4	127.0	11.3	1.09	**64PFMQ1**	–
5	152.4	11.3	1.96	**80PFMQ1**	–

6000 PSI Series

1/2	31.8	7.8	0.04	**8PFMQ2**	250
3/4	41.3	8.8	0.09	**12PFMQ2**	250
1	47.6	9.5	0.13	**16PFMQ2**	250
1 1/4	54.0	10.3	0.18	**20PFMQ2**	250
1 1/2	63.5	12.6	0.30	**24PFMQ2**	250
2	79.4	12.6	0.48	**32PFMQ2**	250
2 1/2	107.7	20.5	1.44	**40PFMQ2**	–
3	131.7	26.0	2.75	**48PFMQ2**	–

[1]) Pressure shown = Item deliverable

$\frac{\text{PN (bar)}}{10}$ = PN (MPa)

Flange head plug in stainless steel on request.

*Please add the **suffixes** below according to the material/surface required.

Order code suffixes			
Material	Suffix surface and material	Example	Description
Steel, zinc plated, Cr(VI)-free	CF	8PFMQ1CF	only flange head plug

N

kovaz.cz

PMQ Flange head plug

(ISO 6162-1/-2)

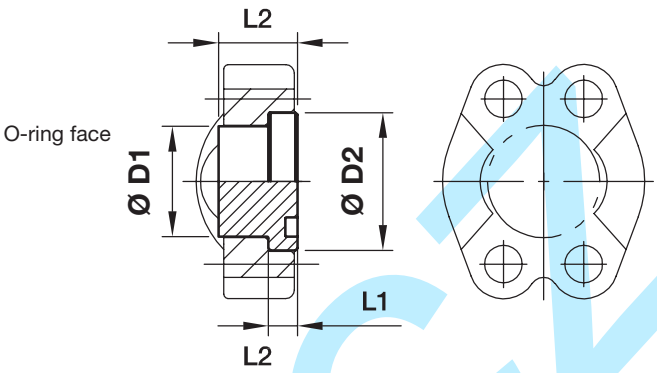

3000 PSI Series

Nom. flange size SAE (in.)	D1	D2	L1	L2	Weight (steel) kg/piece	O-ring face Order code	Flat face Order code	PN (bar)[1] CF
1/2	24.0	30.2	6.8	16	0.06	**8PMQ1**	**8PCMQ1**	350
3/4	31.8	38.1	6.8	17	0.12	**12PMQ1**	**12PCMQ1**	350
1	38.0	44.5	8.0	17	0.16	**16PMQ1**	**16PCMQ1**	315
1 1/4	43.0	50.8	8.0	17	0.22	**20PMQ1**	**20PCMQ1**	250
1 1/2	50.0	60.3	8.0	19	0.33	**24PMQ1**	**24PCMQ1**	200
2	62.0	71.4	9.6	19	0.51	**32PMQ1**	**32PCMQ1**	200
2 1/2	74.0	84.1	9.6	40	1.42	**40PMQ1**	**40PCMQ1**	160
3	90.0	101.6	9.6	45	2.35	**48PMQ1**	**48PCMQ1**	138
3 1/2	102.0	114.3	11.3	30	2.62	**56PMQ1**	**56PCMQ1**	35
4	114.5	127.0	11.3	36	3.14	**64PMQ1**	**64PCMQ1**	35
5	140.0	152.4	11.3	45	5.12	**80PMQ1**	**80PCMQ1**	35

6000 PSI Series

1/2	24.0	31.8	7.8	14	0.07	**8PMQ2**	**8PCMQ1**	400
3/4	31.8	41.3	8.8	15	0.12	**12PMQ2**	**12PCMQ1**	400
1	38.0	47.6	9.5	16	0.18	**16PMQ2**	**16PCMQ1**	400
1 1/4	44.0	54.0	10.3	16	0.24	**20PMQ2**	**20PCMQ1**	400
1 1/2	50.8	63.5	12.6	19	0.40	**24PMQ2**	**24PCMQ1**	400
2	67.0	79.4	12.6	30	0.95	**32PMQ2**	**32PCMQ1**	400
2 1/2	89.0	108.0	21.2	45	2.67	**40PMQ2**	**40PCMQ1**	400
3	114.3	132.0	26.5	55	5.11	**48PMQ2**	**48PCMQ1**	400

[1]) Pressure shown = Item deliverable

$\frac{\text{PN (bar)}}{10}$ = PN (MPa)

Flange head plug in stainless steel on request.

Please add the **suffixes** below according to the material/surface required.

Order code suffixes			
Material	Suffix surface and material	Example	Description
Steel, zinc plated, Cr(VI)-free	CF	8PMQ1CF	only flange head plug

PAGL-(G/M) SAE 4 bolt flange with test point port

SAE Flange with test point port
(ISO 6162-1/-2)

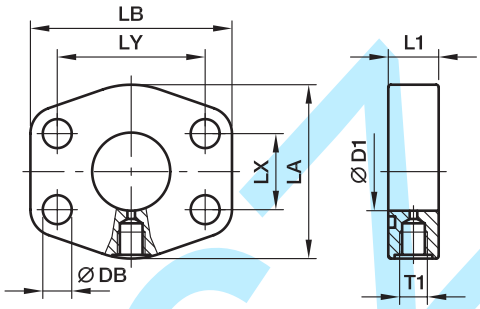

3000 PSI Series

Nom. flange size SAE (in.)	Nom. flange size ISO (DN)	T1	D1	L1	LA	LB	LX	LY	DB	Weight (steel) kg/piece	Order code*	PN (bar)[1] S	PN (bar)[1] SS
1	25	**G 1/4**	25	19	53	71	26.2	52.4	10.6	0.43	**PAGL102G14**	348	348
1	25	**M 10×1.0**	25	19	53	71	26.2	52.4	10.6	0.50	**PAGL102M10**	348	348
1 1/4	32	**G 1/4**	31	20	69	82	30.2	58.7	10.6	0.56	**PAGL104G14**	278	278
1 1/4	32	**M 10×1.0**	31	20	69	82	30.2	58.7	10.6	0.55	**PAGL104M10**	278	278
1 1/2	38	**G 1/4**	38	25	77	94	35.7	69.9	13.3	0.86	**PAGL106G14**	210	210
1 1/2	38	**M 10×1.0**	38	25	77	94	35.7	69.9	13.3	0.90	**PAGL106M10**	210	210
2	51	**G 1/4**	50	25	89	103	42.9	77.8	13.3	0.95	**PAGL108G14**	210	210
2	51	**M 10×1.0**	50	25	89	103	42.9	77.8	13.3	0.96	**PAGL108M10**	210	210
2 1/2	64	**G 1/4**	63	25	101	115	50.8	88.9	13.3	1.21	**PAGL110G14**	175	175
2 1/2	64	**M 10×1.0**	63	25	101	115	50.8	88.9	13.3	1.23	**PAGL110M10**	175	175
3	76	**G 1/4**	73	27	124	135	61.9	106.4	16.7	2.00	**PAGL112G14**	138	138
3	76	**M 10×1.0**	73	27	124	135	61.9	106.4	16.7	2.01	**PAGL112M10**	138	138
3 1/2	89	**G 1/4**	89	27	136	152	69.9	120.7	16.7	2.42	**PAGL114G14**	35	35
3 1/2	89	**M 10×1.0**	89	27	136	152	69.9	120.7	16.7	2.43	**PAGL114M10**	35	35
4	102	**G 1/4**	99	27	146	162	77.8	130.2	16.7	2.73	**PAGL116G14**	35	35
4	102	**M 10×1.0**	99	27	146	162	77.8	130.2	16.7	2.73	**PAGL116M10**	35	35
5	127	**G 1/4**	120	28	180	184	92.1	152.4	16.7	3.76	**PAGL118G14**	35	35
5	127	**M 10×1.0**	120	28	180	184	92.1	152.4	16.7	3.76	**PAGL118M10**	35	35

6000 PSI Series

1	25	**G 1/4**	25	22	69	82	27.8	57.2	13.3	0.65	**PAGL403G14**	420	420
1	25	**M 10×1.0**	25	22	69	82	27.8	57.2	13.3	0.65	**PAGL403M10**	420	420
1 1/4	32	**G 1/4**	31	26	79	96	31.8	66.6	15.0	0.95	**PAGL404G14**	420	420
1 1/4	32	**G 1/4**	31	26	79	96	31.8	66.6	13.3	0.95	**PAGL404/12G14**	420	420
1 1/4	32	**M 10×1.0**	31	26	79	96	31.8	66.6	15.0	0.95	**PAGL404M10**	420	420
1 1/4	32	**M 10×1.0**	31	26	79	96	31.8	66.6	13.3	0.95	**PAGL404/12M10**	420	420
1 1/2	38	**G 1/4**	38	30	89	108	36.5	79.3	16.7	1.37	**PAGL405G14**	420	420
1 1/2	38	**M 10×1.0**	38	30	89	108	36.5	79.3	16.7	1.37	**PAGL405M10**	420	420
2	51	**G 1/4**	50	36	116	135	44.5	96.8	20.6	2.84	**PAGL406G14**	420	420
2	51	**M 10×1.0**	50	36	116	135	44.5	96.8	20.6	2.84	**PAGL406M10**	420	420
2 1/2	64	**G 1/4**	63	45	150	166	58.7	123.8	25.0	5.90	**PAGL408G14**	420	420
2 1/2	64	**M 10×1.0**	63	45	150	166	58.7	123.8	25.0	5.90	**PAGL408M10**	420	420
3	76	**G 1/4**	73	55	178	208	71.4	152.4	31.0	8.50	**PAGL410G14**	420	420
3	76	**M 10×1.0**	73	55	178	208	71.4	152.4	31.0	8.50	**PAGL410M10**	420	420

[1] Pressure shown = Item deliverable

$\frac{\text{PN (bar)}}{10}$ = PN (MPa)

Stainless steel parts may have dimensional deviations. Additional information on request.

*Please add the **suffixes** below according to the material/surface required.

Order code suffixes			
Material	Suffix surface and material	Example	Description
Steel, zinc plated, Cr(VI)-free	CF	PAGL102G14CF	only flange
Stainless steel	SS	PAGL102G14SS	only flange

PRF SAE Straight reducing flange adapter

ISO 6162-1/-2

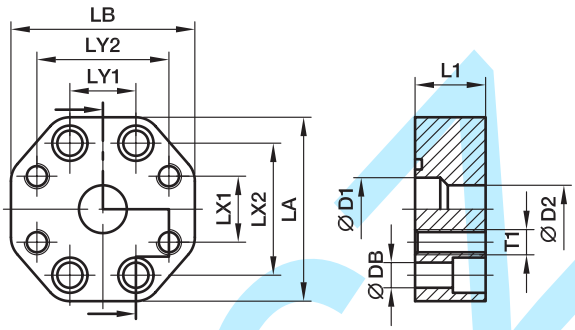

3000 PSI Series

Nom. flange size SAE (in.)	Nom. flange size ISO (DN)	D1	D2	L1	LA	LB	LX1	LX2	LY1	LY2	DB	Bolts (metr.)	T1	Weight (steel) kg/piece	Order code*	PN (bar)[1] S
1×1	25/25	25	25	28	73	73	26.2	52.4	26.2	52.4	10.6	M 10×30	**M10**	0.75	**PRF102/102**	210
1×3/4	25/19	25	19	28	73	73	22.3	52.4	26.2	47.6	10.6	M 10×30	**M10**	0.76	**PRF102/100**	210
1 1/4×1 1/4	32/32	30	30	28	80	80	30.2	58.7	30.2	58.7	10.6	M 10×30	**M10**	0.83	**PRF104/104**	210
1 1/4×1	32/25	30	25	28	80	71	26.2	58.7	30.2	52.4	10.6	M 10×30	**M10**	0.95	**PRF104/102**	210
1 1/2×1 1/2	38/38	38	38	32	94	94	35.7	69.9	35.7	69.9	13.3	M 12×35	**M12**	1.20	**PRF106/106**	210
1 1/2×1 1/4	38/32	38	30	32	94	80	30.2	69.9	35.7	58.7	13.3	M 12×35	**M10**	1.36	**PRF106/104**	210
2×2	51/51	50	50	33	103	103	42.9	77.8	42.9	77.8	13.3	M 12×35	**M12**	1.56	**PRF108/108**	210
2×1 1/2	51/38	50	38	33	103	94	35.7	77.8	42.9	70.0	13.3	M 12×35	**M12**	1.69	**PRF108/106**	210
2 1/2×2 1/2	64/64	63	63	33	115	115	50.8	88.9	50.8	88.9	13.3	M 12×35	**M12**	2.05	**PRF110/110**	175
2 1/2×2	64/51	63	50	33	115	103	42.9	88.9	50.8	77.8	13.3	M 12×35	**M12**	2.04	**PRF110/108**	175
3×3	76/76	73	73	36	135	135	61.9	106.4	61.9	106.4	16.7	M 16×40	**M16**	2.61	**PRF112/112**	138
3×2 1/2	76/64	73	63	36	135	115	50.8	106.4	61.9	89.0	16.7	M 16×40	**M12**	2.61	**PRF112/110**	138

6000 PSI Series

3/4×3/4	19/19	19	19	28	73	73	23.8	50.8	23.8	50.8	10.6	M 10×30	**M10**	0.80	**PRF402/402**	420
1×1	25/25	25	25	33	80	80	27.8	57.2	27.8	57.2	13.3	M 12×35	**M12**	1.03	**PRF403/403**	420
1×3/4	25/19	25	19	33	80	71	23.8	57.2	27.8	50.8	13.3	M 12×35	**M10**	0.98	**PRF403/402**	420
1 1/4×1 1/4	32/32	30	30	33	94	94	31.8	66.6	31.8	66.6	15.0	M 14×35	**M14**	1.47	**PRF404/404**	420
1 1/4×1 1/4	32/32	30	30	33	94	94	31.8	66.6	31.8	66.6	13.3	M 12×35	**M12**	1.47	**PRF404/12/404/12**	420
1 1/4×1	32/25	30	25	33	94	80	27.8	66.6	31.8	57.2	15.0	M 14×35	**M12**	1.26	**PRF404/403**	420
1 1/4×1	32/25	30	25	33	94	80	27.8	66.6	31.8	57.2	13.3	M 12×35	**M12**	1.26	**PRF404/12/403**	420
1 1/2×1 1/2	38/38	38	38	48	106	106	36.5	79.3	36.5	79.3	16.7	M 16×50	**M16**	1.72	**PRF405/405**	420
1 1/2×1 1/4	38/32	38	30	48	106	94	31.8	79.3	36.5	66.6	16.7	M 16×50	**M14**	2.32	**PRF405/404**	420
1 1/2×1 1/4	38/32	38	30	48	106	94	31.8	79.3	36.5	66.6	16.7	M 16×50	**M12**	2.32	**PRF405/404/12**	420
2×2	51/51	50	50	48	135	135	44.5	96.8	44.5	96.8	20.6	M 20×55	**M20**	4.20	**PRF406/406**	420
2×1 1/2	51/38	50	38	48	135	106	36.5	96.8	44.5	79.3	20.6	M 20×55	**M16**	3.35	**PRF406/405**	420
2 1/2×2	64/51	63	50	53	166	150	44.5	123.8	58.7	96.8	25.0	M 24×60	**M20**	6.40	**PRF408/406**	420
3×2	76/51	73	50	58	208	178	44.5	152.4	71.4	96.8	31.0	M 30×70	**M20**	10.40	**PRF410/406**	420

[1]) Pressure shown = Item deliverable

$\frac{\text{PN (bar)}}{10}$ = PN (MPa)

Stainless steel parts may have dimensional deviations. Additional information on request.

*Please add the **suffixes** below according to the material/surface required.

Order code suffixes			
Material	Suffix surface and material	Example	Description
Steel, zinc plated, Cr(VI)-free	CF	PRF102/102CF	only flange
Stainless steel	SS	PRF102/102SS	only flange

BFG Gear pump flange straight

Hydraulic flange / EO 24° cone end

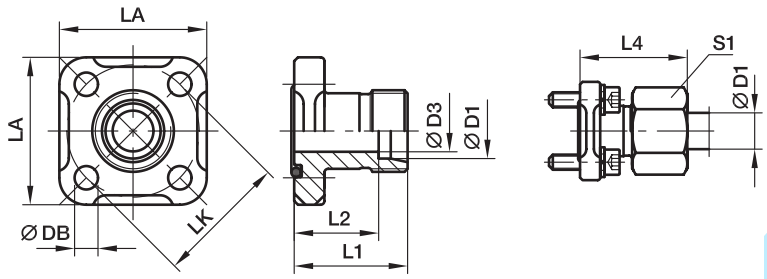

BFG Straight flange connection EO 24° cone end

LK	D1[2]	D3	L1	L2	L4	LA	S1	DB	Bolts (metr.)	O-ring	Weight (steel) kg/piece	Order code*	PN (bar)[1] CF
35	10L	8	30	23.0	39.0	40	19	6.4	M 06×22	20×2.5	0.15	**BFG10L/LK35**	315
35	12L	10	30	23.0	39.0	40	22	6.4	M 06×22	20×2.5	0.16	**BFG12L/LK35**	315
35	15L	12	30	23.0	38.0	40	27	6.4	M 06×22	20×2.5	0.19	**BFG15L/LK35**	250
35	16S	12	30	21.5	39.5	40	30	6.4	M 06×22	20×2.5	0.21	**BFG16S/LK35**	315
40	15L	12	35	28.0	43.0	42	27	6.4	M 06×22	26×2.5	0.17	**BFG15L/LK40**	100
40	18L	15	35	27.5	44.0	42	32	6.4	M 06×22	26×2.5	0.22	**BFG18L/LK40**	100
40	22L	19	35	27.5	44.5	42	36	6.4	M 06×22	26×2.5	0.26	**BFG22L/LK40**	100
40	28L	24	42	34.5	51.5	42	41	6.4	M 06×22	26×2.5	0.30	**BFG28L/LK40**	100
55	20S	16	40	29.5	51.0	55	36	8.4	M 08×25	32×2.5	0.49	**BFG20S/LK55**	250

[1] Pressure shown = Item deliverable

[2] L = light series; S = heavy series

$\frac{\text{PN (bar)}}{10}$ = PN (MPa)

Delivery without nut and ring.
Information on ordering complete fittings or alternative sealing materials see page N12.

*Please add the **suffixes** below according to the material/surface required.

Order code suffixes			
Material	Suffix surface and material	Example incl. metr. bolts and O-ring	Standard sealing material (no additional suffix needed)
Steel, zinc plated, Cr(VI)-free	CF	BFG16S/LK35OMDCF	NBR

kovaz.si

BFW Gear pump flange 90° elbow

Hydraulic flange / EO 24° cone end

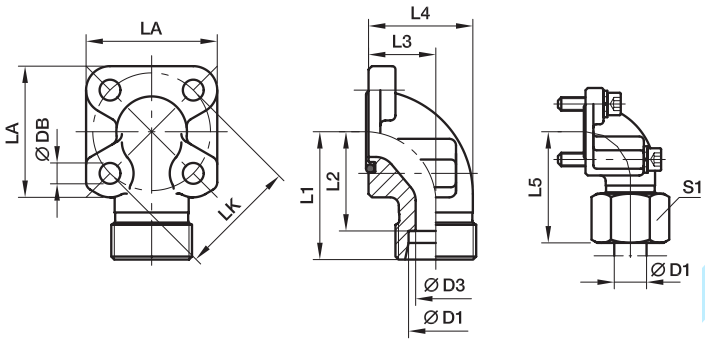

BFW 90° Flange connection EO 24° cone end

LK	D1[2]	D3	L1	L2	L3	L4	L5	LA	S1	DB	Bolts 2 pieces (metr.)	Bolts 2 pieces (metr.)	O-ring	Weight (steel) kg/piece	Order code*	PN (bar)[1] CF
35	10L	8	38	31.0	16.5	26.5	47.0	40	19	6.4	M 06×22	M 06×35	20×2.5	0.23	**BFW10L/LK35**	315
35	12L	10	38	31.0	16.5	26.5	47.0	40	22	6.4	M 06×22	M 06×35	20×2.5	0.26	**BFW12L/LK35**	315
35	15L	12	38	31.0	16.5	26.5	46.0	40	27	6.4	M 06×22	M 06×35	20×2.5	0.26	**BFW15L/LK35**	250
35	16S	12	38	29.5	20.0	31.0	48.0	40	30	6.4	M 06×22	M 06×40	20×2.5	0.30	**BFW16S/LK35**	315
35	20S	16	45	34.5	25.0	38.0	56.0	40	36	6.4	M 06×22	M 06×45	20×2.5	0.40	**BFW20S/LK35**	315
35	22L	19	45	37.5	25.0	38.0	54.5	40	36	6.4	M 06×22	M 06×45	20×2.5	0.25	**BFW22L/LK35**	250
40	15L	12	38	31.0	22.5	36.5	46.0	42	27	6.4	M 06×22	M 06×22	26×2.5	0.23	**BFW15L/LK40**	100
40	18L	15	38	30.5	22.5	36.5	47.0	42	32	6.4	M 06×22	M 06×22	26×2.5	0.30	**BFW18L/LK40**	100
40	22L	19	38	30.5	22.5	36.5	47.5	42	36	6.4	M 06×22	M 06×22	26×2.5	0.30	**BFW22L/LK40**	100
40	28L	22	40	32.5	28.0	43.0	49.0	42	41	6.4	M 06×20	M 06×50	26×2.5	0.40	**BFW28L/LK40**	100
40	35L	31	41	30.5	34.0	55.0	52.0	42	50	6.4	M 06×22	M 06×60	26×2.5	0.35	**BFW35L/LK40**	100
40	20S	16	40	29.5	22.5	35.5	50.0	42	36	6.4	M 06×22	M 06×45	26×2.5	0.35	**BFW20S/LK40**	250
55	35L	31	49	38.5	32.0	51.5	62.0	58	50	8.4	M 08×25	M 08×60	32×2.5	0.74	**BFW35L/LK55**	100
55	42L	38	49	38.0	40.0	64.5	61.0	58	60	8.4	M 08×25	M 08×70	32×2.5	0.60	**BFW42L/LK55**	100
55	20S	17	45	34.5	24.0	38.0	56.0	58	36	8.4	M 08×25	M 08×50	32×2.5	0.64	**BFW20S/LK55**	250
55	25S	20	49	37.0	30.0	46.0	61.0	58	46	8.4	M 08×25	M 08×55	32×2.5	0.80	**BFW25S/LK55**	250
55	30S	26	49	35.5	32.0	50.0	62.0	58	50	8.4	M 08×25	M 08×50	32×2.5	0.81	**BFW30S/LK55**	250

[1] Pressure shown = Item deliverable

[2] L = light series; S = heavy series

$\frac{\text{PN (bar)}}{10}$ = PN (MPa)

Delivery without nut and ring.
Information on ordering complete fittings or alternative sealing materials see page N12.

*Please add the **suffixes** below according to the material/surface required.

Order code suffixes			
Material	Suffix surface and material	Example incl. metr. bolts and O-ring	Standard sealing material (no additional suffix needed)
Steel, zinc plated, Cr(VI)-free	CF	BFW16S/LK35OMDCF	NBR

BFW3 Gear pump flange 90° elbow 3 holes

Hydraulic flange / EO 24° cone end

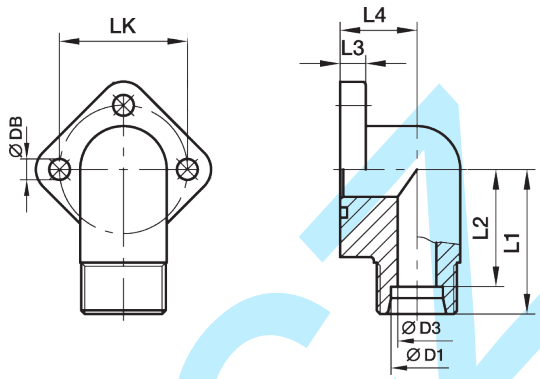

BFW-3 90° Flange connection EO 24° cone end

LK	D1[2]	D3	L1	L2	L3	L4	DB	Bolts (metr.)	O-ring	Weight (steel) kg/piece	Order code*	PN (bar)[1] CF
30	12L	9	31	24.0	9.0	17.0	6.5	M 06×22	16×2.5	0.20	**BFW3-12L/LK30**	250
30	15L	11	31	24.0	9.0	17.0	6.5	M 06×22	16×2.5	0.22	**BFW3-15L/LK30**	250
30	18L	12	31	23.5	9.0	17.0	6.5	M 06×22	16×2.5	0.25	**BFW3-18L/LK30**	160
40	22L	18	36	28.5	11.5	23.0	8.5	M 08×30	24×2.5	0.44	**BFW3-22L/LK40**	160
40	28L	19	36	28.5	11.5	23.0	8.5	M 08×30	24×2.5	0.45	**BFW3-28L/LK40**	160

[1] Pressure shown = Item deliverable

[2] L = light series

$\frac{\text{PN (bar)}}{10}$ = PN (MPa)

Delivery without nut and ring.
Information on ordering complete fittings or alternative sealing materials see page N12.

*Please add the **suffixes** below according to the material/surface required.

Order code suffixes			
Material	Suffix surface and material	Example incl. metr. bolts and O-ring	Standard sealing material (no additional suffix needed)
Steel, zinc plated, Cr(VI)-free	CF	BFW3-12L/LK30OMDCF	NBR

kovaz.cz

BFGL Gear pump flange straight

Hydraulic flange / O-Lok®-connection straight

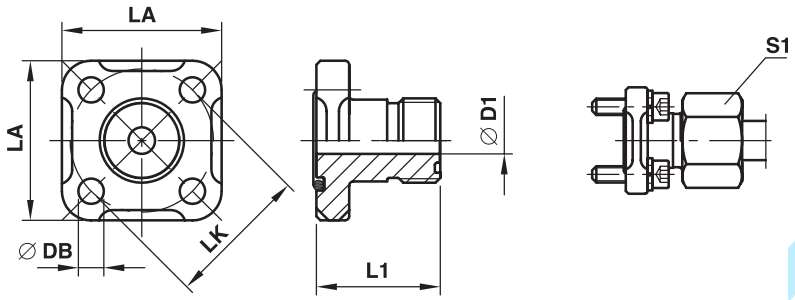

BFGL Straight flange connection O-Lok® end

LK	D1	S1	Thread UN/UNF T1	L1	LA	DB	Bolts (metr.)	O-ring 1	O-ring 2	Weight (steel) kg/piece	Order code*	PN (bar)[1] CF
35	6.5	10L	11/16-16	30	40	6.4	M 06×22	20×2.5	9.25×1.78	0.09	**6BFGL/LK35**	315
35	9.5	12L	13/16-16	30	40	6.4	M 06×22	20×2.5	12.42×1.78	0.10	**8BFGL/LK35**	315
35	12.5	15L	1-14	30	40	6.4	M 06×22	20×2.5	15.60×1.78	0.10	**10BFGL/LK35**	250
40	12.5	15L	1-14	35	42	6.4	M 06×22	26×2.5	15.60×1.78	0.10	**10BFGL/LK40**	100
40	15.5	18L	1 3/16-12	35	42	6.4	M 06×22	26×2.5	18.77×1.78	0.16	**12BFGL/LK40**	100
40	20.5	28L	1 7/16-12	35	42	6.4	M 06×22	26×2.5	23.52×1.78	0.17	**16BFGL/LK40**	100

[1]) Pressure shown = Item deliverable

$\frac{\text{PN (bar)}}{10}$ = PN (MPa)

Delivery without nut and ring.
Information on ordering complete fittings or alternative sealing materials see page N12.

*Please add the **suffixes** below according to the material/surface required.

Order code suffixes			
Material	Suffix surface and material	Example incl. metr. bolts and O-ring	Standard sealing material (no additional suffix needed)
Steel, zinc plated, Cr(VI)-free	CF	6BFGL/LK35OMDCF	NBR

BFWL Gear pump flange 90° elbow

Hydraulic flange / O-Lok®-connection – 90°

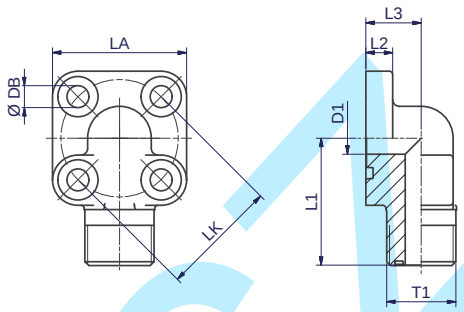

BFWL-90° O-Lok®-connection

LK	D1	Thread UN/UNF T1	L1	L2	L3	LA	DB	Bolts 2 pieces (metr.)	Bolts 2 pieces (metr.)	O-ring 1	O-ring 2	Weight kg/piece	Order code	PN (bar)[1] CF
35	6.5	11/16-16	38	8	16.5	40	6.5	M 06×22	M 06×35	20×2.5	9.25×1.78	0.16	**6BFWL/LK35**	315
35	9.5	13/16-16	38	8	16.5	40	6.5	M 06×22	M 06×35	20×2.5	12.42×1.78	0.16	**8BFWL/LK35**	315
35	12.5	1-14	38	8	20.0	40	6.5	M 06×22	M 06×40	20×2.5	15.60×1.78	0.19	**10BFWL/LK35**	250
40	12.5	1-14	40	8	22.5	42	6.5	M 06×22	M 06×40	26×2.5	15.60×1.78	0.16	**10BFWL/LK40**	100
40	15.5	1 3/16-12	45	8	24.0	42	6.5	M 06×22	M 06×45	26×2.5	18.77×1.78	0.20	**12BFWL/LK40**	250

[1]) Pressure shown = Item deliverable

$$\frac{\text{PN (bar)}}{10} = \text{PN (MPa)}$$

Material: Steel
– Complete with O-ring and metric bolts
– Single part without accessories

*Please add the **suffixes** below according to the material/surface required.

Order code suffixes			
Material	Suffix surface and material	Example incl. metr. bolts and O-ring	Standard sealing material (no additional suffix needed)
Steel, zinc plated, Cr(VI)-free	CF	6BFW/L/LK35CFM	NBR

kovaz.cz

BFW-G Gear pump flange 90° elbow

Hydraulic flange / BSPP 60° cone end
(ISO 8434-6)

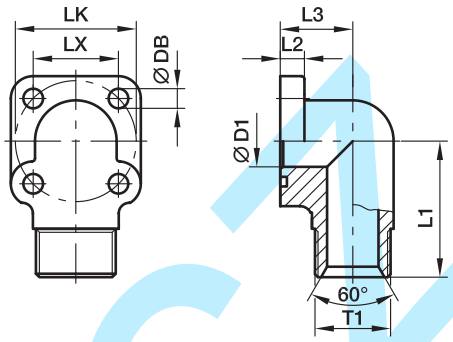

BFW-G 90° BSPP 60° cone end

LK	T1	D1	L1	L2	L3	LX	DB	Bolts 2 pieces (metr.)	Bolts 2 pieces (metr.)	O-ring	Weight (steel) kg/piece	Order code*	PN (bar)[1] CF
35	**G 3/8**	10	40	8	20.0	24.8	6.5	M 06×20	M 06×35	18.72×2.62	0.20	**BFW-G38/LK35**	315
35	**G 1/2**	12	40	8	16.5	24.8	6.5	M 06×20	M 06×40	18.72×2.62	0.20	**BFW-G12/LK35**	315
35	**G 3/4**	12	40	8	20.0	24.8	6.5	M 06×20	M 06×40	18.72×2.62	0.25	**BFW-G34/LK35**	315
40	**G 3/8**	10	40	8	22.5	28.2	6.5	M 06×20	M 06×40	25.07×2.62	0.32	**BFW-G38/LK40**	250
40	**G 1/2**	12	45	8	24.0	28.2	6.5	M 06×20	M 06×40	25.07×2.62	0.26	**BFW-G12/LK40**	250
40	**G 3/4**	17	45	8	24.0	28.2	6.5	M 06×20	M 06×40	25.07×2.62	0.28	**BFW-G34/LK40**	250
40	**G 1**	19	40	8	28.0	28.2	6.5	M 06×20	M 06×50	25.07×2.62	0.30	**BFW-G1/LK40**	250
55	**G 1/2**	13	49	12	24.0	38.8	8.5	M 08×25	M 08×45	31.42×2.62	0.54	**BFW-G12/LK55**	315
55	**G 3/4**	17	46	12	31.0	38.8	8.5	M 08×25	M 08×60	31.42×2.62	0.48	**BFW-G34/LK55**	315
55	**G 1**	22	50	12	40.0	38.8	8.5	M 08×25	M 08×70	31.42×2.62	0.62	**BFW-G1/LK55**	315

[1]) Pressure shown = Item deliverable

$\frac{\text{PN (bar)}}{10}$ = PN (MPa)

*Please add the **suffixes** below according to the material/surface required.

Order code suffixes			
Material	Suffix surface and material	Example incl. metr. bolts and O-ring	Standard sealing material (no additional suffix needed)
Steel, zinc plated, Cr(VI)-free	CF	BFW-G38/LK35CFM	NBR

kovaz.cz

BFW-GI Gear pump flange 90° elbow

Hydraulic flange / Female BSPP thread
(ISO 1179-1)

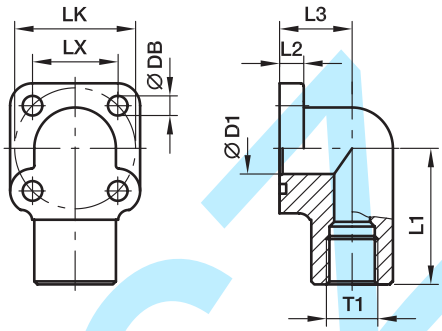

BFW-GI 90° Female BSPP thread

LK	T1	D1	L1	L2	L3	LX	DB	Bolts 2 pieces (metr.)	Bolts 2 pieces (metr.)	O-ring	Weight (steel) kg/piece	Order code*	PN (bar)[1] CF
35	**G 3/8**	10	40	8	20.0	24.8	6.5	M 06×20	M 06×35	18.72×2.62	0.22	**BFW-GI38/LK35**	315
35	**G 1/2**	13	40	8	20.0	24.8	6.5	M 06×20	M 06×35	18.72×2.62	0.30	**BFW-GI12/LK35**	315
40	**G 3/8**	10	45	8	24.0	28.2	6.5	M 06×20	M 06×40	25.07×2.62	0.42	**BFW-GI38/LK40**	250
40	**G 1/2**	13	45	8	24.0	28.2	6.5	M 06×20	M 06×40	25.07×2.62	0.42	**BFW-GI12/LK40**	250
40	**G 3/4**	17	45	8	24.0	28.2	6.5	M 06×20	M 06×40	25.07×2.62	0.32	**BFW-GI34/LK40**	250
55	**G 1/2**	13	46	12	24.0	38.8	8.5	M 08×25	M 08×45	31.42×2.62	0.58	**BFW-GI12/LK55**	315
55	**G 3/4**	17	49	12	31.0	38.8	8.5	M 08×25	M 08×60	31.42×2.62	0.69	**BFW-GI34/LK55**	315
55	**G 1**	22	50	12	40.0	38.8	8.5	M 08×25	M 08×70	31.42×2.62	0.81	**BFW-G I1/LK55**	315

[1] Pressure shown = Item deliverable

$\frac{\text{PN (bar)}}{10}$ = PN (MPa)

*Please add the **suffixes** below according to the material/surface required.

Order code suffixes			
Material	Suffix surface and material	Example incl. metr. bolts and O-ring	Standard sealing material (no additional suffix needed)
Steel, zinc plated, Cr(VI)-free	CF	BFW-GI38/LK35CFM	NBR

kovaz.cz

BFW-S Gear pump flange 90° elbow

Hydraulic flange / Socket weld end

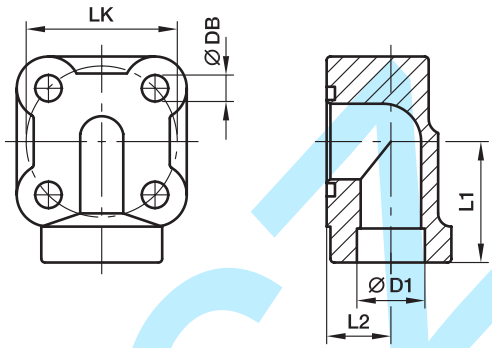

BFW-S 90° Socket weld end

LK	D1	L1	L2	DB	Bolts (metr.)	O-ring	Weight (steel) kg/piece	Order code*	PN (bar)[1] S
30	12	30	14	7.0	M 06×30	15.88×2.62	0.30	**BFW-S12/LK30/M6**	200
30	12	27	13	8.5	M 08×35	15.88×2.62	0.29	**BFW-S12/LK30/M8**	250
30	14	27	13	6.5	M 06×30	15.88×2.62	0.29	**BFW-S14/LK30/M6**	200
30	14	27	13	8.5	M 08×35	15.88×2.62	0.28	**BFW-S14/LK30/M8**	250
30	16	27	13	6.5	M 06×30	15.88×2.62	0.29	**BFW-S16/LK30/M6**	200
30	16	27	13	8.5	M 08×35	15.88×2.62	0.28	**BFW-S16/LK30/M8**	250
30	18	27	13	6.5	M 06×30	15.88×2.62	0.27	**BFW-S18/LK30/M6**	200
35	14	30	12	6.5	M 06×35	18.72×2.62	0.40	**BFW-S14/LK35/M6**	200
35	14	30	14	8.5	M 08×40	18.72×2.62	0.39	**BFW-S14/LK35/M8**	250
35	16	30	12	6.5	M 06×35	18.72×2.62	0.27	**BFW-S16/LK35/M6**	200
35	16	30	14	8.5	M 08×40	18.72×2.62	0.27	**BFW-S16/LK35/M8**	250
35	18	30	14	6.5	M 06×35	18.72×2.62	0.26	**BFW-S18/LK35/M6**	200
35	18	30	14	8.5	M 08×40	18.72×2.62	0.25	**BFW-S18/LK35/M8**	250
35	20	30	14	7.0	M 06×35	18.72×2.62	0.27	**BFW-S20/LK35/M6**	200
40	18	32	17	6.5	M 06×40	23.81×2.62	0.37	**BFW-S18/LK40/M6**	200
40	18	32	17	8.5	M 08×40	23.81×2.62	0.36	**BFW-S18/LK40/M8**	250
40	20	32	17	6.5	M 06×40	23.81×2.62	0.36	**BFW-S20/LK40/M6**	200
40	20	32	17	8.5	M 08×40	23.81×2.62	0.35	**BFW-S20/LK40/M8**	250
40	22	32	17	6.5	M 06×40	23.81×2.62	0.35	**BFW-S22/LK40/M6**	200
40	22	32	17	8.5	M 08×40	23.81×2.62	0.35	**BFW-S22/LK40/M8**	250
40	25	32	17	6.5	M 06×40	23.81×2.62	0.34	**BFW-S25/LK40/M6**	200
40	25	32	17	8.5	M 08×40	23.81×2.62	0.33	**BFW-S25/LK40/M8**	250

[1]) Pressure shown = Item deliverable

$\frac{\text{PN (bar)}}{10}$ = PN (MPa)

The pressures given here are the maximum allowable for the flange fittings. If the pipe or tube used has a lower pressure rating, then the welded assembly rating will be the lower one, assuming the weld is adequately strong.

*Please add the **suffixes** below according to the material/surface required.

Order code suffixes			
Material	Suffix surface and material	Example incl. metr. bolts and O-ring	Standard sealing material (no additional suffix needed)
Steel, blanc oil dipped	S	BFW-S16/LK30/M6SM	NBR

PF Gear pump flange straight

Hydraulic flange / Female BSPP thread
(ISO 1179-1)

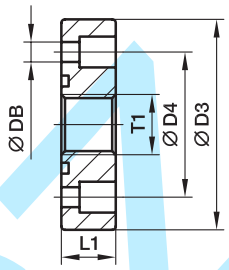

PF

Pump size	LK	T1	D3	D4	L1	DB	Bolts (metr.)	O-ring	Weight (steel) kg/piece	Order code*	PN (bar)[1] CF
1.0	30.0	**G 3/8**	45	30.0	13	6.5	M 06×16	18.77×1.78	0.15	**PF1**	315
2.0	40.0	**G 1/2**	58	40.0	15	8.5	M 08×20	25.12×1.78	0.29	**PF2**	315
3.0	51.0	**G 3/4**	75	51.0	18	10.5	M 10×25	31.42×2.62	0.58	**PF3**	315
3B	56.0	**G 3/4**	76	56.0	18	10.5	M 10×25	31.42×2.62	0.61	**PF3B**	315
3.5	62.0	**G 1**	88	62.0	20	10.5	M 10×25	39.69×3.53	0.84	**PF3.5**	315
3.5B	62.0	**G 1**	88	62.0	20	12.5	M 12×35	39.69×3.53	0.82	**PF3.5B**	315
4.0	72.5	**G 1 1/4**	98	72.5	22	12.5	M 12×30	47.22×3.53	1.06	**PF4**	315

PFL Gear pump flange straight

Hydraulic flange / Female BSPP thread – long version
(ISO 1179-1)

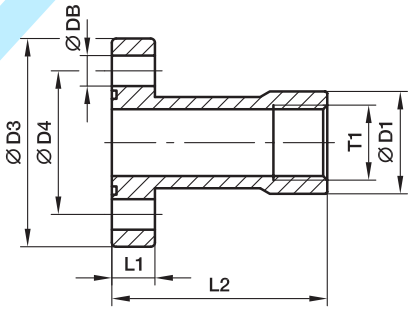

PFL

Pump size	LK	T1	D1	D3	D4	L1	L2	DB	Bolts (metr.)	O-ring	Weight (steel) kg/piece	Order code*	PN (bar)[1] CF
1.0	30.0	**G 3/8**	21.0	45	30.0	10	55	6.5	M 06×20	18.77×1.78	0.20	**PFL1**	315
2.0	40.0	**G 1/2**	26.5	58	40.0	12	60	8.5	M 08×25	25.12×1.78	0.39	**PFL2**	315
3.0	51.0	**G 3/4**	33.5	76	51.0	16	72	10.5	M 10×35	31.42×2.62	0.79	**PFL3**	315
3B	56.0	**G 3/4**	33.5	76	56.0	16	72	10.5	M 10×35	31.42×2.62	0.79	**PFL3.5**	315

[1] Pressure shown = Item deliverable

$\frac{\text{PN (bar)}}{10}$ = PN (MPa)

*Please add the **suffixes** below according to the material/surface required.

Order code suffixes			
Material	Suffix surface and material	Example incl. metr. bolts and O-ring	Standard sealing material (no additional suffix needed)
Steel, zinc plated, Cr(VI)-free **PF**	CF	PF1CFM	NBR
Steel, zinc plated, Cr(VI)-free **PFL**	CF	PFL1CFM	NBR

N

PFE Gear pump flange straight

Hydraulic flange / BSPP 60° cone end
(ISO 8434-6)

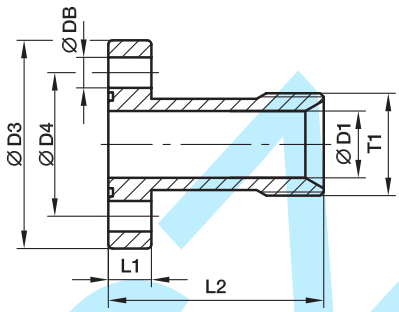

PFE

Pump size	LK	T1	D1	D3	D4	L1	L2	DB	Bolts (metr.)	O-ring	Weight (steel) kg/piece	Order code*	PN (bar)[1] CF
1.0	30.0	**G 1/2**	14.0	45	30.0	10	55	6.5	M 06×20	18.77×1.78	0.19	**PFE1**	315
2.0	40.0	**G 3/4**	19.0	58	40.0	12	60	8.5	M 08×25	25.12×1.78	0.37	**PFE2**	315
3.0	51.0	**G 1**	24.0	76	51.0	16	72	10.5	M 10×35	31.42×2.62	0.75	**PFE3**	315
3B	56.0	**G 1**	24.0	76	56.0	16	72	10.5	M 10×35	31.42×2.62	0.72	**PFE3.5**	315

PFB Gear pump flange straight

Hydraulic flange / Butt weld tube end

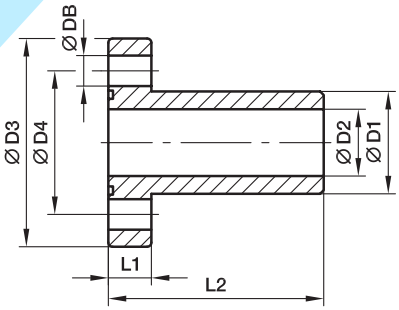

PFB

Pump size	LK	D1	D2	D3	D4	L1	L2	DB	Bolts (metr.)	O-ring	Weight (steel) kg/piece	Order code*	PN (bar)[1] S
1.0	30.0	19.0	14.0	45	30.0	10	55	6.5	M 06×20	18.77×1.78	0.19	**PFB1**	250
2.0	40.0	25.4	19.0	58	40.0	12	60	8.5	M 08×25	25.12×1.78	0.37	**PFB2**	250
3.0	51.0	32.0	24.5	76	51.0	16	72	10.5	M 10×35	31.42×2.62	0.78	**PFB3**	250
3B	56.0	32.0	24.5	76	56.0	16	72	10.5	M 10×35	31.42×2.62	0.74	**PFB3.5**	250

[1] Pressure shown = Item deliverable

$\frac{\text{PN (bar)}}{10}$ = PN (MPa)

The pressures (PFB) given here are the maximum allowable for the flange fittings. If the pipe or tube used has a lower pressure rating, then the welded assembly rating will be the lower one, assuming the weld is adequately strong.

*Please add the **suffixes** below according to the material/surface required.

Order code suffixes				
Material		Suffix surface and material	Example incl. metr. bolts and O-ring	Standard sealing material (no additional suffix needed)
Steel, zinc plated, Cr(VI)-free	**PFE**	CF	PFE1CFM	NBR
Steel, blanc oil dipped	**PFB**	S	PFB1SM	NBR

BFW3-G Gear pump flange 90° elbow 3 holes

Hydraulic flange / Female BSPP thread
(ISO 1179-1)

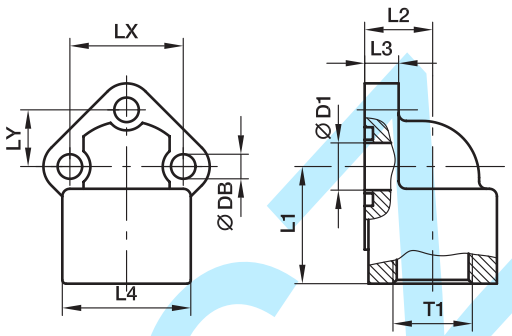

PWDS Female BSPP thread

Pump size	LK	T1	D1	L1	L2	L3	L4	LX	LY	DB	Bolts (metr.)	O-ring	Weight (steel) kg/piece	Order code*	PN (bar)[1]) CF
0.5	26.0	3/8	11	31	17	9.0	30	26.0	13.0	5.5	M 05×18	15.60×1.78	0.17	**BFW3-G38/LK26**	315
0.5	26.0	1/2	11	31	17	9.0	30	26.0	13.0	5.5	M 05×18	15.60×1.78	0.18	**BFW3-G12/LK26**	315
1.0	30.0	3/8	12	31	17	9.0	30	30.0	15.0	6.5	M 06×20	15.88×2.62	0.19	**BFW3-G38/LK30**	315
1.0	30.0	1/2	12	31	17	9.0	30	30.0	15.0	6.5	M 06×20	15.88×2.62	0.18	**BFW3-G12/LK30**	315
2.0	40.0	1/2	18	36	23	11.5	36	40.0	20.0	8.5	M 08×25	23.81×2.62	0.37	**BFW3-G12/LK40**	315
2.0	40.0	3/4	19	36	23	11.5	36	40.0	20.0	8.5	M 08×25	23.81×2.62	0.33	**BFW3-G34/LK40**	315
3.0	51.0	3/4	24	46	26	13.0	45	51.0	25.5	10.5	M 10×30	29.75×3.53	0.67	**BFW3-G34/LK51**	315
3.0	51.0	1	24	46	26	13.0	45	51.0	25.5	10.5	M 10×30	29.75×3.53	0.56	**BFW3-G1/LK51**	315
3B	56.0	3/4	24	46	26	13.0	45	56.0	28.0	10.5	M 10×30	29.75×3.53	0.61	**BFW3-G34/LK56**	315
3B	56.0	1	24	46	26	13.0	45	56.0	28.0	10.5	M 10×30	29.75×3.53	0.57	**BFW3-G1/LK56**	315
3.5	62.0	1 1/4	31	55	35	14.0	55	62.0	31.0	10.5	M 10×30	37.69×3.53	0.95	**BFW3-G114/LK62**	315
3.5	62.0	1	25	55	35	14.0	55	62.0	31.0	10.5	M 10×30	37.69×3.53	1.00	**BFW3-G1/LK62**	315
3.5	62.0	1 1/4	31	55	35	14.0	55	62.0	31.0	13.0	M 12×35	37.69×3.53	0.95	**BFW3-G114/LK62/12**	315
3.5	62.0	1	25	55	35	14.0	55	62.0	31.0	13.0	M 12×35	37.69×3.53	1.20	**BFW3-G1/LK62/12**	315
4.0	72.5	1 1/2	38	58	38	15.0	62	72.5	36.2	13.0	M 12×35	47.22×3.53	1.12	**BFW3-G112/LK72.5**	315
4.0	72.5	1 1/4	31	58	38	15.0	62	72.5	36.2	13.0	M 12×35	47.22×3.53	1.14	**BFW3-G114/LK72.5**	315

[1]) Pressure shown = Item deliverable

$\frac{\text{PN (bar)}}{10}$ = PN (MPa)

*Please add the **suffixes** below according to the material/surface required.

Order code suffixes			
Material	Suffix surface and material	Example incl. metr. bolts and O-ring	Standard sealing material (no additional suffix needed)
Steel, zinc plated, Cr(VI)-free	CF	BFW3-G38/LK26CFM	NBR

Kovalent

PWDS-G Gear pump flange 90° elbow 4 holes – aluminium

Hydraulic flange / Female BSPP thread
(ISO 1179-1)

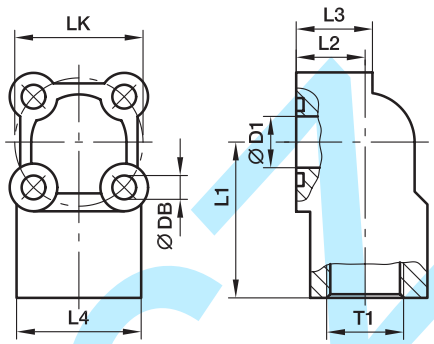

PWDS-G 90° Female BSPP thread

LK	T1	D1	L1	L2	L3	L4	DB	Bolts 2 pieces (metr.)	Bolts 2 pieces (metr.)	O-ring	Weight (steel) kg/piece	Order code*	PN (bar)[1] A
30	**G 3/8**	11.5	39.0	18	20	33	6.5	M 06×30	M 06×40	15.88×2.62	0.14	**PWDS-G38/LK30**	180
30	**G 1/2**	11.5	39.0	18	20	33	6.5	M 06×30	M 06×40	15.88×2.62	0.14	**PWDS-G12/LK30**	180
35	**G 3/8**	14.0	42.5	18	20	34	6.5	M 06×30	M 06×40	18.72×2.62	0.16	**PWDS-G38/LK35**	180
35	**G 1/2**	14.0	42.5	18	20	34	6.5	M 06×30	M 06×40	18.72×2.62	0.15	**PWDS-G12/LK35**	180
40	**G 1/2**	18.0	47.5	24	28	41	6.5	M 06×40	M 06×50	22.22×2.62	0.25	**PWDS-G12/LK40**	180
40	**G 3/4**	18.0	47.5	24	28	41	6.5	M 06×40	M 06×50	22.22×2.62	0.24	**PWDS-G34/LK40**	180
55	**G 3/4**	24.5	54.0	29	31	49	8.5	M 08×45	M 08×60	29.75×3.53	0.45	**PWDS-G34/LK55**	180
55	**G 1**	24.5	54.0	29	31	49	8.5	M 08×45	M 08×60	29.75×3.53	0.43	**PWDS-G1/LK55**	180

[1]) Pressure shown = Item deliverable

$\frac{\text{PN (bar)}}{10}$ = PN (M0Pa)

*Please add the **suffixes** below according to the material/surface required.

Order code suffixes			
Material	Suffix surface and material	Example incl. metr. bolts and O-ring	Standard sealing material (no additional suffix needed)
Aluminium	A	PWDS-G38/LK30AM	NBR

kovaz.cz

PWDA Gear pump flange 90° elbow 3 holes – aluminium

Hydraulic flange / Female BSPP thread
(ISO 1179-1)

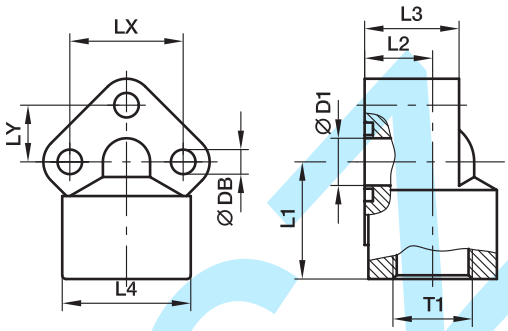

PWDA 90° Female BSPP thread

Pump size	LK	T1	D1	L1	L2	L3	L4	LX	LY	DB	Bolts (metr.)	O-ring	Weight (steel) kg/piece	Order code*	PN (bar)[1] A
0.5	26	**G 3/8**	10.0	31	18.0	25	31	26	13.0	5.5	M 05×35	14.00×1.78	0.10	**PWDA-05/38**	180
0.5	26	**G 1/2**	10.0	31	18.0	25	31	26	13.0	5.5	M 05×35	14.00×1.78	0.10	**PWDA-05/12**	180
1.0	30	**G 3/8**	12.5	31	18.0	26	34	30	15.0	6.5	M 06×35	15.88×2.62	0.13	**PWDA-1/38**	180
1.0	30	**G 1/2**	12.5	31	18.0	26	34	30	15.0	6.5	M 06×35	15.88×2.62	0.14	**PWDA-1/12**	180
2.0	40	**G 1/2**	18.0	40	21.5	31	42	40	20.0	8.5	M 08×45	22.22×2.62	0.26	**PWDA-2/12**	180
2.0	40	**G 3/4**	18.0	40	21.5	31	42	40	20.0	8.5	M 08×45	22.22×2.62	0.26	**PWDA-2/34**	180
3.0*	51 -56	**G 3/4**	24.5	46	26.0	42	49	51 -56	25.5 –28	11.0	M 10×60	29.75×3.53	0.52	**PWDA-3/34**	180
3.0*	51 -56	**G 1**	24.5	46	26.0	42	49	51 -56	25.5 –28	11.0	M 10×60	29.75×3.53	0.50	**PWDA-3/100**	180

[1]) Pressure shown = Item deliverable

*Oval drill hole

$\frac{\text{PN (bar)}}{10}$ = PN (MPa)

*Please add the **suffixes** below according to the material/surface required.

Order code suffixes			
Material	Suffix surface and material	Example incl. metr. bolts and O-ring	Standard sealing material (no additional suffix needed)
Aluminium	A	PWDA-05/38AM	NBR

kovaz.cl

PSFC Square flange

ISO 6164

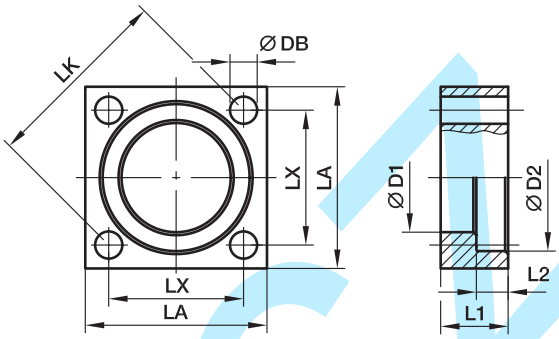

250 bar Series

Nom. flange size													PN (bar)[1] S
Series[2]	SAE (in.)	ISO (DN)	LK	D1	D2	L1	L2	LA	LX	DB	Weight (steel) kg/piece	Order code*	
L	3/8	10	35	18.5	25.0	18	6.2	40	24.7	6.6	0.19	**PSFC/L/10**	250
L	1/2	13	42	24.3	31.0	20	6.2	45	29.7	9.0	0.20	**PSFC/L/13**	250
L	3/4	19	50	32.2	38.9	22	6.2	50	35.4	9.0	0.23	**PSFC/L/19**	250
L	1	25	62	38.5	45.3	25	7.5	65	43.8	11.0	0.52	**PSFC/L/25**	250
L	1 1/4	32	73	43.7	51.6	30	7.5	75	51.6	13.5	0.82	**PSFC/L/32**	250
L	1 1/2	38	85	50.8	61.1	36	7.5	90	60.1	17.5	1.40	**PSFC/L/38**	250
L	2	51	98	62.8	72.3	40	9.0	100	69.3	17.5	1.77	**PSFC/L/51**	250
L	2 1/2	56	118	76.6	88.0	45	9.0	120	83.4	22.0	2.75	**PSFC/L/56**	250
L	3	63	145	90.8	102.3	52	9.0	140	102.5	22.0	4.47	**PSFC/L/63**	250
L	4	80	160	114.5	132.0	60	21.0	160	113.5	25.0	6.00	**PSFC/L/80**	250

400 bar Series

S	3/8	10	35	18.5	26.4	18	7.2	40	24.7	6.6	0.17	**PSFC/S/10**	400
S	1/2	13	42	24.7	32.6	20	7.2	45	29.7	9.0	0.20	**PSFC/S/13**	400
S	3/4	19	50	32.5	42.1	22	8.2	50	35.4	9.0	0.23	**PSFC/S/19**	400
S	1	25	62	38.9	48.4	25	9.0	65	43.8	11.0	0.50	**PSFC/S/25**	400
S	1 1/4	32	73	44.6	54.8	30	9.8	75	51.6	13.5	0.78	**PSFC/S/32**	400
S	1 1/2	38	85	51.6	64.3	36	12.0	90	60.1	17.5	1.33	**PSFC/S/38**	400
S	2	51	98	67.6	80.2	40	12.0	100	69.3	17.5	1.59	**PSFC/S/51**	400
S	2 1/2	56	118	80.5	95.0	50	16.1	120	83.4	22.0	2.98	**PSFC/S/56**	400
S	3	63	145	90.5	111.0	52	16.1	150	102.5	26.0	5.70	**PSFC/S/63**	400
S	3 1/2	70	160	102.5	120.0	60	17.5	160	113.1	26.0	6.57	**PSFC/S/70**	400
S	4	80	175	114.5	136.0	70	21.0	180	123.7	33.0	9.70	**PSFC/S/80**	350

[1] Pressure shown = Item deliverable

[2] L = light series; S = heavy series

$$\frac{\text{PN (bar)}}{10} = \text{PN (MPa)}$$

The pressures given here are the maximum allowable for the flange fittings. If the pipe or tube used has a lower pressure rating, then the welded assembly rating will be the lower one, assuming the weld is adequately strong.

*Please add the **suffixes** below according to the material/surface required.

Order code suffixes			
Material	Suffix surface and material	Example	Description
Steel, zinc plated, Cr(VI)-free	CF	PSFC/L/10CF	only flange clamp

PSFA-B Square flange adapter (butt weld)

Square flange / Butt weld end
(ISO 6164)

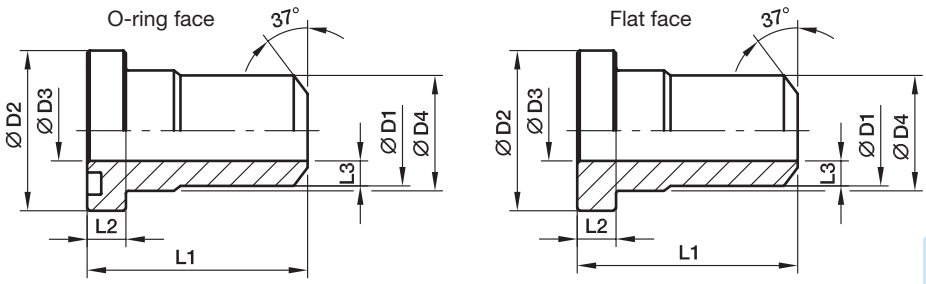

250 bar Series

Nom. flange size														PN
Se-ries[2])	SAE (in.)	ISO (DN)	D1	D2	D3	D4	L1	L2	L3	O-ring	Weight (steel) kg/piece	O-ring face Order code*	Flat face Order code*	(bar)[1]) S
L	3/8	10	17.5	24.5	10	18.0	40	6.8	3.75	17.13×2.62	0.09	**PSFA10/L/17.5B**	**PSCFA10/L/17.5B**	250
L	1/2	13	21.6	30.2	13	24.0	50	6.8	4.30	18.64×3.53	0.13	**PSFA13/L/21.6B**	**PSCFA13/L/21.6B**	250
L	3/4	19	27.2	38.1	19	31.5	60	6.8	4.10	24.99×3.53	0.22	**PSFA19/L/27.2B**	**PSCFA19/L/27.2B**	250
L	1	25	34.5	44.5	25	38.0	70	8.0	4.75	32.93×3.53	0.35	**PSFA25/L/34.5B**	**PSCFA25/L/34.5B**	250
L	1 1/4	32	43.0	50.8	31	43.0	80	8.0	6.00	37.89×3.53	0.50	**PSFA32/L/43B**	**PSCFA32/L/43B**	250
L	1 1/2	38	48.6	60.4	38	50.0	90	8.0	5.30	47.22×3.53	0.62	**PSFA38/L/48.6B**	**PSCFA38/L/48.6B**	250
L	2	51	61.0	71.4	50	62.0	100	9.6	5.50	56.74×3.53	0.88	**PSFA51/L/61B**	**PSCFA51/L/61B**	250
L	2 1/2	56	76.6	87.2	63	76.0	110	12.0	6.80	69.44×3.53	1.40	**PSFA56/L/76.6B**	**PSCFA56/L/76.6B**	250
L	3	63	89.0	101.6	70	90.0	120	15.0	9.50	85.32×3.53	2.57	**PSFA63/L/89B**	**PSCFA63/L/89B**	250
L	4	80	114.0	131.0	90	114.0	140	23.5	12.00	97.79×5.34	6.03	**PSFA80/L/114B**	**PSCFA80/L/114B**	250

400 bar Series

S	3/8	10	17.5	26.0	10	18.0	40	7.8	3.75	17.13×2.62	0.08	**PSFA10/S/17.5B**	**PSCFA10/S/17.5B**	400
S	1/2	13	21.6	31.8	13	24.0	50	7.8	4.30	18.64×3.53	0.14	**PSFA13/S/21.6B**	**PSCFA13/S/21.6B**	400
S	3/4	19	27.2	41.3	18	32.0	60	8.8	4.60	24.99×3.53	0.26	**PSFA19/S/27.2B**	**PSCFA19/S/27.2B**	400
S	1	25	34.5	47.6	22	38.0	70	9.5	6.25	32.93×3.53	0.45	**PSFA25/S/34.5B**	**PSCFA25/S/34.5B**	400
S	1 1/4	32	43.0	54.0	28	44.0	90	10.3	7.50	37.89×3.53	0.65	**PSFA32/S/43B**	**PSCFA32/S/43B**	400
S	1 1/2	38	48.6	63.5	32	51.0	90	12.6	8.30	47.22×3.53	0.99	**PSFA38/S/48.6B**	**PSCFA38/S/48.6B**	400
S	2	51	61.0	79.4	41	67.0	100	12.6	10.00	56.52×5.34	1.73	**PSFA51/S/61B**	**PSCFA51/S/61B**	400
S	2 1/2	56	76.6	94.2	50	90.0	110	16.5	13.30	69.22×5.34	2.70	**PSFA56/S/76.6B**	**PSCFA56/S/76.6B**	400
S	3	63	89.0	104.0	58	90.0	120	18.0	15.50	75.57×5.34	3.64	**PSFA63/S/89B**	**PSCFA63/S/89B**	400
S	3 1/2	70	102.0	119.0	63	102.0	130	20.0	19.50	85.09×5.34	5.55	**PSFA70/S/102B**	**PSCFA70/S/102B**	400
S	4	80	114.0	131.0	74	114.0	140	23.5	20.00	88.27×5.34	7.10	**PSFA80/S/114B**	**PSCFA80/S/114B**	350

[1]) Pressure shown = Item deliverable

[2]) L = light series; S = heavy series

$$\frac{\text{PN (bar)}}{10} = \text{PN (MPa)}$$

The pressures given here are the maximum allowable for the flange fittings. If the pipe or tube used has a lower pressure rating, then the welded assembly rating will be the lower one, assuming the weld is adequately strong.

*Please add the **suffixes** below according to the material/surface required.

Order code suffixes			
Material	Suffix surface and material	Example	Description
Steel, blanc oil dipped	S	PSFA10/L/17.5BS	only flange adapter

PSFP Square flange plug

ISO 6164

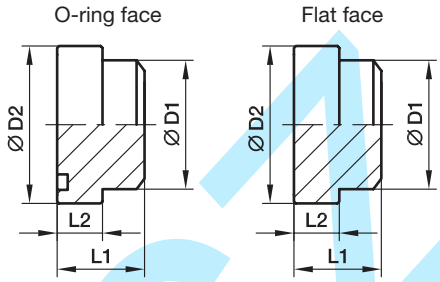

250 bar Series

Nom. flange size								Weight (steel) kg/piece	O-ring face Order code*	Flat face Order code*	PN (bar)[1] S
Series[2]	SAE (in.)	ISO (DN)	D1	D2	L1	L2	O-ring				
L	3/8	10	18.0	24.5	18.0	6.8	17.13×2.62	0.07	**PSFP10/L/18B**	**PSCFP10/L/18B**	250
L	1/2	13	24.0	30.2	20.0	6.8	18.64×3.53	0.08	**PSFP13/L/24B**	**PSCFP13/L/24B**	250
L	3/4	19	31.5	38.1	22.0	6.8	24.99×3.53	0.17	**PSFP19/L/31.5B**	**PSCFP19/L/31.5B**	250
L	1	25	38.0	44.5	25.0	8.0	32.93×3.53	0.24	**PSFP25/L/38B**	**PSCFP25/L/38B**	250
L	1 1/4	32	43.0	50.8	30.0	8.0	37.89×3.53	0.38	**PSFP32/L/43B**	**PSCFP32/L/43B**	250
L	1 1/2	38	50.0	60.4	36.0	8.0	47.22×3.53	0.63	**PSFP38/L/50B**	**PSCFP38/L/50B**	250
L	2	51	62.0	71.4	40.0	9.6	56.74×3.53	1.03	**PSFP51/L/62B**	**PSCFP51/L/62B**	250
L	2 1/2	56	76.0	87.2	45.0	12.0	69.44×3.53	1.75	**PSFP56/L/76B**	**PSCFP56/L/76B**	250
L	3	63	90.0	101.6	52.0	15.0	85.32×3.53	2.81	**PSFP63/L/90B**	**PSCFP63/L/90B**	250
L	4	80	114.0	131.0	61.5	23.5	97.79×5.34	4.50	**PSFP80/L/114B**	**PSCFP80/L/114B**	250

400 bar Series

S	3/8	10	18.0	26.0	18.0	7.8	17.13×2.62	0.08	**PSFP10/S/18B**	**PSCFP10/S/18B**	400
S	1/2	13	24.0	31.8	20.0	7.8	18.64×3.53	0.10	**PSFP13/S/24B**	**PSCFP13/S/24B**	400
S	3/4	19	32.0	41.3	22.0	8.8	24.99×3.53	0.19	**PSFP19/S/32B**	**PSCFP19/S/32B**	400
S	1	25	38.0	47.6	25.0	9.5	32.93×3.53	0.28	**PSFP25/S/38B**	**PSCFP25/S/38B**	400
S	1 1/4	32	44.0	54.0	30.0	10.3	37.89×3.53	0.43	**PSFP32/S/44B**	**PSCFP32/S/44B**	400
S	1 1/2	38	51.0	63.5	36.0	12.6	47.22×3.53	0.70	**PSFP38/S/51B**	**PSCFP38/S/51B**	400
S	2	51	67.0	79.4	40.0	12.6	56.52×5.34	1.28	**PSFP51/S/67B**	**PSCFP51/S/67B**	400
S	2 1/2	56	80.0	94.2	45.0	16.5	69.22×5.34	2.21	**PSFP56/S/80B**	**PSCFP56/S/80B**	400
S	3	63	90.0	104.0	52.0	18.0	75.57×5.34	2.80	**PSFP63/S/90B**	**PSCFP63/S/90B**	400
S	3 1/2	70	102.0	119.0	60.0	20.0	85.09×5.34	4.29	**PSFP70/S/102B**	**PSCFP70/S/102B**	400
S	4	80	114.0	131.0	70.0	23.5	88.27×5.34	4.50	**PSFP80/S/114B**	**PSCFP80/S/114B**	350

[1] Pressure shown = Item deliverable

[2] L = light series; S = heavy series

$$\frac{\text{PN (bar)}}{10} = \text{PN (MPa)}$$

The pressures given here are the maximum allowable for the flange fittings. If the pipe or tube used has a lower pressure rating, then the welded assembly rating will be the lower one, assuming the weld is adequately strong.

*Please add the **suffixes** below according to the material/surface required.

Order code suffixes			
Material	Suffix surface and material	Example	Description
Steel, blanc oil dipped	S	PSFP10/L/18BS	only flange plug

PSF-B Square flange (butt weld adapter coupling)

Square flange / Butt weld end
(ISO 6164)

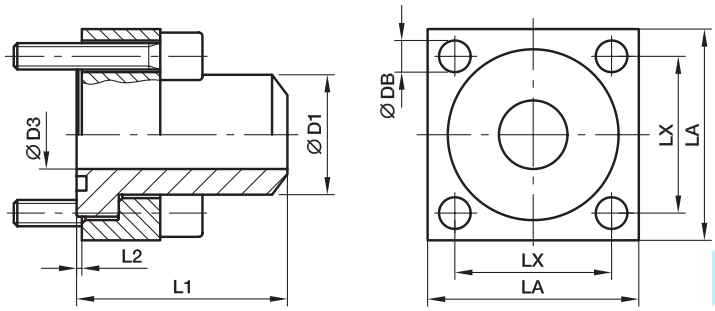

250 bar Series

Nom. flange size										Bolts		Weight (steel)		PN (bar)[1]
Series[2]	SAE (in.)	ISO (DN)	D1	D3	L1	L2	LA	LX	DB	(metr.)	O-ring	kg/piece	Order code*	S
L	3/8	10	17.5	10	40	0.4	40	24.7	6.6	M 06×30	17.13×2.62	0.25	**PSF10/L/17.5B**	250
L	1/2	13	21.6	13	50	0.4	45	29.7	9.0	M 08×35	18.64×3.53	0.30	**PSF13/L/21.6B**	250
L	3/4	19	27.2	19	60	0.4	50	35.4	9.0	M 08×35	24.99×3.53	0.53	**PSF19/L/27.2B**	250
L	1	25	34.5	25	70	0.5	65	43.8	11.0	M 10×40	32.93×3.53	0.98	**PSF25/L/34.5B**	250
L	1 1/4	32	43.0	31	80	0.5	75	51.6	13.5	M 12×50	37.89×3.53	1.53	**PSF32/L/43B**	250
L	1 1/2	38	48.6	38	90	0.5	90	60.1	17.5	M 16×60	47.22×3.53	2.52	**PSF38/L/48.6B**	250
L	2	51	61.0	50	100	0.6	100	69.3	17.5	M 16×70	56.74×3.53	3.23	**PSF51/L/61B**	250
L	2 1/2	56	76.6	63	110	3.0	120	83.4	22.0	M 20×80	69.44×3.53	5.82	**PSF56/L/76.6B**	250
L	3	63	89.0	70	120	6.0	140	102.5	22.0	M 20×90	85.32×3.53	8.19	**PSF63/L/89B**	250
L	4	80	114.0	90	140	2.5	160	113.5	25.0	M 24×100	97.79×5.34	12.45	**PSF80/L/114B**	250

400 bar Series

S	3/8	10	17.5	10	40	0.6	40	24.7	6.6	M 06×30	17.13×2.62	0.26	**PSF10/S/17.5B**	400
S	1/2	13	21.6	13	50	0.6	45	29.7	9.0	M 08×35	18.64×3.53	0.31	**PSF13/S/21.6B**	400
S	3/4	19	27.2	18	60	0.6	50	35.4	9.0	M 08×35	24.99×3.53	0.55	**PSF19/S/27.2B**	400
S	1	25	34.5	22	70	0.5	65	43.8	11.0	M 10×40	32.93×3.53	1.02	**PSF25/S/34.5B**	400
S	1 1/4	32	43.0	28	90	0.5	75	51.6	13.5	M 12×50	37.89×3.53	1.70	**PSF32/S/43B**	400
S	1 1/2	38	48.6	32	90	0.6	90	60.1	17.5	M 16×60	47.22×3.53	2.76	**PSF38/S/48.6B**	400
S	2	51	61.0	41	100	0.6	100	69.3	17.5	M 16×70	56.52×5.34	3.81	**PSF51/S/61B**	400
S	2 1/2	56	76.6	50	110	0.4	120	83.4	22.0	M 20×80	69.22×5.34	6.75	**PSF56/S/76.6B**	400
S	3	63	89.0	58	120	1.9	150	102.5	26.0	M 24×90	75.57×5.34	11.00	**PSF63/S/89B**	400
S	3 1/2	70	102.0	63	130	2.5	160	113.1	26.0	M 24×100	85.09×5.34	13.60	**PSF70/S/102B**	400
S	4	80	114.0	74	140	2.5	180	123.7	33.0	M 30×120	88.27×5.34	19.97	**PSF80/S/114B**	350

[1] Pressure shown = Item deliverable

[2] L = light series; S = heavy series

$$\frac{\text{PN (bar)}}{10} = \text{PN (MPa)}$$

The pressures given here are the maximum allowable for the flange fittings. If the pipe or tube used has a lower pressure rating, then the welded assembly rating will be the lower one, assuming the weld is adequately strong.

*Please add the **suffixes** below according to the material/surface required.

Order code suffixes			
Material	Suffix surface and material	Example incl. flange clamp, metr. bolts and O-ring	Standard sealing material (no additional suffix needed)
Steel, blanc oil dipped	S	PSF10/L/17.5BS	NBR

PDSF-B Square flange (butt weld connection)

Square flange / Butt weld tube end
(ISO 6164)

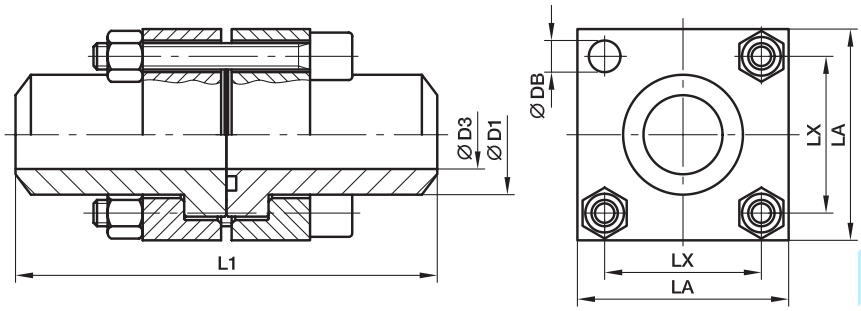

250 bar Series

Nom. flange size									Bolts		Weight (steel)		PN
Series[2]	SAE (in.)	ISO (DN)	D1	D3	L1	LA	LX	DB	(Metr.)	O-ring	kg/piece	Order code*	(bar)[1] S
L	3/8	10	17.5	10	80	40	24.7	6.6	M 06×45	17.13×2.62	0.50	**PDSF10/L/17.5B**	250
L	1/2	13	21.6	13	100	45	29.7	9.0	M 08×50	18.64×3.53	0.60	**PDSF13/L/21.6B**	250
L	3/4	19	27.2	19	120	50	35.4	9.0	M 08×55	24.99×3.53	1.06	**PDSF19/L/27.2B**	250
L	1	25	34.5	25	140	65	43.8	11.0	M 10×65	32.93×3.53	1.96	**PDSF25/L/34.5B**	250
L	1 1/4	32	43.0	31	160	75	51.6	13.5	M 12×75	37.89×3.53	3.06	**PDSF32/L/43B**	250
L	1 1/2	38	48.6	38	180	90	60.1	17.5	M 16×90	47.22×3.53	5.04	**PDSF38/L/48.6B**	250
L	2	51	61.0	50	200	100	69.3	17.5	M 16×100	56.74×3.53	6.46	**PDSF51/L/61B**	250
L	2 1/2	56	76.6	63	220	120	83.4	22.0	M 20×120	69.44×3.53	11.62	**PDSF56/L/76.6B**	250
L	3	63	89.0	70	240	140	102.5	22.0	M 20×140	85.32×3.53	16.38	**PDSF63/L/89B**	250
L	4	80	114.0	90	280	160	113.5	25.0	M 24×150	97.79×5.34	24.90	**PDSF80/L/114B**	250

400 bar Series

S	3/8	10	17.5	10	80	40	24.7	6.6	M 06×45	17.13×2.62	0.52	**PDSF10/S/17.5B**	400
S	1/2	13	21.6	13	100	45	29.7	9.0	M 08×50	18.64×3.53	0.62	**PDSF13/S/21.6B**	400
S	3/4	19	27.2	18	120	50	35.4	9.0	M 08×55	24.99×3.53	1.10	**PDSF19/S/27.2B**	400
S	1	25	34.5	22	140	65	43.8	11.0	M 10×65	32.93×3.53	2.04	**PDSF25/S/34.5B**	400
S	1 1/4	32	43.0	28	180	75	51.6	13.5	M 12×75	37.89×3.53	3.40	**PDSF32/S/43B**	400
S	1 1/2	38	48.6	32	180	90	60.1	17.5	M 16×90	47.22×3.53	5.52	**PDSF38/S/48.6B**	400
S	2	51	61.0	41	200	100	69.3	17.5	M 16×100	56.52×5.34	7.62	**PDSF51/S/61B**	400
S	2 1/2	56	76.6	50	220	120	83.4	22.0	M 20×130	69.22×5.34	13.50	**PDSF56/S/76.6B**	400
S	3	63	89.0	58	240	150	102.5	26.0	M 24×140	75.57×5.34	22.00	**PDSF63/S/89B**	400
S	3 1/2	70	102.0	63	260	160	113.1	26.0	M 24×150	85.09×5.34	27.20	**PDSF70/S/102B**	400
S	4	80	114.0	74	280	180	123.7	33.0	M 30×180	88.27×5.34	39.94	**PDSF80/S/114B**	350

[1] Pressure shown = Item deliverable

[2] L = light series; S = heavy series

$$\frac{\text{PN (bar)}}{10} = \text{PN (M Pa)}$$

The pressures given here are the maximum allowable for the flange fittings. If the pipe or tube used has a lower pressure rating, then the welded assembly rating will be the lower one, assuming the weld is adequately strong.

*Please add the **suffixes** below according to the material/surface required.

Order code suffixes			
Material	Suffix surface and material	Example Flange coupling incl. flange clamps, metr. bolts and O-ring	Standard sealing material (no additional suffix needed)
Steel, blanc oil dipped	S	PDSF10/L/17.5BS	NBR

Adapters

Visual index

NPTF Adapters Male/male	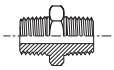 **FF** / p.O4	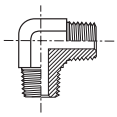 **CR** / p.O5	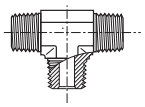 **RRS** / p.O5	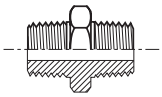 **FFFM** / p.O6		
NPTF Adapters Male/Female	**PTRM** / p.O7	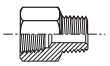 **FGM** / p.O8	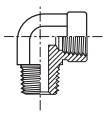 **CDM** / p.O9	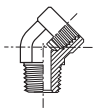 **CD45** / p.O10	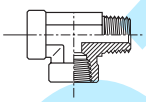 **MRO** / p.O11	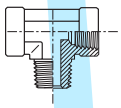 **MMS** / p.O12
NPTF Adapters Female/Female	**GG** / p.O13	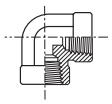 **DD** / p.O14	**DD45** / p.O14	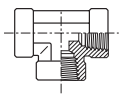 **MMO** / p.O15	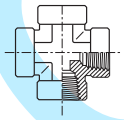 **KMMOO** / p.O15	
NPTF Plug	**HP** / p.O16	**HHP** / p.O16	UNF/NPTF Adapters	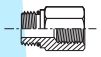 **F5OG** / p.O17	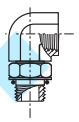 **AOEG** / p.O18	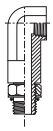 **AOE4G** / p.O18
UNF Adapters	**F5OG5** / p.O19	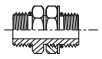 **F5OHAO** / p.O20	**G5G5JG5** / p.O20	UNF/ Plugs	**P5ONM** / p.O21	**HP5ON** / p.O22
BSPT-BSPP metric-UNF Conversion adapters	**F3HG5** / p.O23	**F4OHG5** / p.O24	**F8OHG5**/ p.O25			
Male/Male adapters BSPP 60° cone, BSPT, NPT	**HMK4** / p.O26	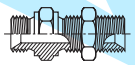 **WMK4WL4NM** / p.O27	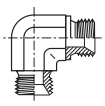 **EMK4** / p.O28	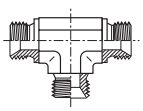 **JMK4** / p.O28	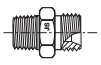 **F3MK4** / p.O38	**FMK4** / p.O40
Male/Female swivel adapters BSPP 60° cone	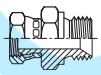 **F6MK4** / p.O30	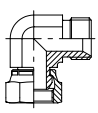 **C6MK4** / p.O31	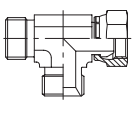 **R6MK4** / p.O32	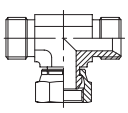 **S6MK4** / p.O33		
Female/Female swivel adapters BSPP 60° cone	**H6MK4** / p.O34	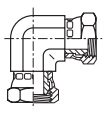 **E6MK4** / p.O35	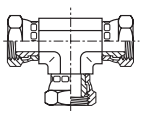 **J6MK4** / p.O36			

Kovaz.cz

Visual index

BSPP 60° cone Expander/Adapter cap	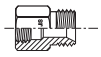 **G4MK4** / p.O37	**FNMK4** / p.O39	**PNMK4** / p.O29			
BSPP Adapters Female/Female	**GG44M** / p.O41	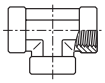 **MMO444M** / p.O42				
Reducing bushes BSPP/BSPT	**PTR34M** / p.O43	BSPT male union and plug	**FF33M** / p.O44	**HP3M** p.O45		
Female swivel NPSM / male NPTF	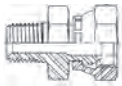 **0107** / p.O46	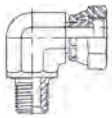 **2107** / p.O47	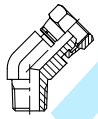 **3107** / p.O48			
Female swivel NPSM / female NPTF	**0207** / p.O49	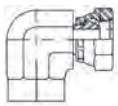 **2207** / p.O50				
Female swivel NPSM / male UNF	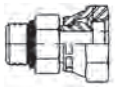 **0507** / p.O51	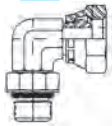 **2507** / p.O52	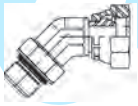 **3507** / p.O53			
JIS Adapters Male to BSPT	**F3T4** / p.O54	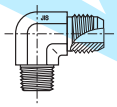 **C3T4** / p.O55	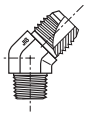 **V3T4** / p.O55	**JIS Unions**	**HP4** / p.O56	**HP46** / p.O56
JIS Adapters Female cone to BSPT	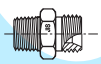 **F3P4** / p.O57	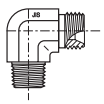 **C3P4** / p.O57	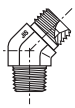 **V3P4** / p.O58	**F63P4** / p.O58	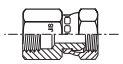 **G63P4** / p.O59	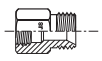 **G3P4** / p.O59
Seals/ Retaining ring	**Adapter Components** p.O60					

Kovaz.cz

O

Index

FF Male nipple

Male NPTF* thread (SAE J476) / Male NPTF* thread (SAE J476)
SAE 140137
*Stainless Steel = NPT to prevent galling

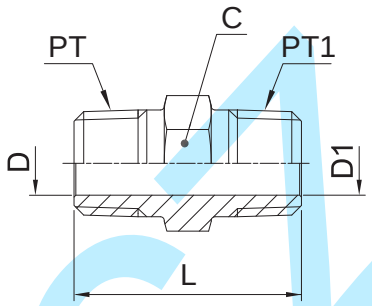

Thread NPT/NPTF PT	Thread NPT/NPTF PT1	C mm	D mm	D1 mm	L mm	Weight (steel) g/1 piece	Adapter Steel	Adapter Stainless Steel	PN (bar) S	PN (bar) SS
1/8-27	1/8-27	11.0	4.8	4.8	27	11	**1/8 FF-S**	**1/8FFMSS**	420	420
1/4-18	1/8-27	16.0	7.1	4.8	32	31	**1/4 X 1/8 FF-S**	**1/4X1/8FFMSS**	420	420
1/4-18	1/4-18	16.0	7.1	7.1	37	28	**1/4 FF-S**	**1/4FFMSS**	420	420
3/8-18	1/8-27	19.0	10.3	4.8	32	45	**3/8 X 1/8 FF-S**	**3/8X1/8FFMSS**	420	420
3/8-18	1/4-18	19.0	10.3	7.0	37	51	**3/8 X 1/4 FF-S**	**3/8X1/4FFMSS**	420	420
3/8-18	3/8-18	19.0	10.3	10.3	37	40	**3/8 FF-S**	**3/8FFMSS**	420	420
1/2-14	1/8-27	22.2	13.5	4.8	39	58	**1/2 X 1/8 FF-S**	**1/2X1/8FFMSS**	420	420
1/2-14	1/4-18	22.2	13.5	7.1	43	88	**1/2 X 1/4 FF-S**	**1/2X1/4FFMSS**	420	420
1/2-14	3/8-18	22.2	13.5	10.3	43	71	**1/2 X 3/8 FF-S**	**1/2X3/8FFMSS**	420	420
1/2-14	1/2-14	22.2	13.5	13.5	48	71	**1/2FFMS**	**1/2FFMSS**	420	420
3/4-14	1/4-18	28.6	18.3	7.1	45	104	**3/4 X 1/4 FF-S**	**3/4X1/4FFMSS**	380	380
3/4-14	3/8-18	28.6	18.3	10.3	45	134	**3/4 X 3/8 FF-S**	**3/4X3/8FFMSS**	380	380
3/4-14	1/2-14	28.6	18.3	13.5	50	161	**3/4 X 1/2 FF-S**	**3/4X1/2FFMSS**	380	380
3/4-14	3/4-14	28.6	18.3	18.3	50	104	**3/4 FF-S**	**3/4FFMSS**	380	380
1-11.5	1-11.5	35.0	23.8	23.8	59	179	**1 FF-S**	**1FFMSS**	380	380
1-11.5	1/4-18	35.0	23.8	7.1	50	188	**1 X 1/4 FF-S**	**1X1/4FFMSS**	380	380
1-11.5	3/4-14	35.0	23.8	18.3	53	195	**1 X 3/4 FF-S**	**1X3/4FFMSS**	380	380
1 1/4-11.5	1-11.5	44.5	31.8	23.8	62	256	**1 1/4 X 1 FF-S**	**11/4X1FFMSS**	350	350
1 1/4-11.5	1 1/4-11.5	44.5	31.8	31.8	63	256	**1 1/4 FF-S**	**11/4FFMSS**	350	350
1 1/2-11.5	1-11.5	50.8	38.1	23.8	65	341	**1 1/2 X 1 FF-S**	**11/2X1FFMX**	210	210
1 1/2-11.5	1 1/2-11.5	50.8	38.1	38.1	66	364	**1 1/2 FF-S**	**11/2FFMSS**	210	210
2-11.5	2-11.5	63.5	49.2	49.2	72	848	**2 FF-S**	**2FFMSS**	170	170

Order codes shown are part of our current manufacturing programme.

Imperial and metric parts may vary in hexagon dimensions.

$\frac{\text{PN (bar)}}{10} = \text{PN (MPa)}$

Do not create drawings from these dimensions, they are subject to change and ISO manufacturing allowances.

Kovel.cz

CR Male thread elbow

Male NPTF* thread (SAE J476) / Male NPTF* thread (SAE J476)
SAE 140237
*Stainless Steel = NPT to prevent galling

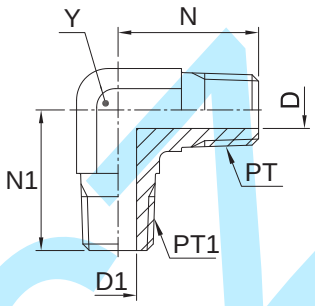

Thread NPT/NPTF PT	Thread NPT/NPTF PT1	D mm	D1 mm	N mm	N1 mm	Y mm	Weight (steel) g/1 piece	Adapter Steel	Adapter Stainless Steel	PN (bar) S	PN (bar) SS
1/8-27	1/8-27	4.8	4.8	20	20	11.0	27	**1/8 CR-S**	**1/8 CR-SS**	420	420
1/4-18	1/4-18	7.1	7.1	28	28	14.0	54	**1/4 CR-S**	**1/4 CR-SS**	420	420
3/8-18	3/8-18	10.3	10.3	31	31	19.0	181	**3/8 CR-S**	**3/8 CR-SS**	420	420
3/8-18	1/4-18	10.3	7.1	31	31	19.0	66	**3/8 X 1/4 CR-S**	**3/8 X 1/4 CR-SS**	420	420
1/2-14	1/2-14	13.5	13.5	37	37	22.0	172	**1/2 CR-S**	**1/2 CR-SS**	420	420
1/2-14	3/8-18	13.5	10.3	37	33	22.0	103	**1/2 X 3/8 CR-S**	**1/2 X 3/8 CR-SS**	420	420
3/4-14	3/4-14	18.3	18.3	40	40	27.0	263	**3/4 CR-S**	**3/4 CR-SS**	280	280
3/4-14	1/2-14	18.3	13.5	40	37	27.0	164	**3/4 X 1/2 CR-S**	**3/4 X 1/2 CR-SS**	280	280
1-11.5	1-11.5	23.8	23.8	50	50	33.3	462	**1 CR-S**	**1 CR-SS**	210	210
1 1/4-11.5	1 1/4-11.5	31.8	31.8	56	56	47.6	782	**1 1/4 CR-S**	**1 1/4 CR-SS**	170	170
1 1/2-11.5	1 1/2-11.5	38.1	38.1	59	59	47.6	782	**1 1/2 CR-S**	**1 1/2 CR-SS**	170	170

Do not create drawings from these dimensions, they are subject to change and ISO manufacturing allowances.

RRS Male thread tee

Male NPTF* thread (SAE J476)
SAE 140437
*Stainless Steel = NPT to prevent galling

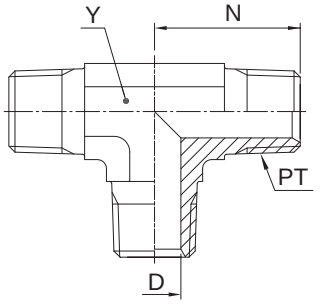

Thread NPT/NPTF PT	D mm	N mm	Y mm	Weight (steel) g/1 piece	Adapter Steel	Adapter Stainless Steel	PN (bar) S	PN (bar) SS
1/8-27	4.8	20	11	33	**1/8 RRS-S**	**1/8 RRS-SS**	420	420
1/4-18	7.1	28	14	56	**1/4 RRS-S**	**1/4 RRS-SS**	420	420
3/8-18	10.3	31	19	92	**3/8 RRS-S**	**3/8 RRS-SS**	420	420
1/2-14	13.5	37	22	96	**1/2 RRS-S**	**1/2 RRS-SS**	420	420
3/4-14	18.3	40	27	235	**3/4 RRS-S**	**3/4 RRS-SS**	280	280

Order codes shown are part of our current manufacturing programme.

Imperial and metric parts may vary in hexagon dimensions.

$\frac{\text{PN (bar)}}{10}$ = PN (MPa)

Do not create drawings from these dimensions, they are subject to change and ISO manufacturing allowances.

FFFM Extended male nipple

Male NPTF* thread (SAE J476) / Male NPTF* thread (SAE J476)
*Stainless Steel = NPT to prevent galling

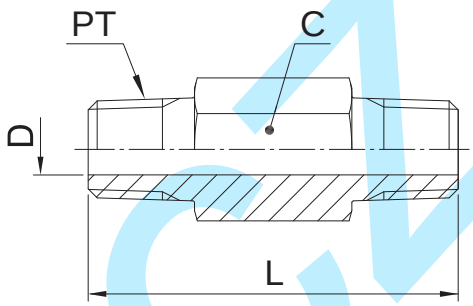

Thread NPT/NPTF PT	C mm	D mm	L mm	Weight (steel) g/1 piece	Adapter Steel	Adapter Stainless Steel	PN (bar) S	PN (bar) SS
1/8-27	11.0	4.8	38	23	**1/8 X 1.5 FFF-S**	**1/8X1.5FFFMSS**	420	420
1/8-27	11.0	4.8	51	33	**1/8 X 2.0 FFF-S**	**1/8X2.0FFFMSS**	420	420
1/8-27	11.0	4.8	64	41	**1/8 X 2.5 FFF-S**	**1/8X2.5FFFMSS**	420	420
1/8-27	11.0	4.8	76	50	**1/8 X 3.0 FFF-S**	**1/8X3.0FFFMSS**	420	420
1/4-18	16.0	7.1	38	35	**1/4 X 1.5 FFF-S**	**1/4X1.5FFFMSS**	420	420
1/4-18	16.0	7.1	51	51	**1/4 X 2.0 FFF-S**	**1/4X2.0FFFMSS**	420	420
1/4-18	16.0	7.1	64	72	**1/4 X 2.5 FFF-S**	**1/4X2.5FFFMSS**	420	420
1/4-18	16.0	7.1	76	93	**1/4 X 3.0 FFF-S**	**1/4X3.0FFFMSS**	420	420
1/4-18	16.0	7.1	102	110	**1/4 X 4.0 FFF-S**	**1/4X4.0FFFMSS**	420	420
1/2-14	22.2	13.5	51	91	**1/2 X 2.0 FFF-S**	**1/2X2.0FFFMSS**	420	420
1/2-14	22.2	13.5	76	151	**1/2 X 3.0 FFF-S**	**1/2X3.0FFFMSS**	420	420

Order codes shown are part of our current manufacturing programme.

Imperial and metric parts may vary in hexagon dimensions.

$\frac{\text{PN (bar)}}{10}$ = PN (MPa)

Do not create drawings from these dimensions, they are subject to change and ISO manufacturing allowances.

Kovaci

PTRM Thread reducer

Male NPTF* thread (SAE J476) / Female NPTF* thread (SAE J476)
SAE 140140
*Stainless Steel = NPT to prevent galling

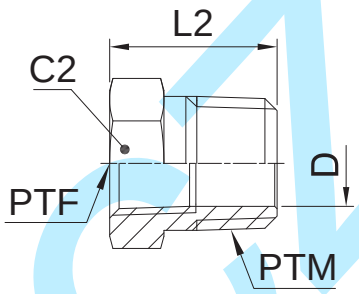

Thread NPT/NPTF PTM	Thread NPT/NPTF PTF	C2 mm	D mm	L2 mm	Weight (steel) g/1 piece	Adapter Steel	Adapter Stainless Steel	PN (bar) S	PN (bar) SS
1/4-18	1/8-27	16.0	8.3	22	24	**1/4 X 1/8 PTR-S**	**1/4X1/8PTRMSS**	420	420
3/8-18	1/8-27	19.0	8.3	22	25	**3/8 X 1/8 PTR-S**	**3/8X1/8PTRMSS**	420	420
3/8-18	1/4-18	19.0	10.7	22	25	**3/8 X 1/4 PTR-S**	**3/8X1/4PTRMSS**	420	420
1/2-14	1/8-27	22.2	8.3	28	58	**1/2 X 1/8 PTR-S**	**1/2X1/8PTRMSS**	420	350
1/2-14	1/4-18	22.2	10.7	28	53	**1/2 X 1/4 PTR-S**	**1/2X1/4PTRMSS**	420	350
1/2-14	3/8-18	22.2	13.5	28	40	**1/2 X 3/8PTR-S**	**1/2X3/8PTRMSS**	420	350
3/4-14	1/8-27	28.6	18.3	30	82	**3/4 X 1/8 PTR-S**	**3/4X1/8PTRMSS**	280	280
3/4-14	1/4-18	28.6	10.7	30	94	**3/4 X 1/4 PTR-S**	**3/4X1/4PTRMSS**	280	280
3/4-14	3/8-18	28.6	14.2	30	101	**3/4 X 3/8 PTR-S**	**3/4X3/8PTRMSS**	380	280
3/4-14	1/2-14	28.6	17.5	30	110	**3/4 X 1/2 PTR-S**	**3/4X1/2PTRMSS**	350	280
1-11.5	1/8-27	35.0	23.8	35	132	**1 X 1/8 PTR-S**	**1X1/8PTRMSS**	210	210
1-11.5	1/4-18	35.0	23.8	35	132	**1 X 1/4 PTR-S**	**1X1/4PTRMSS**	210	210
1-11.5	3/8-18	35.0	14.2	35	163	**1 X 3/8 PTR-S**	**1X3/8PTRMSS**	210	210
1-11.5	1/2-14	35.0	17.5	35	139	**1 X 1/2 PTR-S**	**1X1/2PTRMSS**	210	210
1-11.5	3/4-14	35.0	22.8	35	116	**1 X 3/4 PTR-S**	**1X3/4PTRMSS**	280	210
1 1/4-11.5	1/2-14	44.5	17.5	37	220	**1 1/4 X 1/2 PTR-S**	**11/4X1/2PTRMSS**	170	170
1 1/4-11.5	3/4-14	44.5	22.8	37	236	**1 1/4 X 3/4 PTR-S**	**11/4X3/4PTRMSS**	170	170
1 1/4-11.5	1-11.5	46.0	28.7	37	250	**1 1/4X1PTRMS**	**11/4X1PTRMSS**	210	175
1 1/2-11.5	3/4-14	50.8	22.8	40	306	**1 1/2 X 3/4 PTR-S**	**11/2X3/4PTRMSS**	140	140
1 1/2-11.5	1-11.5	50.0	29.0	40	360	**1 1/2X1PTRMS**	**11/2X1PTRMSS**	210	140
1 1/2-11.5	1 1/4-11.5	50.8	38.1	40	282	**1 1/2X1 1/4 PTR-S**	**11/2X11/4PTRMSS**	170	140
2-11.5	1/2-14	63.5	17.5	45	561	**2 X 1/2 PTR-S**	**2X1/2PTRMSS**	140	140
2-11.5	1-11.5	63.5	49.2	45	550	**2 X 1 PTR-S**	**2X1PTRMSS**	140	140
2-11.5	1 1/4-11.5	63.5	37.4	45	548	**2 X 1 1/4 PTR-S**	**2X11/4PTRMSS**	140	140

Order codes shown are part of our current manufacturing programme.

Imperial and metric parts may vary in hexagon dimensions.

$\frac{\text{PN (bar)}}{10}$ = PN (MPa)

Do not create drawings from these dimensions, they are subject to change and ISO manufacturing allowances.

O

FGM Thread expander / Adapter

Male NPTF* thread (SAE J476) / Female NPTF* thread (SAE J476)
SAE 140139
*Stainless Steel = NPT to prevent galling

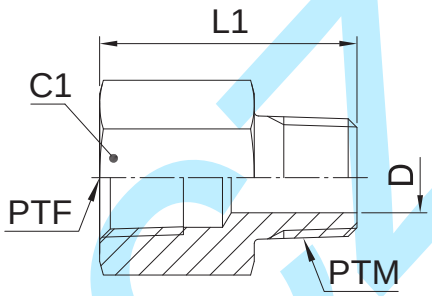

Thread NPT/NPTF PTF	Thread NPT/NPTF PTM	C1 mm	D mm	L1 mm	Weight (steel) g/1 piece	Adapter Steel	Adapter Stainless Steel	PN (bar) S	PN (bar) SS
1/8-27	1/8-27	16.0	4.8	26	30	**1/8 FG-S**	**1/8FGMSS**	420	420
1/4-18	1/8-27	19.0	4.8	31	57	**1/4 X 1/8 FG-S**	**1/4X1/8FGMSS**	420	420
1/4-18	1/4-18	19.0	7.1	35	44	**1/4 FG-S**	**1/4FGMSS**	420	420
3/8-18	1/8-27	22.2	4.8	32	50	**3/8 X 1/8 FG-S**	**3/8X1/8FGMSS**	420	420
3/8-18	1/4-18	22.2	7.1	37	108	**3/8 X 1/4 FG-S**	**3/8X1/4FGMSS**	420	420
3/8-18	3/8-18	22.2	10.3	37	55	**3/8 FG-S**	**3/8FGMSS**	420	420
1/2-14	1/8-27	28.6	4.8	38	98	**1/2 X 1/8 FG-S**	**1/2X1/8FGMSS**	350	350
1/2-14	1/4-18	28.6	7.1	43	104	**1/2 X 1/4 FG-S**	**1/2X1/4FGMSS**	350	350
1/2-14	3/8-18	28.6	10.3	43	108	**1/2 X 3/8 FG-S**	**1/2X3/8FGMSS**	350	350
1/2-14	1/2-14	28.6	13.5	48	108	**1/2 FG-S**	**1/2FGMSS**	350	350
3/4-14	3/4-14	35.0	18.3	49	178	**3/4 FG-S**	**3/4FGMSS**	280	280
3/4-14	1/4-18	35.0	7.1	45	129	**3/4 X 1/4 FG-S**	**3/4X1/4FGMSS**	280	280
3/4-14	1/2-14	35.0	13.5	49	129	**3/4 X 1/2FG-S**	**3/4X1/2FGMSS**	280	280
1-11.5	1-11.5	41.3	23.8	60	160	**1 FG-S**	**1FGMSS**	210	210
1-11.5	1/2-14	41.3	13.5	56	180	**1 X 1/2FG-S**	**1X1/2FGMSS**	210	210
1-11.5	3/4-14	41.3	18.3	55	98	**1 X 3/4FG-S**	**1X3/4FGMSS**	210	210
1 1/4-11.5	1-11.5	50.8	23.8	63	296	**1 1/4 X 1FG-S**	**11/4X1FGMSS**	170	170

Order codes shown are part of our current manufacturing programme.

Imperial and metric parts may vary in hexagon dimensions.

$\frac{\text{PN (bar)}}{10}$ = PN (MPa)

Do not create drawings from these dimensions, they are subject to change and ISO manufacturing allowances.

KOVAL

CDM Male female thread elbow

Male NPTF* thread (SAE J476) / Female NPTF* thread (SAE J476)
SAE 140239
*Stainless Steel = NPT to prevent galling

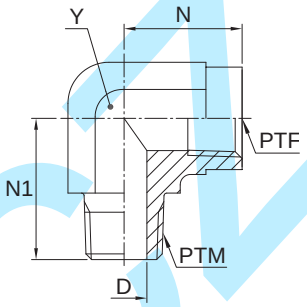

Thread NPT/NPTF PTM	Thread NPT/NPTF PTF	D mm	N mm	N1 mm	Y mm	Weight (steel) g/1 piece	Adapter Steel	Adapter Stainless Steel	PN (bar) S	PN (bar) SS
1/8-27	1/8-27	4.8	20	17	14.0	30	**1/8 CD-S**	**1/8 CD-SS**	350	350
1/4-18	1/4-18	7.0	28	22	19.0	77	**1/4CDMS**	**1/4 CD-SS**	350	350
1/4-18	1/8-27	7.1	28	17	14.0	33	**1/4 X 1/8 CD-S**	**1/4 X 1/8 CD-SS**	350	350
3/8-18	3/8-18	10.0	31	26	22.0	96	**3/8CDMS**	**3/8 CD-SS**	310	310
3/8-18	1/4-18	10.3	31	22	19.0	79	**3/8 X 1/4 CD-S**	**3/8 X 1/4 CD-SS**	350	350
3/8-18	1/2-14	10.3	33	31	27.0	260	**3/8 X 1/2 CD-S**	**3/8 X 1/2 CD-SS**	210	210
1/2-14	1/2-14	13.5	37	31	27.0	174	**1/2 CD-S**	**1/2 CD-SS**	210	210
1/2-14	3/8-18	13.5	38	32	22.0	96	**1/2 X 3/8 CD-S**	**1/2 X 3/8 CD-SS**	310	310
1/2-14	3/4-14	13.5	40	35	33.3	319	**1/2 X 3/4 CD-S**	**1/2 X 3/4 CD-SS**	210	210
3/4-14	3/4-14	18.3	40	35	33.3	285	**3/4 CD-S**	**3/4 CD-SS**	210	210
3/4-14	1/2-14	18.3	40	31	27.0	164	**3/4 X 1/2 CD-S**	**3/4 X 1/2 CD-SS**	210	210
1-11.5	1-11.5	23.8	50	41	47.6	515	**1 CD-S**	**1 CD-SS**	125	120
1 1/4-11.5	1 1/4-11.5	31.8	61	43	47.6	978	**1 1/4 CD-S**	**1 1/4 CD-SS**	100	100
1 1/2-11.5	1 1/2-11.5	38.1	67	53	63.5	1679	**1 1/2 CD-S**	**1 1/2 CD-SS**	100	100

Order codes shown are part of our current manufacturing programme.

Imperial and metric parts may vary in hexagon dimensions.

$\frac{\text{PN (bar)}}{10} = \text{PN (MPa)}$

Do not create drawings from these dimensions, they are subject to change and ISO manufacturing allowances.

O

Kovai.in

Index

CD45 Male female thread 45° elbow

Male NPTF* thread (SAE J476) / Female NPTF* thread (SAE J476)
SAE 140339
*Stainless Steel = NPT to prevent galling

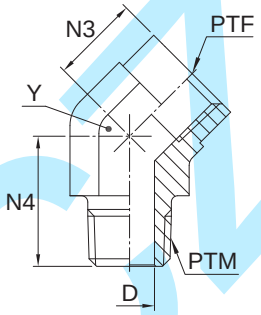

Thread NPT/NPTF PTM	Thread NPT/NPTF PTF	D mm	N3 mm	N4 mm	Y mm	Weight (steel) g/1 piece	Adapter Steel	Adapter Stainless Steel	PN (bar) S	PN (bar) SS
1/8-27	1/8-27	4.8	12	18	14.0	24	**1/8 CD45-S**	**1/8 CD45-SS**	350	350
1/4-18	1/4-18	7.1	16	27	19.0	57	**1/4 CD45-S**	**1/4 CD45-SS**	350	350
3/8-18	3/8-18	10.3	18	27	22.0	79	**3/8 CD45-S**	**3/8 CD45-SS**	310	310
1/2-14	1/2-14	13.5	23	34	27.0	141	**1/2 CD45-S**	**1/2 CD45-SS**	210	210
3/4-14	3/4-14	18.3	25	35	33.3	196	**3/4 CD45-S**	**3/4 CD45-SS**	210	210
1-11.5	1-11.5	23.8	29	44	41.0	380	**1 CD45-S**	**1 CD45-SS**	125	120
1 1/4-11.5	1 1/4-11.5	31.8	41	46	47.6	719	**1 1/4 CD45-S**	**1 1/4 CD45-SS**	100	100

Order codes shown are part of our current manufacturing programme.

Imperial and metric parts may vary in hexagon dimensions.

$\frac{\text{PN (bar)}}{10}$ = PN (MPa)

Do not create drawings from these dimensions, they are subject to change and ISO manufacturing allowances.

Kovaz.cz

MRO Male female thread tee

Male NPTF* thread (SAE J476) / Female NPTF* thread (SAE J476)
SAE 140424
*Stainless Steel = NPT to prevent galling

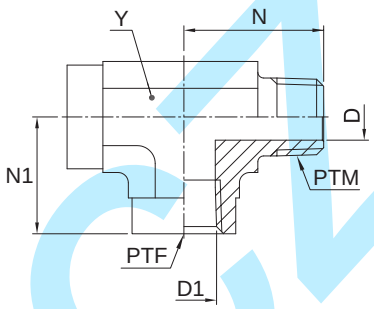

Thread NPT/NPTF PTM	Thread NPT/NPTF PTF	D mm	D1 mm	N mm	N1 mm	Y mm	Weight (steel) g/1 piece	Adapter Steel	Adapter Stainless Steel	PN (bar) S	PN (bar) SS
1/8-27	1/8-27	4.8	8.3	20	17	14.0	59	**1/8 MRO-S**	**1/8 MRO-SS**	350	350
1/4-18	1/4-18	7.1	10.7	28	22	19.0	115	**1/4 MRO-S**	**1/4 MRO-SS**	350	350
3/8-18	3/8-18	10.3	14.2	31	26	22.0	122	**3/8 MRO-S**	**3/8 MRO-SS**	310	310
1/2-14	1/2-14	13.5	17.5	37	31	27.0	285	**1/2 MRO-S**	**1/2 MRO-SS**	210	210
3/4-14	3/4-14	18.3	22.8	40	35	33.3	497	**3/4 MRO-S**	**3/4 MRO-SS**	210	210
1-11.5	1-11.5	23.8	28.6	50	41	41.0	987	**1 MRO-S**	**1 MRO-SS**	125	120

Order codes shown are part of our current manufacturing programme.

Imperial and metric parts may vary in hexagon dimensions.

$\frac{\text{PN (bar)}}{10}$ = PN (MPa)

Do not create drawings from these dimensions, they are subject to change and ISO manufacturing allowances.

O

kovaz.cz

MMS Male female thread tee

Male NPTF* thread (SAE J476) / Female NPTF* thread (SAE J476)
SAE 140425
*Stainless Steel = NPT to prevent galling

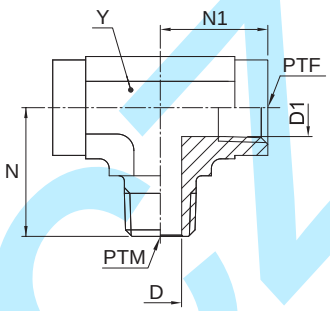

Thread NPT/NPTF PTM	Thread NPT/NPTF PTF	D mm	D1 mm	N mm	N1 mm	Y mm	Weight (steel) g/1 piece	Adapter Steel	Adapter Stainless Steel	PN (bar) S	PN (bar) SS
1/8-27	1/8-27	4.8	8.3	20	17	14.0	45	**1/8 MMS-S**	**1/8 MMS-SS**	350	350
1/4-18	1/4-18	7.1	10.7	28	22	19.0	118	**1/4 MMS-S**	**1/4 MMS-SS**	350	350
3/8-18	3/8-18	10.3	14.2	31	26	22.0	126	**3/8 MMS-S**	**3/8 MMS-SS**	310	310
1/2-14	1/2-14	13.5	17.5	37	31	27.0	272	**1/2 MMS-S**	**1/2 MMS-SS**	210	210
3/4-14	3/4-14	18.3	22.8	40	35	33.3	408	**3/4 MMS-S**	**3/4 MMS-SS**	210	210
1-11.5	1-11.5	23.8	28.6	50	41	41.0	606	**1 MMS-S**	**1 MMS-SS**	125	120

Order codes shown are part of our current manufacturing programme.

Imperial and metric parts may vary in hexagon dimensions.

$\frac{\text{PN (bar)}}{10}$ = PN (MPa)

Do not create drawings from these dimensions, they are subject to change and ISO manufacturing allowances.

kovaz.cz

GG Female thread coupling

Female NPTF* thread (SAE J476) / Female NPTF* thread (SAE J476)
SAE 140138
*Stainless Steel = NPT to prevent galling

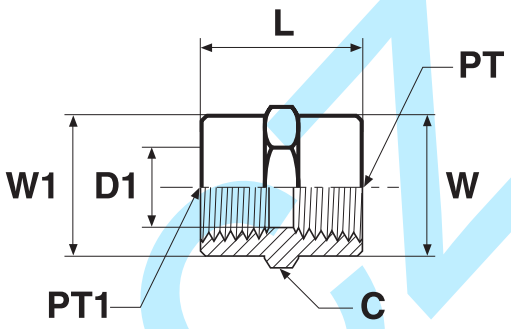

Thread NPT/NPTF PT	Thread NPT/NPTF PT1	C mm	D1 mm	L mm	W mm	W1 mm	Weight (steel) g/1 piece	Adapter Steel	Adapter Stainless Steel	PN (bar) S	PN (bar) SS
1/8-27	1/8-27	16.0	8.3	19	16	16	19	**1/8 GG-S**	**1/8 GG-SS**	420	420
1/4-18	1/8-27	19.0	8.3	24	19	16	35	**1/4 X 1/8 GG-S**	**1/4 X 1/8 GG-SS**	420	420
1/4-18	1/4-18	19.0	10.7	29	19	19	45	**1/4 GG-S**	**1/4 GG-SS**	420	420
3/8-18	1/8-27	22.2	8.3	26	22	16	56	**3/8 X 1/8 GG-S**	**3/8 X 1/8 GG-SS**	420	420
3/8-18	1/4-18	22.2	10.7	29	22	19	56	**3/8 X 1/4 GG-S**	**3/8 X 1/4 GG-SS**	420	420
3/8-18	3/8-18	22.2	14.2	29	22	22	62	**3/8 GG-S**	**3/8 GG-SS**	420	420
1/2-14	1/4-18	28.6	10.7	35	29	19	117	**1/2 X 1/4 GG-S**	**1/2 X 1/4 GG-SS**	350	350
1/2-14	3/8-18	28.6	14.2	38	29	22	100	**1/2 X 3/8 GG-S**	**1/2 X 3/8 GG-SS**	350	350
1/2-14	1/2-14	28.6	17.5	38	29	29	112	**1/2 GG-S**	**1/2 GG-SS**	350	350
3/4-14	1/4-18	35.0	10.7	39	35	19	150	**3/4 X 1/4 GG-S**	**3/4 X 1/4 GG-SS**	280	280
3/4-14	1/2-14	35.0	17.5	48	35	29	134	**3/4 X 1/2 GG-S**	**3/4 X 1/2 GG-SS**	280	280
3/4-14	3/4-14	35.0	22.8	39	35	35	156	**3/4 GG-S**	**3/4GG-SS**	280	280
1-11.5	1-11.5	41.3	28.6	48	41	41	289	**1 GG-S**	**1 GG-SS**	210	210
1-11.5	1/2-14	41.3	17.5	45	41	29	235	**1 X 1/2 GG-S**	**1 X 1/2 GG-SS**	210	210
1-11.5	3/4-14	41.3	22.8	45	41	35	239	**1 X 3/4 GG-S**	**1 X 3/4 GG-SS**	210	210
1 1/4-11.5	1 1/4-11.5	50.8	37.4	49	51	51	340	**1 1/4 GG-S**	**1 1/4 GG-SS**	170	170
1 1/4-11.5	1-11.5	50.8	28.6	49	51	41	182	**1 1/4 X 1 GG-S**	**1 1/4 X 1 GG-SS**	170	170
1 1/2-11.5	1 1/2-11.5	60.3	43.4	49	60	60	706	**1 1/2 GG-S**	**1 1/2 GG-SS**	140	140
1 1/2-11.5	1 1/4-11.5	60.3	37.4	49	60	60	531	**1 1/2 X 1 1/4 GG-S**	**1 1/2 X 1 1/4 GG-SS**	140	140
2-11.5	2-11.5	73.0	55.5	50	73	73	814	**2 GG-S**	**2 GG-SS**	140	140

Order codes shown are part of our current manufacturing programme.

Imperial and metric parts may vary in hexagon dimensions.

$\frac{\text{PN (bar)}}{10}$ = PN (MPa)

Do not create drawings from these dimensions, they are subject to change and ISO manufacturing allowances.

O

DD Female thread elbow

Female NPTF* thread (SAE J476)
SAE 140238
*Stainless Steel = NPT to prevent galling

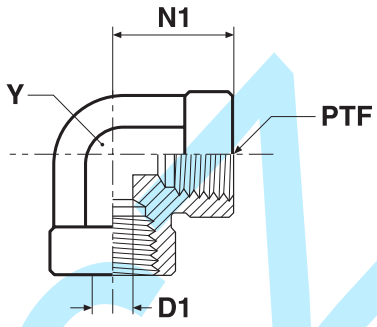

Thread NPT/NPTF PTF	D1 mm	N1 mm	Y mm	Weight (steel) g/1 piece	Adapter Steel	Adapter Stainless Steel	PN (bar) S	PN (bar) SS
1/8-27	8.3	17	14.0	28	**1/8 DD-S**	**1/8 DD-SS**	350	350
1/4-18	10.7	22	19.0	72	**1/4 DD-S**	**1/4 DD-SS**	350	350
3/8-18	14.2	26	22.0	96	**3/8 DD-S**	**3/8 DD-SS**	310	310
1/2-14	17.5	31	27.0	159	**1/2 DD-S**	**1/2 DD-SS**	210	210
3/4-14	22.8	35	33.3	263	**3/4 DD-S**	**3/4 DD-SS**	210	210
1-11.5	28.6	41	41.0	488	**1 DD-S**	**1 DD-SS**	125	120
1 1/4-11.5	37.4	43	47.6	978	**1 1/4 DD-S**	**1 1/4 DD-SS**	100	100
1 1/2-11.5	43.4	53	63.5	1889	**1 1/2 DD-S**	**1 1/2 DD-SS**	100	100

Do not create drawings from these dimensions, they are subject to change and ISO manufacturing allowances.

DD45 Female thread 45° elbow

Female NPTF* thread (SAE J476)
SAE 140338
*Stainless Steel = NPT to prevent galling

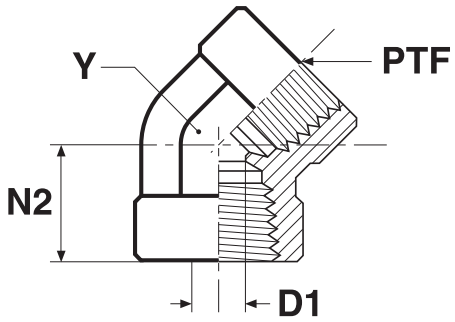

Thread NPT/NPTF PTF	D1 mm	N2 mm	Y mm	Weight (steel) g/1 piece	Adapter Steel	Adapter Stainless Steel	PN (bar) S	PN (bar) SS
1/8-27	8.3	12	14.0	27	**1/8 DD45-S**	**1/8 DD45-SS**	350	350
1/4-18	10.7	18	19.0	69	**1/4 DD45-S**	**1/4 DD45-SS**	350	350
3/8-18	14.2	19	22.0	97	**3/8 DD45-S**	**3/8 DD45-SS**	310	310
1/2-14	17.5	24	27.0	172	**1/2 DD45-S**	**1/2 DD45-SS**	210	210
3/4-14	22.8	25	33.3	248	**3/4 DD45-S**	**3/4 DD45-SS**	210	210
1-11.5	28.6	30	41.0	479	**1 DD45-S**	**1 DD45-SS**	125	120

Order codes shown are part of our current manufacturing programme.
Imperial and metric parts may vary in hexagon dimensions.

$\frac{\text{PN (bar)}}{10}$ = PN (MPa)

Do not create drawings from these dimensions, they are subject to change and ISO manufacturing allowances.

MMO Female thread tee

Female NPTF* threads (SAE J476)
SAE 140438
*Stainless Steel = NPT to prevent galling

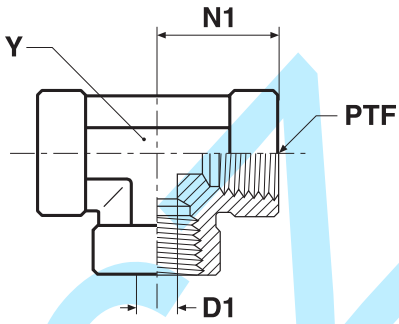

Thread NPT/NPTF PTF	D1 mm	N1 mm	Y mm	Weight (steel) g/1 piece	Adapter Steel	Adapter Stainless Steel	PN (bar) S	PN (bar) SS
1/8-27	8.3	17	14.0	36	**1/8 MMO-S**	**1/8 MMO-SS**	350	350
1/4-18	10.7	22	19.0	94	**1/4 MMO-S**	**1/4 MMO-SS**	350	350
3/8-18	14.2	26	22.0	121	**3/8 MMO-S**	**3/8 MMO-SS**	210	210
1/2-14	17.5	31	27.0	202	**1/2 MMO-S**	**1/2 MMO-SS**	210	210
3/4-14	22.8	35	33.3	312	**3/4 MMO-S**	**3/4 MMO-SS**	210	210
1-11.5	28.6	41	41.0	606	**1 MMO-S**	**1 MMO-SS**	125	120
1 1/4-11.5	37.4	43	47.6	576	**1 1/4 MMO-S**	**1 1/4 MMO-SS**	100	100
1 1/2-11.5	43.4	53	63.5	576	**1 1/2 MMO-S**	**1 1/2 MMO-SS**	100	100

Do not create drawings from these dimensions, they are subject to change and ISO manufacturing allowances.

KMMOO Female thread cross

Female NPTF* threads (SAE J476)
SAE 140538
*Stainless Steel = NPT to prevent galling

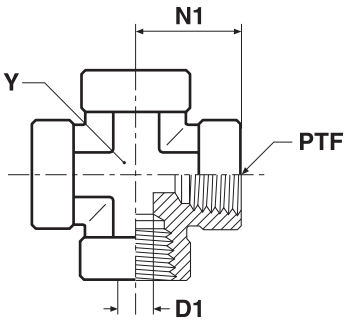

Thread NPT/NPTF PTF	D1 mm	N1 mm	Y mm	Weight (steel) g/1 piece	Adapter Steel	Adapter Stainless Steel	PN (bar) S	PN (bar) SS
1/8-27	8.3	17	14.0	45	**1/8 KMMOO-S**	**1/8 KMMOO-SS**	350	350
1/4-18	10.7	22	19.0	113	**1/4 KMMOO-S**	**1/4 KMMOO-SS**	350	350
3/8-18	14.2	26	22.0	147	**3/8 KMMOO-S**	**3/8 KMMOO-SS**	210	210
1/2-14	17.5	31	27.0	257	**1/2 KMMOO-S**	**1/2 KMMOO-SS**	210	210
3/4-14	22.8	35	33.3	382	**3/4 KMMOO-S**	**3/4 KMMOO-SS**	210	210
1-11.5	28.6	41	41.0	690	**1 KMMOO-S**	**1 KMMOO-SS**	125	120

Order codes shown are part of our current manufacturing programme.
Imperial and metric parts may vary in hexagon dimensions.

$\frac{\text{PN (bar)}}{10}$ = PN (MPa)

Do not create drawings from these dimensions, they are subject to change and ISO manufacturing allowances.

Index

HP Hexagon head plug

Male NPTF* Thread (SAE J476)
SAE 130109E
*Stainless Steel = NPT to prevent galling

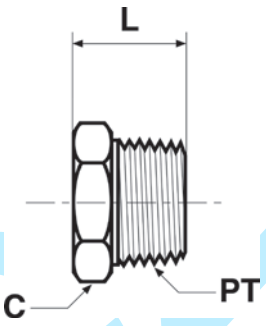

Thread NPT/NPTF PT	C mm	L mm	Weight (steel) g/1 piece	Adapter Steel	Adapter Stainless Steel	PN (bar) S	PN (bar) SS
1/8-27	11.0	14	19	**1/8 HP-S**	**1/8HPMSS**	420	420
1/4-18	14.3	19	22	**1/4 HP-S**	**1/4HPMSS**	420	420
3/8-18	17.5	20	28	**3/8 HP-S**	**3/8HPMSS**	420	420
1/2-14	22.2	24	72	**1/2 HP-S**	**1/2HPMSS**	420	420
3/4-14	27.0	27	119	**3/4 HP-S**	**3/4HPMSS**	380	380
1-11.5	33.3	32	218	**1 HP-S**	**1HPMSS**	380	380
1 1/4-11.5	44.5	36	217	**1 1/4 HP-S**	**11/4HPMSS**	345	345
1 1/2-11.5	50.8	38	300	**1 1/2 HP-S**	**11/2HPMSS**	210	210

Do not create drawings from these dimensions, they are subject to change and ISO manufacturing allowances.

HHP Hexagon socket plug

Male NPTF* thread (SAE J476)
SAE 130109N
*Stainless Steel = NPT to prevent galling

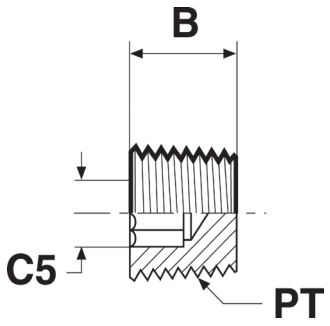

Thread NPT/NPTF PT	B mm	C5 inch	Weight (steel) g/1 piece	Adapter Steel	Adapter Stainless Steel	PN (bar) S	PN (bar) SS
1/16-27	8	5/32	2	**1/16 HHP-S**	**1/16 HHP-SS**	420	420
1/8-27	8	3/16	3	**1/8 HHP-S**	**1/8 HHP-SS**	420	420
1/4-18	12	1/4	7	**1/4 HHP-S**	**1/4 HHP-SS**	420	420
3/8-18	12	5/16	13	**3/8 HHP-S**	**3/8 HHP-SS**	420	420
1/2-14	16	3/8	16	**1/2 HHP-S**	**1/2 HHP-SS**	420	420
3/4-14	16	9/16	66	**3/4 HHP-S**	**3/4 HHP-SS**	380	380
1-11.5	20	5/8	73	**1 HHP-S**	**1 HHP-SS**	380	380
1 1/4-11.5	21	3/4	127	**1 1/4 HHP-S**	**1 1/4 HHP-SS**	210	345
1 1/2-11.5	21	3/4	168	**1 1/2 HHP-S**	**1 1/2 HHP-SS**	210	210
2-11.5	22	3/4	264	**2 HHP-S**	**2 HHP-SS**	140	170

Order codes shown are part of our current manufacturing programme.
Imperial and metric parts may vary in hexagon dimensions.

$\frac{\text{PN (bar)}}{10}$ = PN (MPa)

Do not create drawings from these dimensions, they are subject to change and ISO manufacturing allowances.

F5OG Male female thread adapter

Male UN/UNF thread – O-ring (ISO 11926) / Female NPTF* thread (SAE 476)
*Stainless Steel = NPT to prevent galling

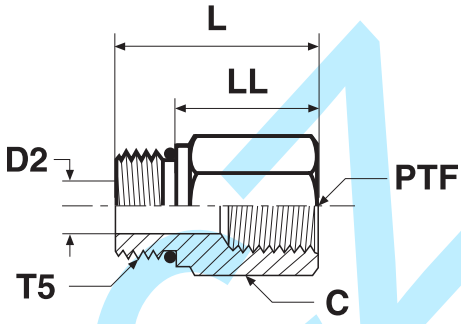

Thread UN/UNF-2A T5	Thread NPT/NPTF PTF	C mm	D2 mm	L mm	LL mm	Weight (steel) g/1 piece	Adapter Steel	Adapter Stainless Steel	PN (bar) S	PN (bar) SS
7/16-20	1/8-27	14.3	4.4	25	16	18	**4-1/8 F5OG-S**	**4-1/8 F5OG-SS**	420	420
7/16-20	1/4-18	19.0	4.4	30	20	36	**4-1/4 F5OG-S**	**4-1/4 F5OG-SS**	420	420
1/2-20	1/8-27	16.0	6.0	27	18	45	**5-1/8 F5OG-S**	**5-1/8 F5OG-SS**	420	420
1/2-20	1/4-18	19.0	6.0	30	21	55	**5-1/4 F5OG-S**	**5-1/4 F5OG-SS**	420	420
9/16-18	1/4-18	19.0	7.5	30	20	36	**6-1/4 F5OG-S**	**6-1/4 F5OG-SS**	420	420
3/4-16	1/4-18	22.2	9.9	29	18	53	**8-1/4 F5OG-S**	**8-1/4 F5OG-SS**	420	420
3/4-16	3/8-18	22.2	9.9	33	21	67	**8-3/8 F5OG-S**	**8-3/8 F5OG-SS**	420	420
3/4-16	1/2-14	28.6	9.9	38	27	98	**8-1/2 F5OG-S**	**8-1/2 F5OG-SS**	350	350
7/8-14	1/4-18	25.4	12.7	21	8	78	**10-1/4 F5OG-S**	**10-1/4 F5OG-SS**	380	380
7/8-14	3/8-18	25.4	12.7	33	21	77	**10-3/8 F5OG-S**	**10-3/8 F5OG-SS**	380	380
7/8-14	1/2-14	28.6	12.7	39	26	98	**10-1/2 F5OG-S**	**10-1/2 F5OG-SS**	350	350
7/8-14	3/4-14	35.0	12.7	41	29	153	**10-3/4 F5OG-S**	**10-3/4 F5OG-SS**	280	280
1 1/16-12	1/2-14	31.8	15.5	36	21	114	**12-1/2 F5OG-S**	**12-1/2 F5OG-SS**	350	350
1 1/16-12	3/4-14	35.0	15.5	44	29	150	**12-3/4 F5OG-S**	**12-3/4 F5OG-SS**	280	280
1 3/16-12	1/2-14	35.0	18.3	27	12	159	**14-1/2 F5OG-S**	**14-1/2 F5OG-SS**	280	280
1 3/16-12	3/4-14	35.0	18.3	43	28	167	**14-3/4 F5OG-S**	**14-3/4 F5OG-SS**	280	280
1 5/16-12	1/2-14	38.0	21.4	25	10	137	**16-1/2 F5OG-S**	**16-1/2 F5OG-SS**	280	280
1 5/16-12	3/4-14	38.0	21.4	38	23	189	**16-3/4 F5OG-S**	**16-3/4 F5OG-SS**	280	280
1 5/16-12	1-11.5	41.3	22.2	48	33	216	**16-1 F5OG-S**	**16-1 F5OG-SS**	210	210
1 5/8-12	1-11.5	47.6	27.5	25	10	151	**20-1 F5OG-S**	**20-1 F5OG-SS**	210	210
1 5/8-12	1 1/4-11.5	50.8	27.5	50	35	191	**20-1 1/4 F5OG-S**	**20-1 1/4 F5OG-SS**	170	170
1 7/8-12	1-11.5	54.0	34.1	25	10	612	**24-1 F5OG-S**	**24-1 F5OG-SS**	170	170
1 7/8-12	1 1/2-11.5	57.4	34.1	51	36	653	**24-1 1/2 F5OG-S**	**24-1 1/2 F5OG-SS**	140	140

Parker Adapter are delivered with NBR elastomeric seals as standard. For more details on other seal materials see page O60.

Order codes shown are part of our current manufacturing programme.

Imperial and metric parts may vary in hexagon dimensions.

$\frac{\text{PN (bar)}}{10} = \text{PN (MPa)}$

Do not create drawings from these dimensions, they are subject to change and ISO manufacturing allowances.

O

Index

AOEG Elbow

Male UN/UNF thread O-ring (ISO 11926) / Female NPTF thread (SAE 476)

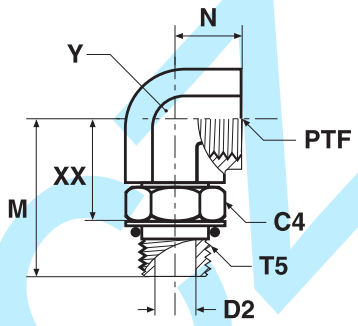

Thread UN/UNF-2A T5	Thread NPTF/NPTF PTF	C4 mm	D2 mm	M mm	N mm	XX mm	Y mm	Weight (steel) g/1 piece	Adapter Steel	PN (bar)
9/16-18	1/4-18	18	7.5	34	16	21	19	86	**6-1/4 AOEG-S**	350
3/4-16	3/8-18	22	9.9	37	16	24	22	100	**8-3/8 AOEG-S**	310
7/8-14	1/2-14	25	12.3	46	19	31	27	172	**10-1/2 AOEG-S**	210
1 1/16-12	3/4-14	32	15.5	51	21	34	33	274	**12-3/4 AOEG-S**	210
1 5/16-12	1-11.5	38	21.4	57	25	40	41	471	**16-1 AOEG-S**	125

Do not create drawings from these dimensions, they are subject to change and ISO manufacturing allowances.

AOE4G Extra long elbow

Male UN/UNF thread O-ring (ISO 11926) / Female NPTF thread (SAE 476)

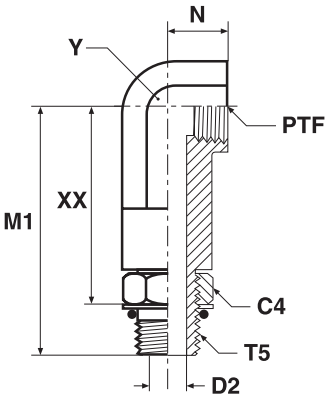

Thread UN/UNF-2A T5	Thread NPTF/NPTF PTF	C4 mm	D2 mm	M1 mm	N mm	XX mm	Y mm	Weight (steel) g/1 piece	Adapter Steel	PN (bar)
3/4-16	3/8-18	22	9.9	75	16	62	22.0	176	**8-3/8 AOE4G-S**	310
7/8-14	1/2-14	25	12.3	90	19	76	27.0	246	**10-1/2 AOE4G-S**	210
1 1/16-12	3/4-14	32	15.5	103	21	86	33.3	356	**12-3/4 AOE4G-S**	210
1 5/16-12	1-11.5	38	21.4	118	25	101	41.0	956	**16-1 AOE4G-S**	125

Parker Adapter are delivered with NBR elastomeric seals as standard. For more details on other seal materials see page O60.

Order codes shown are part of our current manufacturing programme.

Imperial and metric parts may vary in hexagon dimensions.

$\frac{\text{PN (bar)}}{10}$ = PN (MPa)

Do not create drawings from these dimensions, they are subject to change and ISO manufacturing allowances.

F5OG5 Thread reducer / Expander

Male UN/UNF threads – O-ring (ISO 11926)
SAE 090136

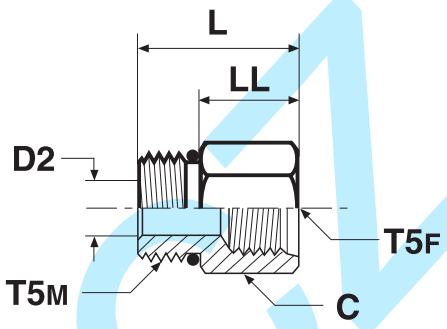

Thread UN/UNF-2A T5M	Thread UN/UNF-2B T5F	C mm	D2 mm	L mm	LL mm	Weight (steel) g/1 piece	Adapter Steel	Adapter Stainless Steel	PN (bar) S	PN (bar) SS
7/16-20	7/16-20	17.5	4.4	27	18	42	**4-4 F5OG5-S**	**4-4 F5OG5-SS**	500	315
7/16-20	9/16-18	20.6	4.4	30	20	49	**4-6 F5OG5-S**	**4-6 F5OG5-SS**	420	315
9/16-18	7/16-20	17.5	7.5	26	16	30	**6-4 F5OG5-S**	**6-4 F5OG5-SS**	500	315
9/16-18	3/4-16	27.0	7.5	35	25	64	**6-8 F5OG5-S**	**6-8 F5OG5-SS**	420	280
3/4-16	9/16-18	22.2	9.9	29	18	93	**8-6 F5OG5-S**	**8-6 F5OG5-SS**	420	315
3/4-16	7/8-14	28.6	9.9	40	29	73	**8-10 F5OG5-S**	**8-10 F5OG5-SS**	310	210
7/8-14	9/16-18	25.4	12.3	32	19	73	**10-6 F5OG5-S**	**10-6 F5OG5-SS**	420	350
7/8-14	3/4-16	25.4	12.3	33	21	75	**10-8 F5OG5-S**	**10-8 F5OG5-SS**	310	280
7/8-14	1 1/16-12	35.0	12.3	43	30	209	**10-12 F5OG5-S**	**10-12 F5OG5-SS**	310	245
1 1/16-12	3/4-16	31.8	15.5	37	22	114	**12-8 F5OG5-S**	**12-8 F5OG5-SS**	420	315
1 1/16-12	7/8-14	31.8	15.5	39	24	150	**12-10 F5OG5-S**	**12-10 F5OG5-SS**	350	210
1 1/16-12	1 5/16-12	41.3	15.5	48	33	170	**12-16 F5OG5-S**	**12-16 F5OG5-SS**	240	140
1 5/16-12	3/4-16	38.0	17.5	25	10	159	**16-8 F5OG5-S**	**16-8 F5OG5-SS**	310	310
1 5/16-12	7/8-14	38.0	20.6	25	10	240	**16-10 F5OG5-S**	**16-10 F5OG5-SS**	310	245
1 5/16-12	1 1/16-12	38.0	21.4	45	29	259	**16-12 F5OG5-S**	**16-12 F5OG5-SS**	310	245
1 5/16-12	1 5/8-12	54.0	21.4	50	35	280	**16-20 F5OG5-S**	**16-20 F5OG5-SS**	210	175
1 5/8-12	1 1/16-12	47.6	27.4	25	10	249	**20-12 F5OG5-S**	**20-12 F5OG5-SS**	280	210
1 5/8-12	1 5/16-12	47.6	27.4	44	29	249	**20-16 F5OG5-S**	**20-16 F5OG5-SS**	280	140
1 7/8-12	1 1/16-12	54.0	24.7	25	10	263	**24-12 F5OG5-S**	**24-12 F5OG5-SS**	210	140
1 7/8-12	1 5/16-12	54.0	30.9	25	10	268	**24-16 F5OG5-S**	**24-16 F5OG5-SS**	210	140
1 7/8-12	1 5/8-12	54.0	33.3	45	29	272	**24-20 F5OG5-S**	**24-20 F5OG5-SS**	210	140

Parker Adapter are delivered with NBR elastomeric seals as standard. For more details on other seal materials see page O60.

Order codes shown are part of our current manufacturing programme.

Imperial and metric parts may vary in hexagon dimensions.

$\frac{\text{PN (bar)}}{10} = \text{PN (MPa)}$

Do not create drawings from these dimensions, they are subject to change and ISO manufacturing allowances.

O

Index

F5OHAO Straight thread union

Male UN/UNF threads – O-ring (ISO 11926)

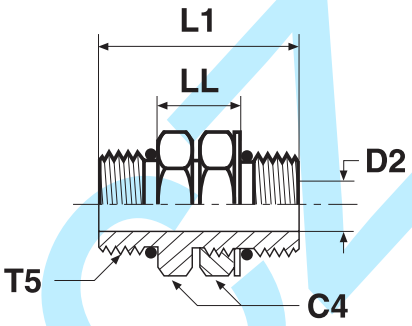

Thread UN/UNF-2A T5	C4 mm	D2 mm	L1 mm	LL mm	Weight (steel) g/1 piece	Adapter Steel	Adapter Stainless Steel	PN (bar) S	PN (bar) SS
7/16-20	14.3	5.2	32	13	25	**4 F5OHAO-S**	**4 F5OHAO-SS**	350	350
9/16-18	17.5	7.5	36	14	52	**6 F5OHAO-S**	**6 F5OHAO-SS**	350	350
3/4-16	22.2	10.7	42	18	76	**8 F5OHAO-S**	**8 F5OHAO-SS**	350	350
7/8-14	25.4	12.3	46	19	118	**10 F5OHAO-S**	**10 F5OHAO-SS**	310	310
1 1/16-12	31.8	15.5	54	22	213	**12 F5OHAO-S**	**12 F5OHAO-SS**	280	280
1 5/16-12	38.0	21.5	62	30	235	**16 F5OHAO-S**	**16 F5OHAO-SS**	210	210
1 5/8-12	47.6	27.4	62	30	367	**20 F5OHAO-S**	**20 F5OHAO-SS**	170	170
1 7/8-12	54.0	34.1	62	30	538	**24 F5OHAO-S**	**24 F5OHAO-SS**	140	140

Do not create drawings from these dimensions, they are subject to change and ISO manufacturing allowances.

G5G5JG5 Female straight thread tee

Female UN/UNF threads – all 3 ends

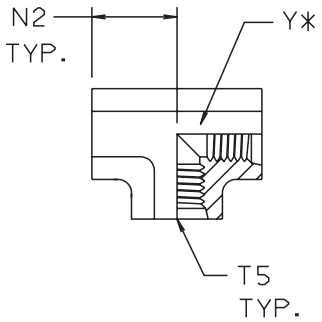

Thread UN/UNF-2B T5	N2 mm	Y mm	Weight (steel) g/1 piece	Adapter Steel	PN (bar)
7/16-20	19	19	68	**4 G5G5JG5-S**	350
9/16-18	22	22	47	**6 G5G5JG5-S**	350
3/4-16	26	27	228	**8 G5G5JG5-S**	350
7/8-14	30	27	228	**10 G5G5JG5-S**	310

Parker Adapter are delivered with NBR elastomeric seals as standard. For more details on other seal materials see page O60.
Order codes shown are part of our current manufacturing programme.
Imperial and metric parts may vary in hexagon dimensions.

$\frac{\text{PN (bar)}}{10} = \text{PN (MPa)}$

Do not create drawings from these dimensions, they are subject to change and ISO manufacturing allowances.

P5ONM Hexagon head plug

Male UN/UNF thread – O-ring (ISO 11926)
SAE 090109A

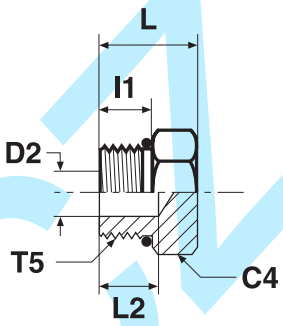

Thread UN/UNF-2A T5	C4 mm	D2 mm	I1 mm	L mm	L2 mm	Weight (steel) g/1 piece	Adapter Steel	Adapter Stainless Steel	PN (bar) S	PN (bar) SS
5/16-24	11.0	2.4	8	15	10	7	**2 P5ON-S**	**2P5ONMSS**	420	420
3/8-24	12.7	3.2	8	15	9	9	**3 P5ON-S**	**3P5ONMSS**	420	420
7/16-20	14.3	5.2	9	17	10	13	**4 P5ON-S**	**4P5ONMSS**	420	420
1/2-20	16.0	5.9	9	17	10	19	**5 P5ON-S**	**5P5ONMSS**	420	420
9/16-18	17.5	7.5	10	19	11	22	**6 P5ON-S**	**6P5ONMSS**	420	420
3/4-16	22.2	10.7	11	20	11	44	**8 P5ON-S**	**8P5ONMSS**	420	420
7/8-14	25.4	12.7	13	24	12	53	**10 P5ON-S**	**10P5ONMSS**	420	420
1 1/16-12	31.8	16.7	15	28	15	117	**12 P5ON-S**	**12P5ONMSS**	420	420
1 3/16-12	35.0	18.2	15	28	14	124	**14 P5ON-S**	**14P5ONMSS**	380	380
1 5/16-12	38.0	22.2	15	28	13	141	**16 P5ON-S**	**16P5ONMSS**	380	380
1 5/8-12	47.6	27.8	15	31	10	284	**20 P5ON-S**	**20P5ONMSS**	280	280
1 7/8-12	54.0	34.1	15	32	9	447	**24 P5ON-S**	**24P5ONMSS**	210	210
2 1/2-12	70.0	46.1	15	36	14	807	**32 P5ON-S**	**32P5ONMSS**	140	140

Parker Adapter are delivered with NBR elastomeric seals as standard. For more details on other seal materials see page O60.

Order codes shown are part of our current manufacturing programme.

Imperial and metric parts may vary in hexagon dimensions.

$\frac{\text{PN (bar)}}{10} = \text{PN (MPa)}$

Do not create drawings from these dimensions, they are subject to change and ISO manufacturing allowances.

O

HP5ON Hexagon socket plug

Male UN/UNF thread – O-ring (ISO 11926)
SAE 090109B

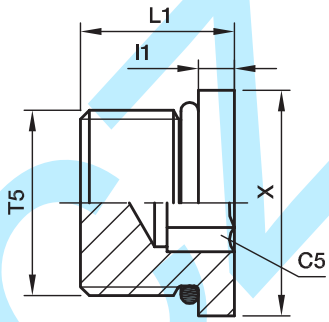

Thread UN/UNF-2A T5	C5 mm	l1 mm	L1 mm	X mm	Weight (steel) g/1 piece	Adapter Steel	Adapter Stainless Steel	PN (bar) S	PN (bar) SS
5/16-24	1/8	3	10	11	5	**2 HP5ON-S**	**2 HP5ON-SS**	420	420
3/8-24	5/32	3	10	13	5	**3 HP5ON-S**	**3 HP5ON-SS**	420	420
7/16-20	3/16	3	12	14	7	**4 HP5ON-S**	**4 HP5ON-SS**	420	420
1/2-20	7/32	3	12	16	10	**5 HP5ON-S**	**5 HP5ON-SS**	420	420
9/16-18	1/4	3	13	18	12	**6 HP5ON-S**	**6 HP5ON-SS**	420	420
3/4-16	5/16	4	15	22	26	**8 HP5ON-S**	**8 HP5ON-SS**	420	420
7/8-14	3/8	4	17	25	39	**10 HP5ON-S**	**10 HP5ON-SS**	420	420
1 1/16-12	9/16	5	20	32	64	**12 HP5ON-S**	**12 HP5ON-SS**	420	420
1 3/16-12	9/16	5	20	35	85	**14 HP5ON-S**	**14 HP5ON-SS**	380	380
1 5/16-12	5/8	5	20	38	103	**16 HP5ON-S**	**16 HP5ON-SS**	380	380
1 5/8-12	3/4	5	20	48	165	**20 HP5ON-S**	**20 HP5ON-SS**	280	280
1 7/8-12	3/4	5	20	54	238	**24 HP5ON-S**	**24 HP5ON-SS**	210	210

Parker Adapter are delivered with NBR elastomeric seals as standard. For more details on other seal materials see page O60.

Order codes shown are part of our current manufacturing programme.

Imperial and metric parts may vary in hexagon dimensions.

$\frac{\text{PN (bar)}}{10} = \text{PN (MPa)}$

Do not create drawings from these dimensions, they are subject to change and ISO manufacturing allowances.

Kovaal

F3HG5 Male female thread adapter

Male BSPT thread (ISO 7) / Female UN/UNF thread – O-ring (ISO 11926-1)

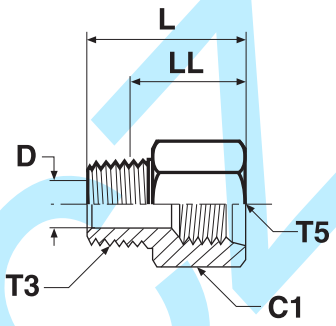

Thread BSPT T3	Thread UN/UNF-2B T5	C1 mm	D mm	L mm	Weight (steel) g/1 piece	Adapter Steel	Adapter Stainless Steel	PN (bar) S	PN (bar) SS
1/8-28	7/16-20	17.5	4.8	28	27	**1/8-4F3HG5S**	**1/8-4F3HMG5SS**	350	350
1/8-28	1/2-20	19.0	5.0	28	32	**1/8-5F3HG5S**	**1/8-5F3HMG5SS**	350	350
1/4-19	9/16-18	20.6	7.1	35	45	**1/4-6F3HG5S**	**1/4-6F3HMG5SS**	350	350
3-8/19	3/4-16	25.4	10.3	37	73	**3/8-8F3HG5S**	**3/8-8F3HMG5SS**	315	315
1/2-14	7/8-14	28.6	13.5	45	111	**1/2-10F3HG5S**	**1/2-10F3HMG5SS**	210	210
3/4-14	1 1/16-12	35.0	18.3	49	177	**3/4-12F3HG5S**	**3/4-12F3HMG5SS**	210	210
1-11	1 5/16-12	41.3	23.8	54	272	**1-16F3HG5S**	**1-16F3HMG5SS**	120	120

Order codes shown are part of our current manufacturing programme.

Imperial and metric parts may vary in hexagon dimensions.

$\frac{\text{PN (bar)}}{10}$ = PN (MPa)

Do not create drawings from these dimensions, they are subject to change and ISO manufacturing allowances.

O

Kovaz

F4OHG5 Male female thread adapter

Male BSPP thread O-ring + retaining ring (ISO 1179) /
Female UN/UNF thread – O-ring (ISO 11926-1)

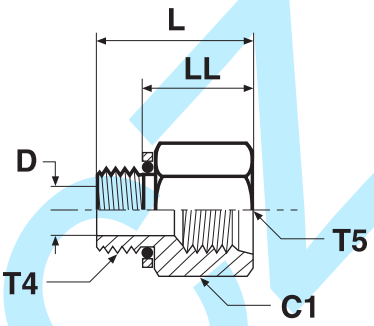

Thread BSPP T4	Thread UN/UNF-2B T5	C1 mm	D mm	L mm	LL mm	Weight (steel) g/1 piece	Adapter Steel	Adapter Stainless Steel	PN (bar) S	PN (bar) SS
1/8-28	7/16-20	17.5	4.4	25	19	27	**1/8-4F4OHG5S**	**1/8-4F4OHMG5SS**	350	315
1/4-19	7/16-20	19.0	7.5	28	17	40	**1/4-4F4OHG5S**	**1/4-4F4OHMG5SS**	350	315
1/4-19	9/16-18	20.6	7.5	32	22	45	**1/4-6F4OHG5S**	**1/4-6F4OHMG5SS**	350	315
3/8-19	9/16-18	22.2	9.9	32	22	70	**3/8-6F4OHG5S**	**3/8-6F4OHMG5SS**	350	315
3/8-19	3/4-16	25.4	9.9	34	24	73	**3/8-8F4OHG5S**	**3/8-8F4OHMG5SS**	350	280
1/2-14	7/8-14	28.6	12.3	41	28	111	**1/2-10F4OHG5S**	**1/2-10F4OHMG5SS**	240	240
3/4-14	1 1/16-12	35.0	15.5	44	32	177	**3/4-12F4OHG5S**	**3/4-12F4OHMG5SS**	240	240
1-11	1 5/16-12	44.5	21.4	49	33	272	**1-16F4OHG5S**	**1-16F4OHMG5SS**	240	210
1 1/4-11	1 5/8-12	50.8	27.4	50	33	320	**1 1/4-20F4OHG5S**	**11/4-20F4OHMG5SS**	140	140

Parker Adapter are delivered with NBR elastomeric seals as standard. For more details on other seal materials see page O60.

Order codes shown are part of our current manufacturing programme.

Imperial and metric parts may vary in hexagon dimensions.

$\frac{\text{PN (bar)}}{10}$ = PN (MPa)

Do not create drawings from these dimensions, they are subject to change and ISO manufacturing allowances.

Kovaco

F8OHG5 Male female thread adapter

Male metric thread O-ring + retaining ring / Female UN/UNF thread – O-ring (ISO 11926-1)

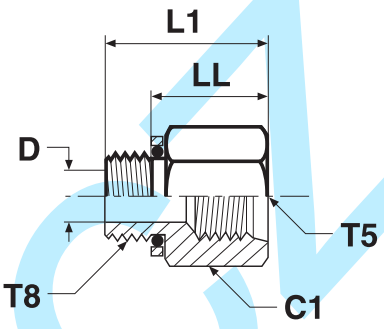

Thread Metric T8	Thread UN/UNF-2B T5	C1 mm	D mm	L1 mm	LL mm	Weight (steel) g/1 piece	Adapter Steel	Adapter Stainless Steel	PN (bar) S	PN (bar) SS
M 10×1.0	7/16-20	17.5	4	27	19	27	**M10-4F8OHG5S**	**M10-4F8OHG5SS**	350	315
M 14×1.5	9/16-18	20.6	7	30	22	45	**M14-6F8OHG5S**	**M14-6F8OHG5SS**	350	315
M 16×1.5	3/4-16	25.4	9	33	23	73	**M16-8F8OHG5S**	**M16-8F8OHG5SS**	350	280
M 22×1.5	7/8-14	28.6	13	38	25	111	**M22-10F8OHG5S**	**M22-10F8OHG5SS**	240	210
M 27×2.0	1 1/16-12	35.0	16	48	33	170	**M27-12F8OHG5S**	**M27-12F8OHG5SS**	240	210
M 33×2.0	1 5/16-12	41.3	22	49	34	250	**M33-16F8OHG5S**	**M33-16F8OHG5SS**	140	140
M 42×2.0	1 5/8-12	50.8	28	49	33	320	**M42-20F8OHG5S**	**M42-20F8OHG5SS**	140	140

Parker Adapter are delivered with NBR elastomeric seals as standard. For more details on other seal materials see page O60.

Order codes shown are part of our current manufacturing programme.

Imperial and metric parts may vary in hexagon dimensions.

$\frac{\text{PN (bar)}}{10} = \text{PN (MPa)}$

Do not create drawings from these dimensions, they are subject to change and ISO manufacturing allowances.

Kovaz

HMK4 Union

BSPP 60° Cone end (ISO 8434-6)

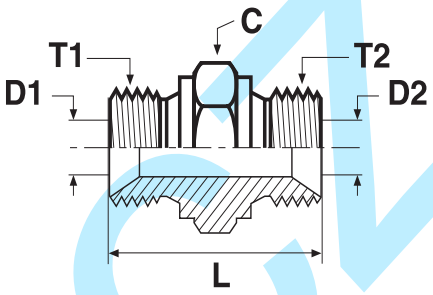

Thread BSPP T1	Thread BSPP T2	C mm	D1 mm	D2 mm	L mm	Weight (steel) g/1 piece	Adapter Steel	Adapter Stainless Steel	PN (bar) S	PN (bar) SS
1/8-28	1/8-28	14	3.5	3.5	24	15	**2HMK4S**	**2HMK4SS**	350	350
1/4-19	1/8-28	19	4.7	3.5	28	29	**4-2HMK4S**	**4-2HMK4SS**	350	350
1/4-19	1/4-19	19	4.7	4.7	32	35	**4HMK4S**	**4HMK4SS**	350	350
3/8-19	1/4-19	22	7.9	4.7	33	46	**6-4HMK4S**	**6-4HMK4SS**	350	350
3/8-19	3/8-19	22	7.9	7.9	35	51	**6HMK4S**	**6HMK4SS**	350	350
1/2-14	1/4-19	27	11.1	4.7	37	70	**8-4HMK4S**	**8-4HMK4SS**	200	200
1/2-14	3/8-19	27	11.1	7.9	38	76	**8-6HMK4S**	**8-6HMK4SS**	200	200
1/2-14	1/2-14	27	11.1	11.1	41	85	**8HMK4S**	**8HMK4SS**	200	200
5/8-14	1/2-14	30	14.3	11.1	43	106	**10-8HMK4S**	**10-8HMK4SS**	200	200
5/8-14	5/8-14	30	14.3	14.3	45	112	**10HMK4S**	**10HMK4SS**	200	200
3/4-14	1/4-19	32	16.7	4.7	39	92	**12-4HMK4S**	**12-4HMK4SS**	200	200
3/4-14	3/8-19	32	16.7	7.9	41	107	**12-6HMK4S**	**12-6HMK4SS**	200	200
3/4-14	1/2-14	32	16.7	11.1	43	111	**12-8HMK4S**	**12-8HMK4SS**	200	200
3/4-14	5/8-14	32	16.7	14.3	45	106	**12-10HMK4S**	**12-10HMK4SS**	200	200
3/4-14	3/4-14	32	16.7	16.7	45	124	**12HMK4S**	**12HMK4SS**	200	200
1-11	1/2-14	41	22.2	11.1	47	175	**16-8HMK4S**	**16-8HMK4SS**	120	120
1-11	5/8-14	41	22.2	14.3	49	188	**16-10HMK4S**	**16-10HMK4SS**	120	120
1-11	3/4-14	41	22.2	16.7	49	190	**16-12HMK4S**	**16-12HMK4SS**	120	120
1-11	1-11	41	22.2	22.2	52	199	**16HMK4S**	**16HMK4SS**	120	120
1 1/4-11	3/4-14	50	28.6	16.7	57	259	**20-12HMK4S**	**20-12HMK4SS**	105	105
1 1/4-11	1-11	50	28.6	22.2	60	383	**20-16HMK4S**	**20-16HMK4SS**	105	105
1 1/4-11	1 1/4-11	50	28.6	28.6	61	405	**20HMK4S**	**20HMK4SS**	105	105
1 1/2-11	3/4-14	55	33.3	16.7	61	501	**24-12HMK4S**	**24-12HMK4SS**	105	105
1 1/2-11	1-11	55	33.3	22.2	64	417	**24-16HMK4S**	**24-16HMK4SS**	105	105
1 1/2-11	1 1/4-11	55	33.3	28.6	65	410	**24-20HMK4S**	**24-20HMK4SS**	105	105
1 1/2-11	1 1/2-11	55	33.3	33.3	67	534	**24HMK4S**	**24HMK4SS**	105	105
2-11	1 1/2-11	70	46.0	33.3	73	660	**32-24HMK4S**	**32-24HMK4SS**	70	70
2-11	2-11	70	46.0	46.0	76	719	**32HMK4S**	**32HMK4SS**	70	70

Order codes shown are part of our current manufacturing programme.

Imperial and metric parts may vary in hexagon dimensions.

$\frac{\text{PN (bar)}}{10}$ = PN (MPa)

Do not create drawings from these dimensions, they are subject to change and ISO manufacturing allowances.

WMK4WL4NM Bulkhead union

BSPP 60° Cone end (ISO 8434-6)
*Supplied with locknut

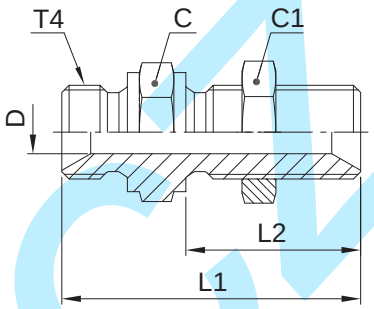

Thread BSPP T4	L1 mm	L2 mm	C mm	C1 mm	D mm	Weight (steel) g/1 piece	Adapter Steel	Adapter Stainless Steel	PN (bar) S	PN (bar) SS
1/4-19	49	28	19	19	4.7	57	**4WMK4WL4NMS**	**4WMK4WL4NMSS**	350	350
3/8-19	55	32	22	22	7.9	84	**6WMK4WL4NMS**	**6WMK4WL4NMSS**	350	350
1/2-14	62	35	27	27	11.1	122	**8WMK4WL4NMS**	**8WMK4WL4NMSS**	200	200
5/8-14	64	35	30	30	14.3	146	**10WMK4WL4NMS**	**10WMK4WL4NMSS**	200	200
3/4-14	67	38	32	36	16.7	209	**12WMK4WL4NMS**	**12WMK4WL4NMSS**	200	200
1-11	74	41	41	41	22.2	328	**16WMK4WL4NMS**	**16WMK4WL4NMSS**	120	120
1 1/4-11	85	44	50	50	28.6	507	**20WMK4WL4NMS**	**20WMK4WL4NMSS**	105	105
1 1/2-11	93	48	55	55	33.3	609	**24WMK4WL4NMS**	**24WMK4WL4NMSS**	105	105

Order codes shown are part of our current manufacturing programme.

Imperial and metric parts may vary in hexagon dimensions.

For the version without locknut, please delete “WL4NM” (e.g. 16WMK4)

$\frac{\text{PN (bar)}}{10}$ = PN (MPa)

Do not create drawings from these dimensions, they are subject to change and ISO manufacturing allowances.

O

Maximum bulkhead wallthickness

Thread BSPP	Bulkhead union Max. thickness mm
1/4	9.5
3/8	12.5
1/2	12.4
5/8	10.8
3/4	13.4
1	10.1
1 1/4	12.1
1 1/2	14.1

Novaz

Index

EMK4 Union elbow

BSPP 60° Cone end (ISO 8434-6)

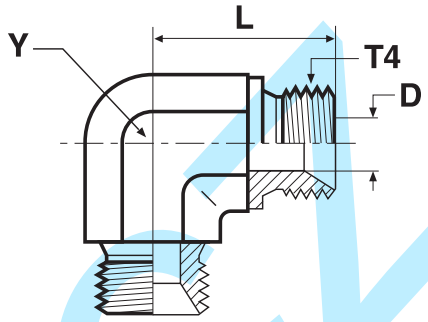

Thread BSPP T4	D mm	L mm	Y mm	Weight (steel) g/1 piece	Adapter Steel	Adapter Stainless Steel	PN (bar) S	PN (bar) SS
1/8-28	3.5	17	11	21	**2EMK4S**	**2EMK4SS**	350	350
1/4-19	4.7	24	14	45	**4EMK4S**	**4EMK4SS**	350	350
3/8-19	7.9	27	19	85	**6EMK4S**	**6EMK4SS**	350	350
1/2-14	11.1	32	22	123	**8EMK4S**	**8EMK4SS**	200	200
5/8-14	14.3	34	22	109	**10EMK4S**	**10EMK4SS**	200	200
3/4-14	16.7	36	27	178	**12EMK4S**	**12EMK4SS**	200	200
1-11	22.2	42	33	288	**16EMK4S**	**16EMK4SS**	120	120
1 1/4-11	28.6	48	41	512	**20EMK4S**	**20EMK4SS**	105	105
1 1/2-11	33.3	54	48	824	**24EMK4S**	**24EMK4SS**	105	105

Do not create drawings from these dimensions, they are subject to change and ISO manufacturing allowances.

JMK4 Union tee

BSPP 60° Cone end (ISO 8434-6)

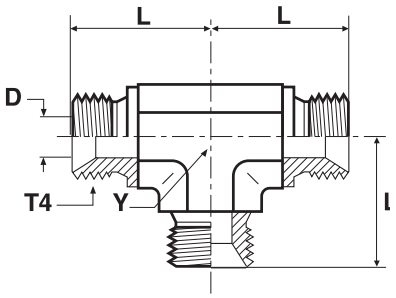

Thread BSPP T4	D mm	L mm	Y mm	Weight (steel) g/1 piece	Adapter Steel	Adapter Stainless Steel	PN (bar) S	PN (bar) SS
1/8-28	3.5	17	11	33	**2JMK4S**	**2JMK4SS**	350	350
1/4-19	4.7	24	14	61	**4JMK4S**	**4JMK4SS**	350	350
3/8-19	7.9	27	19	105	**6JMK4S**	**6JMK4SS**	350	350
1/2-14	11.1	32	22	157	**8JMK4S**	**8JMK4SS**	200	200
5/8-14	14.3	34	22	145	**10JMK4S**	**10JMK4SS**	200	200
3/4-14	16.7	36	27	258	**12JMK4S**	**12JMK4SS**	200	200
1-11	22.2	42	33	591	**16JMK4S**	**16JMK4SS**	120	120
1 1/4-11	28.6	48	41	646	**20JMK4S**	**20JMK4SS**	105	105
1 1/2-11	33.3	54	48	940	**24JMK4S**	**24JMK4SS**	105	105

Order codes shown are part of our current manufacturing programme.
Imperial and metric parts may vary in hexagon dimensions.

$\frac{\text{PN (bar)}}{10}$ = PN (MPa)

Do not create drawings from these dimensions, they are subject to change and ISO manufacturing allowances.

PNMK4 Plug

BSPP 60° Cone plug (ISO 8434-6)

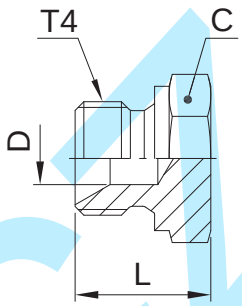

Thread BSPP T4	C mm	D mm	L mm	Weight (steel) g/1 piece	Adapter Steel	Adapter Stainless Steel	PN (bar) S	PN (bar) SS
1/8-28	14	3.5	14	11	**2PNMK4S**	**2PNMK4SS**	350	350
1/4-19	19	4.7	19	22	**4PNMK4S**	**4PNMK4SS**	350	350
3/8-19	22	7.9	21	38	**6PNMK4S**	**6PNMK4SS**	350	350
1/2-14	27	11.1	24	66	**8PNMK4S**	**8PNMK4SS**	200	200
5/8-14	30	14.3	27	76	**10PNMK4S**	**10PNMK4SS**	200	200
3/4-14	32	16.7	27	106	**12PNMK4S**	**12PNMK4SS**	200	200
1-11	41	22.2	30	170	**16PNMK4S**	**16PNMK4SS**	120	120
1 1/4-11	50	28.6	39	316	**20PNMK4S**	**20PNMK4SS**	105	105
1 1/2-11	55	33.3	43	386	**24PNMK4S**	**24PNMK4SS**	105	105
2-11	70	46.0	48	650	**32PNMK4S**	**32PNMK4SS**	70	70

Order codes shown are part of our current manufacturing programme.

Imperial and metric parts may vary in hexagon dimensions.

$\frac{\text{PN (bar)}}{10}$ = PN (MPa)

Do not create drawings from these dimensions, they are subject to change and ISO manufacturing allowances.

O

F6MK4 Swivel male stud

BSPP 60° cone end (ISO 8434-6) / BSPP 60° Female swivel end (ISO 8434-6)

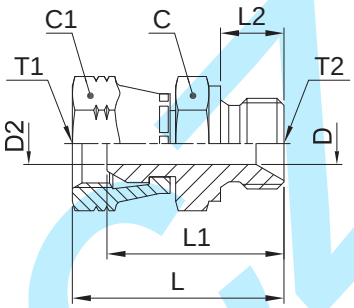

Thread BSPP T1	Thread BSPP T2	C mm	C1 mm	D mm	D2 mm	L mm	L1 mm	L2 mm	Weight (steel) g/1 piece	Adapter Steel	Adapter Stainless Steel	PN (bar) S	PN (bar) SS
1/4-19	1/4-19	19	19	4.7	4.7	37	31	11	44	**4-4F6MK4S**	**4-4F6MK4SS**	350	350
1/4-19	3/8-19	22	19	7.9	4.7	39	34	12	61	**4-6F6MK4S**	**4-6F6MK4SS**	350	350
1/4-19	1/2-14	27	19	11.1	4.7	42	36	14	75	**4-8F6MK4S**	**4-8F6MK4SS**	200	200
3/8-19	1/4-19	19	22	4.7	4.7	38	32	11	59	**6-4F6MK4S**	**6-4F6MK4SS**	350	350
3/8-19	3/8-19	22	22	7.9	7.9	40	34	12	71	**6-6F6MK4S**	**6-6F6MK4SS**	350	350
3/8-19	1/2-14	27	22	11.1	7.9	44	37	14	92	**6-8F6MK4S**	**6-8F6MK4SS**	200	200
1/2-14	3/8-19	22	27	7.9	7.9	44	37	12	102	**8-6F6MK4S**	**8-6F6MK4SS**	200	200
1/2-14	1/2-14	27	27	11.1	11.1	46	39	14	143	**8-8F6MK4S**	**8-8F6MK4SS**	200	200
1/2-14	3/4-14	32	27	16.7	11.1	49	42	16	157	**8-12F6MK4S**	**8-12F6MK4SS**	200	200
3/4-14	1/2-14	27	32	11.1	11.1	48	39	14	171	**12-8F6MK4S**	**12-8F6MK4SS**	200	200
3/4-14	3/4-14	32	32	16.7	16.7	50	41	16	165	**12-12F6MK4S**	**12-12F6MK4SS**	200	200
3/4-14	1-11	41	32	22.2	16.7	54	45	19	261	**12-16F6MK4S**	**12-16F6MK4SS**	120	120
1-11	3/4-14	32	41	16.7	16.7	54	43	16	250	**16-12F6MK4S**	**16-12F6MK4SS**	120	120
1-11	1-11	41	41	22.2	22.2	57	46	19	300	**16-16F6MK4S**	**16-16F6MK4SS**	120	120
1-11	1-11	50	50	28.6	28.6	71	61	20	528	**20-20F6MK4S**	**20-20F6MK4SS**	120	120

Order codes shown are part of our current manufacturing programme.

Imperial and metric parts may vary in hexagon dimensions.

$\frac{\text{PN (bar)}}{10}$ = PN (MPa)

Do not create drawings from these dimensions, they are subject to change and ISO manufacturing allowances.

Kovalcz

C6MK4 Swivel nut elbow

BSPP 60° cone end (ISO 8434-6) / BSPP 60° Female swivel end (ISO 8434-6)

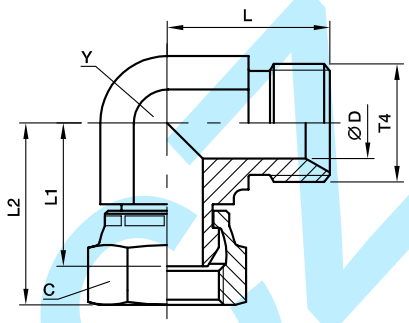

Thread BSPP T4	C mm	D mm	L mm	L1 mm	L2 mm	Y mm	Weight (steel) g/1 piece	Adapter Steel	Adapter Stainless Steel	PN (bar) S	PN (bar) SS
1/8-28	14	3.5	17	18	23	11	26	**2C6MK4S**	**2C6MK4SS**	350	350
1/4-19	19	4.7	24	25	31	14	62	**4C6MK4S**	**4C6MK4SS**	350	350
3/8-19	22	7.9	27	26	33	19	104	**6C6MK4S**	**6C6MK4SS**	350	350
1/2-14	27	11.1	32	32	39	22	159	**8C6MK4S**	**8C6MK4SS**	200	200
5/8-14	30	14.3	34	30	40	22	158	**10C6MK4S**	**10C6MK4SS**	200	200
3/4-14	32	16.7	36	33	42	27	226	**12C6MK4S**	**12C6MK4SS**	200	200
1-11	41	22.2	42	38	49	33	377	**16C6MK4S**	**16C6MK4SS**	120	120
1 1/4-11	50	28.6	48	48	58	41	650	**20C6MK4S**	**20C6MK4SS**	105	105
1 1/2-11	60	33.3	54	50	63	48	999	**24C6MK4S**	**24C6MK4SS**	105	105

Order codes shown are part of our current manufacturing programme.

Imperial and metric parts may vary in hexagon dimensions.

$\frac{\text{PN (bar)}}{10}$ = PN (MPa)

Do not create drawings from these dimensions, they are subject to change and ISO manufacturing allowances.

O

R6MK4 Swivel nut run tee

BSPP 60° Cone ends (ISO 8434-6) / BSPP 60° Female swivel end (ISO 8434-6)

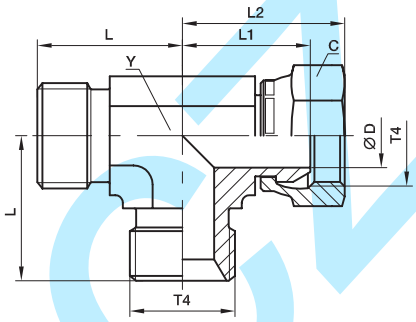

Thread BSPP T4	C mm	D mm	L mm	L1 mm	L2 mm	Y mm	Weight (steel) g/1 piece	Adapter Steel	Adapter Stainless Steel	PN (bar) S	PN (bar) SS
1/8-28	14	3.5	17	18	23	11	29	**2R6MK4S**	**2R6MK4SS**	350	350
1/4-19	19	4.7	24	25	31	14	77	**4R6MK4S**	**4R6MK4SS**	350	350
3/8-19	22	7.9	27	26	33	19	128	**6R6MK4S**	**6R6MK4SS**	350	350
1/2-14	27	11.1	32	32	39	22	203	**8R6MK4S**	**8R6MK4SS**	200	200
5/8-14	30	14.3	34	30	40	22	274	**10R6MK4S**	**10R6MK4SS**	200	200
3/4-14	32	16.7	36	33	42	27	274	**12R6MK4S**	**12R6MK4SS**	200	200
1-11	41	22.2	42	38	49	33	456	**16R6MK4S**	**16R6MK4SS**	120	120
1 1/4-11	50	28.6	48	48	58	41	801	**20R6MK4S**	**20R6MK4SS**	105	105

Order codes shown are part of our current manufacturing programme.

Imperial and metric parts may vary in hexagon dimensions.

$\frac{\text{PN (bar)}}{10}$ = PN (MPa)

Do not create drawings from these dimensions, they are subject to change and ISO manufacturing allowances.

Kovalca

S6MK4 Swivel nut branch tee

BSPP 60° Cone ends (ISO 8434-6) / BSPP 60° Female swivel end (ISO 8434-6)

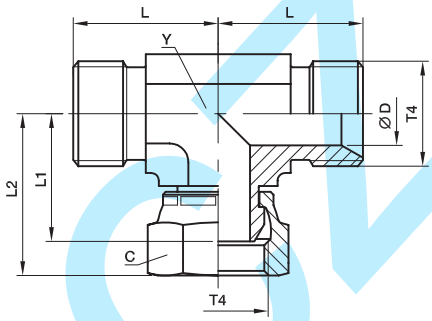

Thread BSPP T4	C mm	D mm	L mm	L1 mm	L2 mm	Y mm	Weight (steel) g/1 piece	Adapter Steel	Adapter Stainless Steel	PN (bar) S	PN (bar) SS
1/8-28	14	3.5	17	18	23	11	33	**2S6MK4S**	**2S6MK4SS**	350	350
1/4-19	19	4.7	24	25	31	14	77	**4S6MK4S**	**4S6MK4SS**	350	350
3/8-19	22	7.9	27	26	33	19	126	**6S6MK4S**	**6S6MK4SS**	350	350
1/2-14	27	11.1	32	32	39	22	191	**8S6MK4S**	**8S6MK4SS**	200	200
5/8-14	30	14.3	34	30	40	22	209	**10S6MK4S**	**10S6MK4SS**	200	200
3/4-14	32	16.7	36	33	42	27	286	**12S6MK4S**	**12S6MK4SS**	200	200
1-11	41	22.2	42	38	49	33	493	**16S6MK4S**	**16S6MK4SS**	120	120
1 1/4-11	50	28.6	48	48	58	41	796	**20S6MK4S**	**20S6MK4SS**	105	105

Order codes shown are part of our current manufacturing programme.

Imperial and metric parts may vary in hexagon dimensions.

$\frac{\text{PN (bar)}}{10}$ = PN (MPa)

Do not create drawings from these dimensions, they are subject to change and ISO manufacturing allowances.

O

kovaz.cz

H6MK4 Swivel nut union

BSPP 60° Female swivel ends (ISO 8434-6)

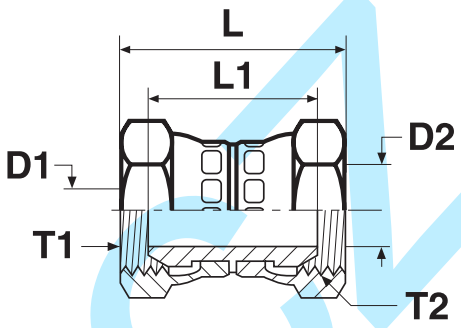

Thread BSPP T1	Thread BSPP T2	D1 mm	D2 mm	L mm	L1 mm	Weight (steel) g/1 piece	Adapter Steel	Adapter Stainless Steel	PN (bar) S	PN (bar) SS
1/4-19	1/4-19	4.7	4.7	38	27	50	**4H6MK4S**	**4H6MK4SS**	350	350
3/8-19	1/4-19	7.9	4.7	40	28	61	**6-4H6MK4S**	**6-4H6MK4SS**	350	350
3/8-19	3/8-19	7.9	7.9	42	29	73	**6H6MK4S**	**6H6MK4SS**	350	350
1/2-14	1/4-19	11.1	4.7	43	30	85	**8-4H6MK4S**	**8-4H6MK4SS**	200	200
1/2-14	3/8-19	11.1	7.9	44	31	96	**8-6H6MK4S**	**8-6H6MK4SS**	200	200
1/2-14	1/2-14	11.1	11.1	47	33	107	**8H6MK4S**	**8H6MK4SS**	200	200
5/8-14	5/8-14	14.3	14.3	48	29	130	**10H6MK4S**	**10H6MK4SS**	200	200
3/4-14	1/2-14	16.7	11.1	49	33	152	**12-8H6MK4S**	**12-8H6MK4SS**	200	200
3/4-14	3/4-14	16.7	16.7	50	32	167	**12H6MK4S**	**12H6MK4SS**	200	200
1-11	1-11	22.2	22.2	57	35	201	**16H6MK4S**	**16H6MK4SS**	120	120
1 1/4-11	1 1/4-11	28.6	28.6	66	45	340	**20H6MK4S**	**20H6MK4SS**	105	105
1 1/2-11	1 1/2-11	33.3	33.3	70	43	583	**24H6MK4S**	**24H6MK4SS**	105	105

Order codes shown are part of our current manufacturing programme.

Imperial and metric parts may vary in hexagon dimensions.

$$\frac{\text{PN (bar)}}{10} = \text{PN (MPa)}$$

Do not create drawings from these dimensions, they are subject to change and ISO manufacturing allowances.

Kovaľ.sk

E6MK4 Swivel nut elbow

BSPP 60° Female swivel ends (ISO 8434-6)

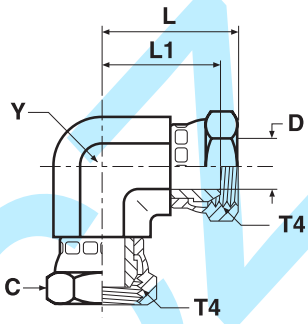

Thread BSPP T4	C mm	D mm	L mm	L1 mm	Y mm	Weight (steel) g/1 piece	Adapter Steel	Adapter Stainless Steel	PN (bar) S	PN (bar) SS
1/4-19	19	4.7	31	25	14	90	**4E6MK4S**	**4E6MK4SS**	350	350
3/8-19	22	7.9	33	26	19	127	**6E6MK4S**	**6E6MK4SS**	350	350
1/2-14	27	11.1	39	32	22	225	**8E6MK4S**	**8E6MK4SS**	200	200
5/8-14	30	14.3	39	30	22	203	**10E6MK4S**	**10E6MK4SS**	200	200
3/4-14	32	16.7	42	33	27	263	**12E6MK4S**	**12E6MK4SS**	200	200
1-11	41	22.2	49	38	33	667	**16E6MK4S**	**16E6MK4SS**	120	120
1 1/4-11	50	28.6	58	48	41	795	**20E6MK4S**	**20E6MK4SS**	105	105
1 1/2-11	60	33.3	63	50	48	1219	**24E6MK4S**	**24E6MK4SS**	105	105

Order codes shown are part of our current manufacturing programme.

Imperial and metric parts may vary in hexagon dimensions.

$\frac{\text{PN (bar)}}{10}$ = PN (MPa)

Do not create drawings from these dimensions, they are subject to change and ISO manufacturing allowances.

O

Kovaz.cz

J6MK4 Swivel nut tee

BSPP 60° Female swivel ends (ISO 8434-6)

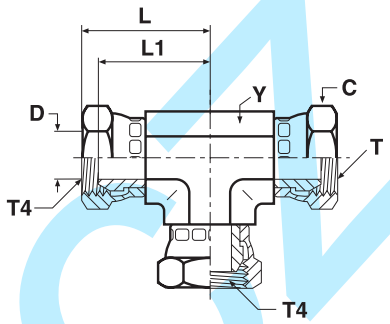

Thread BSPP T4	C mm	D mm	L mm	L1 mm	Y mm	Weight (steel) g/1 piece	Adapter Steel	Adapter Stainless Steel	PN (bar) S	PN (bar) SS
1/4-19	19	4.7	31	25	14	119	**4J6MK4S**	**4J6MK4SS**	350	350
3/8-19	22	7.9	33	26	19	195	**6J6MK4S**	**6J6MK4SS**	350	350
1/2-14	27	11.1	39	32	22	267	**8J6MK4S**	**8J6MK4SS**	200	200
5/8-14	30	14.3	39	30	22	300	**10J6MK4S**	**10J6MK4SS**	200	200
3/4-14	32	16.7	42	33	27	398	**12J6MK4S**	**12J6MK4SS**	200	200
1-11	41	22.2	49	38	33	620	**16J6MK4S**	**16J6MK4SS**	120	120
1 1/4-11	50	28.6	58	48	41	1050	**20J6MK4S**	**20J6MK4SS**	105	105

Order codes shown are part of our current manufacturing programme.

Imperial and metric parts may vary in hexagon dimensions.

$\frac{\text{PN (bar)}}{10}$ = PN (MPa)

Do not create drawings from these dimensions, they are subject to change and ISO manufacturing allowances.

Kovaz.cz

G4MK4 Female connector

BSPP 60° Cone end (ISO8434-6) / Female BSPP thread (ISO1179-1)

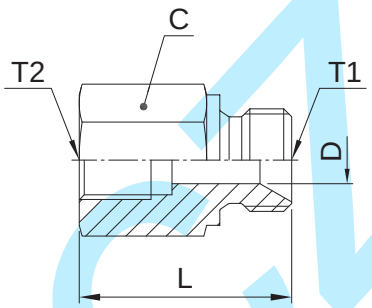

Thread BSPP T1	Thread BSPP T2	C mm	D mm	L mm	Weight (steel) g/1 piece	Adapter Steel	Adapter Stainless Steel	PN (bar) S	PN (bar) SS
1/4-19	1/4-19	19	4.7	34	47	**4-4G4MK4S**	**4-4G4MK4SS**	350	350
3/8-19	1/4-19	22	7.9	36	74	**6G4MK4S**	**6G4MK4SS**	350	350
3/8-19	3/8-19	27	7.9	35	75	**6-6G4MK4S**	**6-6G4MK4SS**	200	200
1/2-14	1/4-19	27	11.1	38	77	**8-4G4MK4S**	**8-4G4MK4SS**	200	200
1/2-14	3/8-19	27	11.1	40	102	**8G4MK4S**	**8G4MK4SS**	200	200
1/2-14	1/2-14	27	11.1	46	120	**8-8G4MK4S**	**8-8G4MK4SS**	200	200
3/4-14	1/4-19	32	16.7	40	180	**12-4G4MK4S**	**12-4G4MK4SS**	200	200
3/4-14	3/8-19	32	16.7	42	167	**12-6G4MK4S**	**12-6G4MK4SS**	200	200
3/4-14	1/2-14	32	16.7	48	209	**12-8G4MK4S**	**12-8G4MK4SS**	200	200
3/4-14	3/4-14	36	16.7	46	188	**12G4MK4S**	**12G4MK4SS**	200	200
1-11	1/4-19	41	22.2	43	298	**16-4G4MK4S**	**16-4G4MK4SS**	120	120
1-11	3/8-19	41	22.2	45	287	**16-6G4MK4S**	**16-6G4MK4SS**	120	120
1-11	1/2-14	41	22.2	51	275	**16-8G4MK4S**	**16-8G4MK4SS**	120	120
1-11	3/4-14	41	22.2	52	360	**16-12G4MK4S**	**16-12G4MK4SS**	120	120

Order codes shown are part of our current manufacturing programme.

Imperial and metric parts may vary in hexagon dimensions.

$\frac{\text{PN (bar)}}{10} = \text{PN (MPa)}$

Do not create drawings from these dimensions, they are subject to change and ISO manufacturing allowances.

O

Index

F3MK4 Male stud connector

BSPP 60° Cone end (ISO 8434-6) / Male BSPT thread (ISO 7)

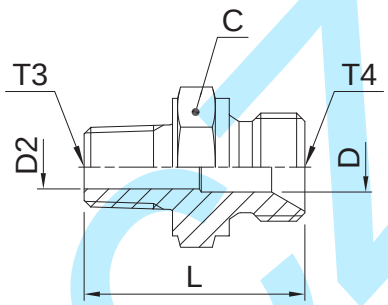

Thread BSPP T4	Thread BSPT T3	C mm	D mm	D2 mm	L mm	Weight (steel) g/1 piece	Adapter Steel	Adapter Stainless Steel	PN (bar) S	PN (bar) SS
1/8-28	1/8-28	14	3.5	3.5	25	15	**2F3MK4S**	**2F3MK4SS**	315	315
1/8-28	1/4-19	14	3.5	7.0	29	28	**2-4F3MK4S**	**2-4F3MK4SS**	315	315
1/4-19	1/4-19	19	4.7	4.7	34	31	**4-4F3MK4S**	**4-4F3MK4SS**	315	315
1/4-19	1/8-28	19	4.7	4.7	29	27	**4F3MK4S**	**4F3MK4SS**	315	315
1/4-19	3/8-19	19	4.7	10.0	34	44	**4-6F3MK4S**	**4-6F3MK4SS**	315	315
3/8-19	3/8-19	22	7.9	7.9	35	52	**6-6F3MK4S**	**6-6F3MK4SS**	315	315
3/8-19	1/2-14	22	7.9	13.5	40	68	**6-8F3MK4S**	**6-8F3MK4SS**	160	160
3/8-19	1/4-19	22	7.9	7.0	35	48	**6F3MK4S**	**6F3MK4SS**	315	315
1/2-14	1/2-14	27	11.1	11.1	44	79	**8-8F3MK4S**	**8-8F3MK4SS**	160	160
1/2-14	3/8-19	27	11.1	10.0	39	68	**8F3MK4S**	**8F3MK4SS**	200	200
5/8-14	1/2-14	30	14.3	13.5	46	101	**10F3MK4S**	**10F3MK4SS**	200	200
5/8-14	3/4-14	30	14.3	14.3	47	102	**10-12F3MK4S**	**10-12F3MK4SS**	160	160
3/4-14	1/2-14	32	16.7	13.5	46	111	**12-8F3MK4S**	**12-8F3MK4SS**	315	315
3/4-14	3/4-14	32	16.7	16.7	46	126	**12F3MK4S**	**12F3MK4SS**	160	160
3/4-14	1-14	36	16.7	24.0	51	242	**12-16F3MK4S**	**12-16F3MK4SS**	120	120
1-11	3/4-14	41	22.2	18.0	50	173	**16-12F3MK4S**	**16-12F3MK4SS**	120	120
1-11	1-11	41	22.2	22.2	55	219	**16F3MK4S**	**16F3MK4SS**	120	120
1 1/4-11	1 1/4-11	50	28.6	32.0	64	337	**20F3MK4S**	**20F3MK4SS**	105	105
1 1/2-11	1 1/2-11	55	33.3	33.3	69	497	**24F3MK4S**	**24F3MK4SS**	105	105

Order codes shown are part of our current manufacturing programme.

Imperial and metric parts may vary in hexagon dimensions.

$\frac{\text{PN (bar)}}{10} = \text{PN (MPa)}$

Do not create drawings from these dimensions, they are subject to change and ISO manufacturing allowances.

FNMK4 Cap

BSPP 60° Cone female swivel cap end

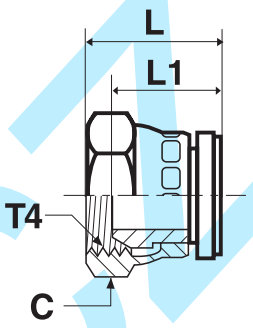

Thread BSPP T4	C mm	L mm	L1 mm	Weight (steel) g/1 piece	Adapter Steel	Adapter Stainless Steel	PN (bar) S	PN (bar) SS
1/8-28	14	16	11	19	**2FNMK4S**	**2FNMK4SS**	350	350
1/4-19	19	20	15	23	**4FNMK4S**	**4FNMK4SS**	350	350
3/8-19	22	22	15	43	**6FNMK4S**	**6FNMK4SS**	350	350
1/2-14	27	25	18	64	**8FNMK4S**	**8FNMK4SS**	200	200
5/8-14	30	25	16	80	**10FNMK4S**	**10FNMK4SS**	200	200
3/4-14	32	26	17	115	**12FNMK4S**	**12FNMK4SS**	200	200
1-11	41	30	19	154	**16FNMK4S**	**16FNMK4SS**	120	120
1 1/4-11	50	34	24	345	**20FNMK4S**	**20FNMK4SS**	105	105
1 1/2-11	60	36	23	500	**24FNMK4S**	**24FNMK4SS**	105	105

Order codes shown are part of our current manufacturing programme.

Imperial and metric parts may vary in hexagon dimensions.

$\frac{\text{PN (bar)}}{10} = \text{PN (MPa)}$

Do not create drawings from these dimensions, they are subject to change and ISO manufacturing allowances.

Kovaz.cz

FMK4 Male stud connector

BSPP 60° Cone end (ISO 8434-6) / Male NPTF* thread (SAE J476)
*Stainless Steel = NPT to prevent galling

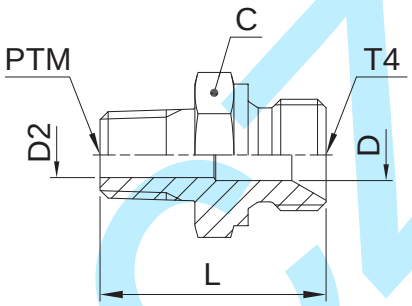

Thread BSPP T4	Thread NPT/NPTF PTM	C mm	D mm	D2 mm	L mm	Weight (steel) g/1 piece	Adapter Steel	Adapter Stainless Steel	PN (bar) S	PN (bar) SS
1/8-28	1/8-28	14	3.5	3.5	24	17	**2FMK4S**	**2FMK4SS**	350	350
1/8-28	1/4-19	14	3.5	3.5	29	21	**2-4FMK4S**	**2-4FMK4SS**	350	350
1/4-19	1/8-28	19	4.7	4.7	29	24	**4FMK4S**	**4FMK4SS**	350	350
1/4-19	1/4-19	19	4.7	4.7	33	33	**4-4FMK4S**	**4-4FMK4SS**	350	350
1/4-19	3/8-19	19	4.7	4.7	33	41	**4-6FMK4S**	**4-6FMK4SS**	350	350
1/4-19	1/2-14	22	4.7	4.7	40	80	**4-8FMK4S**	**4-8FMK4SS**	350	350
3/8-19	1/4-19	22	7.9	7.0	35	45	**6FMK4S**	**6FMK4SS**	350	350
3/8-19	3/8-19	22	7.9	7.9	35	50	**6-6FMK4S**	**6-6FMK4SS**	350	350
3/8-19	1/2-14	22	7.9	7.9	40	77	**6-8FMK4S**	**6-8FMK4SS**	350	350
1/2-14	3/8-19	27	11.1	10.0	39	48	**8FMK4S**	**8FMK4SS**	200	200
1/2-14	1/2-14	27	11.1	11.1	43	93	**8-8FMK4S**	**8-8FMK4SS**	200	200
1/2-14	3/4-14	27	11.1	11.1	43	95	**8-12FMK4S**	**8-12FMK4SS**	200	200
3/4-14	1/2-14	32	16.7	13.5	46	112	**12-8FMK4S**	**12-8FMK4SS**	200	200
3/4-14	3/4-14	32	16.7	16.7	46	124	**12FMK4S**	**12FMK4SS**	200	200
3/4-14	1-11	36	16.7	16.7	51	150	**12-16FMK4S**	**12-16FMK4SS**	200	200
1-11	3/4-14	41	22.2	18.0	50	188	**16-12FMK4S**	**16-12FMK4SS**	120	120
1-11	1-11	41	22.2	22.2	55	234	**16FMK4S**	**16FMK4SS**	120	120
1 1/4-11	1 1/4-11	50	28.6	28.6	64	360	**20FMK4S**	**20FMK4SS**	105	105
1 1/2-11	1 1/2-11	55	33.3	38.0	69	510	**24FMK4S**	**24FMK4SS**	105	105

Order codes shown are part of our current manufacturing programme.

Imperial and metric parts may vary in hexagon dimensions.

$\frac{\text{PN (bar)}}{10}$ = PN (MPa)

Do not create drawings from these dimensions, they are subject to change and ISO manufacturing allowances.

GG44M Female thread coupling

Female BSPP thread (ISO 1179-1)

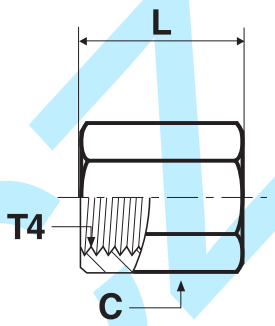

Thread BSPP T4	C mm	L mm	Weight (steel) g/1 piece	Adapter Steel	Adapter Stainless Steel	PN (bar) S	PN (bar) SS
1/8-28	14	19	16	**1/8GG44MS**	**1/8GG44MSS**	420	420
1/4-19	17	28	30	**1/4GG44MS**	**1/4GG44MSS**	420	420
3/8-19	22	28	47	**3/8GG44MS**	**3/8GG44MSS**	420	420
1/2-14	27	33	78	**1/2GG44MS**	**1/2GG44MSS**	350	350
3/4-14	32	37	105	**3/4GG44MS**	**3/4GG44MSS**	280	280
1-11	46	42	341	**1GG44MS**	**1GG44MSS**	210	210

Order codes shown are part of our current manufacturing programme.

Imperial and metric parts may vary in hexagon dimensions.

$\frac{\text{PN (bar)}}{10}$ = PN (MPa)

Do not create drawings from these dimensions, they are subject to change and ISO manufacturing allowances.

O

kovaz.cz

Index

MMO444M Female thread tee

Female BSPP threads (ISO 1179-1)

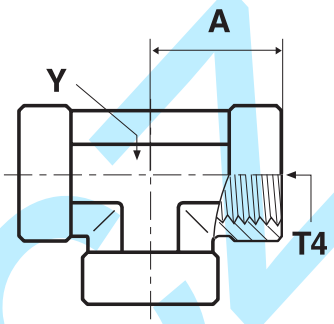

Thread BSPP T4	A mm	Y mm	Weight (steel) g/1 piece	Adapter Steel	PN (bar)
1/4-19	22	19	74	**1/4MMO444MS**	350
3/8-19	26	22	111	**3/8MMO444MS**	315
1/2-14	31	27	177	**1/2MMO444MS**	210
3/4-14	40	33	294	**3/4MMO444MS**	210
1-11	46	41	567	**1MMO444MS**	120

Order codes shown are part of our current manufacturing programme.

Imperial and metric parts may vary in hexagon dimensions.

$\frac{\text{PN (bar)}}{10}$ = PN (MPa)

Do not create drawings from these dimensions, they are subject to change and ISO manufacturing allowances.

kovaz.cz

PTR34M Thread reducer

Male BSPT thread (ISO 7) / Female BSPP thread (ISO 1179-1)

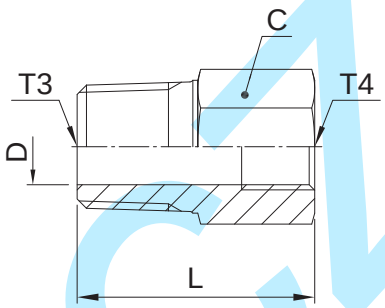

Thread BSPT T3	Thread BSPP T4	C mm	D mm	L mm	Weight (steel) g/1 piece	Adapter Steel	Adapter Stainless Steel	PN (bar) S	PN (bar) SS
1/4-19	1/8-28	14	7.0	28	16	**1/4X1/8PTR34MS**	**1/4X1/8PTR34MSS**	315	315
3/8-19	1/4-19	19	10.0	33	44	**3/8X1/4PTR34MS**	**3/8X1/4PTR34MSS**	315	315
1/2-14	1/4-19	22	11.7	39	71	**1/2X1/4PTR34MS**	**1/2X1/4PTR34MSS**	315	315
1/2-14	3/8-19	22	13.5	39	48	**1/2X3/8PTR34MS**	**1/2X3/8PTR34MSS**	315	315
3/4-14	1/4-19	27	11.7	39	108	**3/4X1/4PTR34MS**	**3/4X1/4PTR34MSS**	280	280
3/4-14	3/8-19	27	18.0	39	127	**3/4X3/8PTR34MS**	**3/4X3/8PTR34MSS**	280	280
3/4-14	1/2-14	27	18.0	42	94	**3/4X1/2PTR34MS**	**3/4X1/2PTR34MSS**	280	280
1-11	3/8-19	36	24.0	40	185	**1X3/8PTR34MS**	**1X3/8PTR34MSS**	210	210
1-11	1/2-14	36	24.0	48	224	**1X1/2PTR34MS**	**1X1/2PTR34MSS**	210	210
1-11	3/4-14	36	24.0	49	186	**1X3/4PTR34MS**	**1X3/4PTR34MSS**	210	210

Order codes shown are part of our current manufacturing programme.

Imperial and metric parts may vary in hexagon dimensions.

$\frac{\text{PN (bar)}}{10}$ = PN (MPa)

Do not create drawings from these dimensions, they are subject to change and ISO manufacturing allowances.

O

kovaz.cz

Index

FF33M Male nipple

Male BSPT thread (ISO 7)

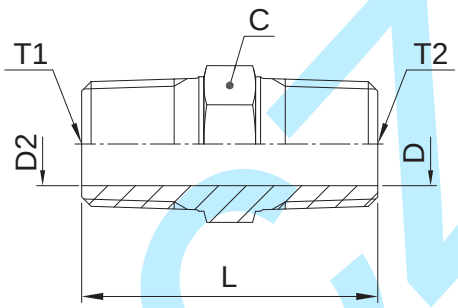

Thread BSPT T1	Thread BSPT T2	C mm	D mm	D2 mm	L mm	Weight (steel) g/1 piece	Adapter Steel	Adapter Stainless Steel	PN (bar) S	PN (bar) SS
1/8-28	1/8-28	11	5.0	5.0	27	12	**1/8FF33MS**	**1/8FF33MSS**	315	315
1/4-19	1/8-28	14	5.0	5.0	32	25	**1/4X1/8FF33MS**	**1/4X1/8FF33MSS**	315	315
1/4-19	1/4-19	14	7.0	7.0	37	25	**1/4FF33MS**	**1/4FF33MSS**	315	315
3/8-19	1/4-19	17	7.0	7.0	37	42	**3/8X1/4FF33MS**	**3/8X1/4FF33MSS**	315	315
3/8-19	3/8-19	17	10.0	10.0	37	30	**3/8FF33MS**	**3/8FF33MSS**	315	315
1/2-14	1/4-19	22	7.0	7.0	43	68	**1/2X1/4FF33MS**	**1/2X1/4FF33MSS**	315	315
1/2-14	3/8-19	22	10.3	10.3	43	67	**1/2X3/8FF33MS**	**1/2X3/8FF33MSS**	315	315
1/2-14	1/2-14	22	13.5	13.5	48	72	**1/2FF33MS**	**1/2FF33MSS**	315	315
3/4-14	1/2-14	27	13.5	13.5	50	123	**3/4X1/2FF33MS**	**3/4X1/2FF33MSS**	160	160
3/4-14	3/4-14	27	18.0	18.0	50	110	**3/4FF33MS**	**3/4FF33MSS**	160	160
1-11	3/4-14	36	18.0	18.0	55	215	**1X3/4FF33MS**	**1X3/4FF33MSS**	160	160
1-11	1-11	36	23.8	23.8	59	190	**1FF33MS**	**1FF33MSS**	160	160

Order codes shown are part of our current manufacturing programme.

Imperial and metric parts may vary in hexagon dimensions.

$$\frac{\text{PN (bar)}}{10} = \text{PN (MPa)}$$

Do not create drawings from these dimensions, they are subject to change and ISO manufacturing allowances.

Kovaco.cz

HP3M Hexagon head plug

Male BSPT thread (ISO 7)

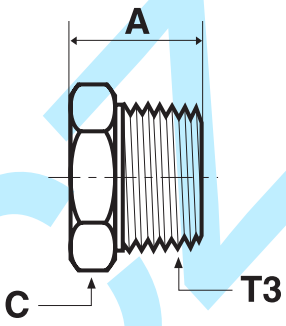

Thread BSPT T3	A mm	C mm	Weight (steel) g/1 piece	Adapter Steel	Adapter Stainless Steel	PN (bar) S	PN (bar) SS
1/8-28	14	11	9	**1/8HP3MS**	**1/8HP3MSS**	315	315
1/4-19	19	14	16	**1/4HP3MS**	**1/4HP3MSS**	315	315
3/8-19	20	19	35	**3/8HP3MS**	**3/8HP3MSS**	315	315
1/2-14	25	22	52	**1/2HP3MS**	**1/2HP3MSS**	315	315
3/4-14	27	27	85	**3/4HP3MS**	**3/4HP3MSS**	160	160
1-11	32	36	134	**1HP3MS**	**1HP3MSS**	160	160

Order codes shown are part of our current manufacturing programme.

Imperial and metric parts may vary in hexagon dimensions.

$\frac{\text{PN (bar)}}{10}$ = PN (MPa)

Do not create drawings from these dimensions, they are subject to change and ISO manufacturing allowances.

kovaz.si

0107 Swivel male stud

Male NPTF* thread (SAE J476) / NPSM Female swivel end (SAE J516)
SAE 140130
*Stainless Steel = NPT to prevent galling

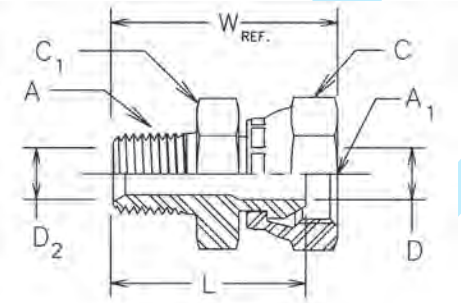

Thread NPTF A	Thread NPSM A1	C mm	C1 mm	D mm	D2 mm	L mm	W mm	Weight (steel) g/1 piece	Adapter Steel	Adapter Stainless Steel	PN (bar) S	PN (bar) SS
1/8-27	1/8-27	14.3	14.3	4.0	4.8	24	28	23	**0107-2-2**	**0107-2-2-SS**	350	350
1/8-27	1/4-18	17.5	16.0	4.8	4.8	27	32	33	**0107-2-4**	**0107-2-4-SS**	350	350
1/4-18	1/4-18	17.5	17.5	5.6	7.1	32	36	40	**0107-4-4**	**0107-4-4-SS**	350	350
1/4-18	3/8-18	22.2	20.6	7.1	7.1	32	37	57	**0107-4-6**	**0107-4-6-SS**	280	280
1/4-18	1/2-14	25.4	23.8	11.9	7.1	37	44	91	**0107-4-8**	**0107-4-8-SS**	245	245
3/8-18	1/4-18	17.5	17.5	5.6	10.3	33	38	48	**0107-6-4**	**0107-6-4-SS**	350	350
3/8-18	3/8-18	22.2	22.2	8.7	10.3	33	38	62	**0107-6-6**	**0107-6-6-SS**	280	280
3/8-18	1/2-14	25.4	23.8	10.3	10.3	37	44	97	**0107-6-8**	**0107-6-8-SS**	245	245
1/2-14	3/8-18	22.2	22.2	8.7	13.5	38	43	76	**0107-8-6**	**0107-8-6-SS**	280	280
1/2-14	1/2-14	25.4	25.4	11.9	13.5	41	49	109	**0107-8-8**	**0107-8-8-SS**	245	245
1/2-14	3/4-14	31.8	31.8	13.5	13.5	43	52	167	**0107-8-12**	**0107-8-12-SS**	140	140
3/4-14	1/2-14	25.4	28.6	11.9	18.3	41	49	122	**0107-12-8**	**0107-12-8-SS**	245	245
3/4-14	3/4-14	31.8	31.8	16.3	18.3	43	52	154	**0107-12-12**	**0107-12-12-SS**	140	140
3/4-14	1-11.5	38.0	38.0	21.4	18.3	46	55	247	**0107-12-16**	**0107-12-16-SS**	120	120
1-11.5	3/4-14	31.8	35.0	16.3	23.8	49	58	217	**0107-16-12**	**0107-16-12-SS**	140	140
1-11.5	1-11.5	38.0	38.0	21.4	23.8	51	60	238	**0107-16-16**	**0107-16-16-SS**	120	120
1-11.5	1 1/4-11.5	47.6	44.5	29.0	23.8	51	61	298	**0107-16-20**	**0107-16-20-SS**	120	120
1 1/4-11.5	1-11.5	38.0	47.6	21.4	31.8	53	63	356	**0107-20-16**	**0107-20-16-SS**	120	120
1 1/4-11.5	1 1/4-11.5	47.6	47.6	29.0	31.8	53	63	390	**0107-20-20**	**0107-20-20-SS**	120	120
1 1/2-11.5	1 1/2-11.5	54.0	54.0	34.5	38.1	56	66	498	**0107-24-24**	**0107-24-24-SS**	85	85
2-11.5	2-11.5	66.7	66.7	46.1	49.2	60	71	749	**0107-32-32**	**0107-32-32-SS**	75	75

Order codes shown are part of our current manufacturing programme.

Imperial and metric parts may vary in hexagon dimensions.

$\frac{\text{PN (bar)}}{10}$ = PN (MPa)

Do not create drawings from these dimensions, they are subject to change and ISO manufacturing allowances.

2107 Swivel male elbow

Male NPTF* thread (SAE J476) / NPSM Female swivel end (SAE J516)
SAE 140230
*Stainless Steel = NPT to prevent galling

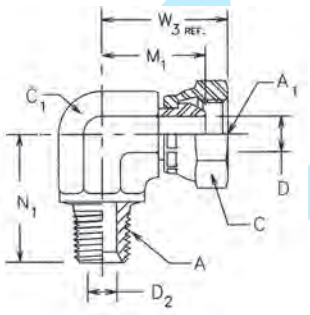

Thread NPTF A	Thread NPSM A1	C mm	C1 mm	D mm	D2 mm	M1 mm	N1 mm	W3 mm	Weight (steel) g/1 piece	Adapter Steel	Adapter Stainless Steel	PN (bar) S	PN (bar) SS
1/8-27	1/8-27	14.3	11.0	4.0	4.8	18	18	22	28	**2107-2-2**	**2107-2-2-SS**	350	350
1/4-18	1/4-18	17.5	14.0	5.6	7.1	22	28	27	55	**2107-4-4**	**2107-4-4-SS**	350	350
1/4-18	3/8-18	22.2	19.0	8.7	7.1	25	28	33	94	**2107-4-6**	**2107-4-6-SS**	280	280
3/8-18	1/4-18	17.5	19.0	5.6	10.3	25	31	30	88	**2107-6-4**	**2107-6-4-SS**	350	350
3/8-18	3/8-18	22.2	19.0	8.7	10.3	25	31	33	90	**2107-6-6**	**2107-6-6-SS**	280	280
3/8-18	1/2-14	25.4	19.0	11.9	10.3	26	31	34	107	**2107-6-8**	**2107-6-8-SS**	245	245
1/2-14	3/8-18	22.2	22.0	8.7	13.5	27	37	34	130	**2107-8-6**	**2107-8-6-SS**	280	280
1/2-14	1/2-14	25.4	22.0	11.9	13.5	28	37	36	139	**2107-8-8**	**2107-8-8-SS**	245	245
1/2-14	3/4-14	31.8	27.0	16.3	13.5	33	37	42	221	**2107-8-12**	**2107-8-12-SS**	140	140
3/4-14	3/8-18	22.2	27.0	8.7	18.3	30	40	38	227	**2107-12-6**	**2107-12-6-SS**	280	280
3/4-14	1/2-14	25.4	27.0	11.9	18.3	32	40	39	191	**2107-12-8**	**2107-12-8-SS**	245	245
3/4-14	3/4-14	31.8	27.0	16.3	18.3	33	40	42	225	**2107-12-12**	**2107-12-12-SS**	140	140
1-11.5	3/4-14	31.8	33.3	16.3	23.8	37	50	46	374	**2107-16-12**	**2107-16-12-SS**	140	140
1-11.5	1-11.5	38.0	33.3	21.4	23.8	39	50	49	361	**2107-16-16**	**2107-16-16-SS**	120	120
1 1/4-11.5	1 1/4-11.5	47.6	41.0	29.0	31.8	44	61	54	794	**2107-20-20**	**2107-20-20-SS**	120	120
1 1/2-11.5	1 1/2-11.5	54.0	47.6	34.5	38.1	48	67	59	782	**2107-24-24**	**2107-24-24-SS**	85	85
2-11.5	2-11.5	66.7	63.5	46.1	49.2	58	76	69	1910	**2107-32-32**	**2107-32-32-SS**	75	75

Order codes shown are part of our current manufacturing programme.

Imperial and metric parts may vary in hexagon dimensions.

$\frac{\text{PN (bar)}}{10} = \text{PN (MPa)}$

Do not create drawings from these dimensions, they are subject to change and ISO manufacturing allowances.

O

3107 Swivel male 45° elbow

Male NPTF* thread (SAE J476) / NPSM Female swivel end (SAE J516)
SAE 140330
*Stainless Steel = NPT to prevent galling

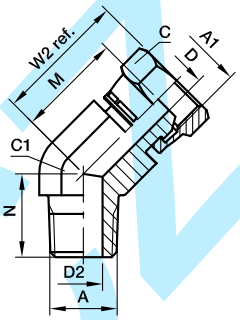

Thread NPTF A	Thread NPSM A1	C mm	C1 mm	D mm	D2 mm	M mm	N mm	W2 mm	Weight (steel) g/1 piece	Adapter Steel	Adapter Stainless Steel	PN (bar) S	PN (bar) SS
1/8-27	1/8-27	14.3	11.0	4.0	4.8	16	13	20	21	**3107-2-2**		350	—
1/4-18	1/4-18	17.5	14.0	5.6	7.1	19	22	23	44	**3107-4-4**	**3107-4-4-SS**	350	350
3/8-18	3/8-18	22.2	19.0	8.7	10.3	21	24	28	80	**3107-6-6**	**3107-6-6-SS**	280	280
1/2-14	3/8-18	22.2	22.0	8.7	13.5	21	30	28	110	**3107-8-6**	**3107-8-6-SS**	280	280
1/2-14	1/2-14	25.4	22.0	11.9	13.5	22	30	30	114	**3107-8-8**	**3107-8-8-SS**	245	245
1/2-14	3/4-14	31.8	27.0	16.3	13.5	23	38	31	144	**3107-8-12**	**3107-8-12-SS**	140	140
3/4-14	1/2-14	25.4	27.0	11.9	18.3	24	31	31	153	**3107-12-8**	**3107-12-8-SS**	245	245
3/4-14	3/4-14	31.8	27.0	16.3	18.3	26	31	35	172	**3107-12-12**	**3107-12-12-SS**	140	140
1-11.5	3/4-14	31.8	33.3	16.3	23.8	28	38	37	245	**3107-16-12**	**3107-16-12-SS**	140	140
1-11.5	1-11.5	38.0	33.3	21.4	23.8	29	38	39	368	**3107-16-16**	**3107-16-16-SS**	120	120
1 1/4-11.5	1 1/4-11.5	47.6	41.0	29.0	31.8	31	42	41	619	**3107-20-20**	**3107-20-20-SS**	120	120
1 1/2-11.5	1 1/2-11.5	54.0	47.6	34.5	38.1	34	45	45	719	**3107-24-24**	**3107-24-24-SS**	85	85
2-11.5	2-11.5	66.7	63.5	46.1	49.2	37	54	48	1372	**3107-32-32**	**3107-32-32-SS**	75	75

Order codes shown are part of our current manufacturing programme.

Imperial and metric parts may vary in hexagon dimensions.

$\frac{\text{PN (bar)}}{10}$ = PN (MPa)

Do not create drawings from these dimensions, they are subject to change and ISO manufacturing allowances.

Kovaľ.cz

0207 Female connector

Female NPTF* thread (SAE J476) / NPSM Female swivel end (SAE J516)
SAE 140131
*Stainless Steel = NPT to prevent galling

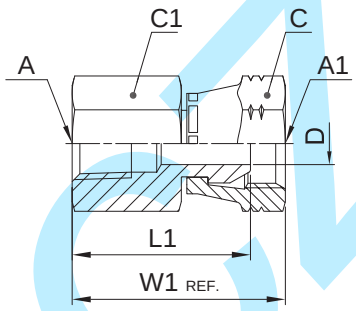

Thread NPTF A	Thread NPSM A1	C mm	C1 mm	D mm	L1 mm	W1 mm	Weight (steel) g/1 piece	Adapter Steel	Adapter Stainless Steel	PN (bar) S	PN (bar) SS
1/8-27	1/8-27	14.3	14.3	4.0	22	26	15	**0207-2-2**	**0207-2-2-SS**	350	350
1/4-18	1/4-18	17.5	17.5	5.6	32	36	44	**0207-4-4**	**0207-4-4-SS**	350	350
3/8-18	1/4-18	17.5	22.2	5.6	33	38	52	**0207-6-4**	**0207-6-4-SS**	350	350
3/8-18	3/8-18	22.2	22.2	8.7	33	38	81	**0207-6-6**	**0207-6-6-SS**	280	280
1/2-14	3/8-18	22.2	25.4	8.7	39	44	121	**0207-8-6**	**0207-8-6-SS**	280	280
1/2-14	1/2-14	25.4	25.4	11.9	38	46	119	**0207-8-8**	**0207-8-8-SS**	245	245
3/4-14	3/4-14	31.8	31.8	16.3	41	50	161	**0207-12-12**	**0207-12-12-SS**	140	140
1-11.5	1-11.5	38.0	38.0	21.4	51	60	162	**0207-16-16**	**0207-16-16-SS**	120	120
1 1/4-11.5	1 1/4-11.5	47.6	47.6	29.0	51	61	378	**0207-20-20**	**0207-20-20-SS**	120	120
1 1/2-11.5	1 1/2-11.5	54.0	54.0	34.5	51	62	446	**0207-24-24**	**0207-24-24-SS**	85	85
2-11.5	2-11.5	66.7	66.7	46.1	54	65	707	**0207-32-32**	**0207-32-32-SS**	75	75

Order codes shown are part of our current manufacturing programme.

Imperial and metric parts may vary in hexagon dimensions.

$\frac{\text{PN (bar)}}{10}$ = PN (MPa)

Do not create drawings from these dimensions, they are subject to change and ISO manufacturing allowances.

O

Kovai.co

2207 Female elbow

Female NPTF* thread (SAE J476) / NPSM Female swivel end (SAE J516)
SAE 140231
*Stainless Steel = NPT to prevent galling

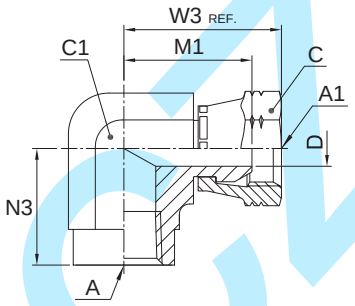

Thread NPTF A	Thread NPSM A1	C mm	C1 mm	D mm	M1 mm	W3 mm	N3 mm	Weight (steel) g/1 piece	Adapter Steel	Adapter Stainless Steel	PN (bar) S	PN (bar) SS
1/8-27	1/8-27	14.3	14.0	4.0	20	24	17	37	**2207-2-2**	**2207-2-2-SS**	350	350
1/4-18	1/4-18	17.5	19.0	5.6	25	30	22	98	**2207-4-4**	**2207-4-4-SS**	350	350
3/8-18	3/8-18	22.2	22.0	8.7	27	32	26	152	**2207-6-6**	**2207-6-6-SS**	280	280
1/2-14	1/2-14	25.4	27.0	11.9	32	39	31	246	**2207-8-8**	**2207-8-8-SS**	245	245
3/4-14	3/4-14	31.8	33.3	16.3	37	46	35	313	**2207-12-12**	**2207-12-12-SS**	140	140
1-11.5	1-11.5	38.0	41.0	21.4	44	53	41	530	**2207-16-16**	**2207-16-16-SS**	120	120
1 1/4-11.5	1 1/4-11.5	47.6	47.6	29.0	47	56	43	1159	**2207-20-20**	**2207-20-20-SS**	120	120
1 1/2-11.5	1 1/2-11.5	54.0	63.5	34.5	61	72	53	1679	**2207-24-24**	**2207-24-24-SS**	85	85
2-11.5	2-11.5	66.7	71.5	46.1	65	76	61	2136	**2207-32-32**	**2207-32-32-SS**	75	75

Order codes shown are part of our current manufacturing programme.

Imperial and metric parts may vary in hexagon dimensions.

$\frac{\text{PN (bar)}}{10}$ = PN (MPa)

Do not create drawings from these dimensions, they are subject to change and ISO manufacturing allowances.

Kovaz.cz

0507 Swivel male stud

Male UN/UNF thread O-ring (ISO 11926) / NPSM Female swivel end (SAE J516)
SAE 140157

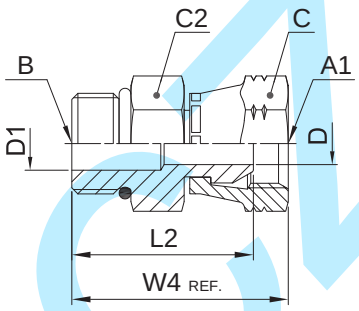

Thread UN/UNF-2A B	Thread NPSM A1	C mm	C2 mm	D mm	D1 mm	L2 mm	W4 mm	Weight (steel) g/1 piece	Adapter Steel	PN (bar)
7/16-20	1/4-18	17.5	14.3	5.6	5.6	29	34	32	**0507-4-4**	350
9/16-18	1/4-18	17.5	17.5	5.6	5.6	30	34	45	**0507-6-4**	350
9/16-18	3/8-18	22.2	17.5	8.7	8.7	30	35	48	**0507-6-6**	280
9/16-18	1/2-14	25.4	19.0	7.5	7.5	33	40	76	**0507-6-8**	245
3/4-16	1/4-18	17.5	22.2	5.6	9.9	32	36	65	**0507-8-4**	350
3/4-16	3/8-18	22.2	22.2	8.7	8.7	32	37	69	**0507-8-6**	280
3/4-16	1/2-14	25.4	22.2	9.9	9.9	32	40	83	**0507-8-8**	245
3/4-16	3/4-14	31.8	25.4	16.3	9.9	37	46	137	**0507-8-12**	140
7/8-14	1/2-14	25.4	25.4	11.9	11.9	37	44	98	**0507-10-8**	245
1 1/16-12	1/2-14	25.4	31.8	11.9	11.9	40	48	157	**0507-12-8**	245
1 1/16-12	3/4-14	31.8	31.8	16.3	16.3	41	50	200	**0507-12-12**	140
1 5/16-12	1-11.5	38.0	38.0	21.4	21.4	45	54	317	**0507-16-16**	120
1 5/8-12	1 1/4-11.5	47.6	47.6	27.4	27.4	47	56	398	**0507-20-20**	120
1 7/8-12	1 1/2-11.5	54.0	54.0	33.3	33.3	50	61	498	**0507-24-24**	85
2 1/2-12	2-11.5	66.7	70.0	45.2	45.2	52	63	749	**0507-32-32**	75

Parker Adapter are delivered with NBR elastomeric seals as standard. For more details on other seal materials see page O60.

Order codes shown are part of our current manufacturing programme.

Imperial and metric parts may vary in hexagon dimensions.

$\frac{\text{PN (bar)}}{10}$ = PN (MPa)

Do not create drawings from these dimensions, they are subject to change and ISO manufacturing allowances.

O

2507 Swivel male elbow

Male UN/UNF thread O-ring (ISO 11926) / NPSM Female swivel end (SAE J516)
SAE 140257

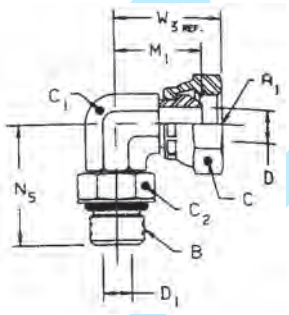

Thread UN/UNF-2A B	Thread NPSM A1	C mm	C1 mm	C2 mm	D mm	D1 mm	M1 mm	W3 mm	N5 mm	Weight (steel) g/1 piece	Adapter Steel	PN (bar)
7/16-20	1/4-18	17.5	11.0	14.3	5.6	4.4	20	25	26	42	**2507-4-4**	350
9/16-18	1/4-18	17.5	14.0	17.6	5.6	7.5	22	27	31	56	**2507-6-4**	350
9/16-18	3/8-18	22.2	14.0	17.6	8.7	7.5	22	28	31	56	**2507-6-6**	280
9/16-18	1/2-14	19.0	19.0	17.6	11.9	7.5	26	34	36	65	**2507-6-8**	245
3/4-16	3/8-18	22.2	19.0	22.2	8.7	9.9	25	30	37	119	**2507-8-6**	280
3/4-16	1/2-14	25.4	19.0	22.2	11.9	9.9	26	34	37	119	**2507-8-8**	245
3/4-16	3/4-14	31.8	27.0	22.2	16.0	9.9	33	42	41	174	**2507-8-12**	140
7/8-14	3/8-18	22.2	22.0	25.4	8.7	12.3	27	32	43	164	**2507-10-6**	280
7/8-14	1/2-14	25.4	22.0	25.4	11.9	12.3	28	36	43	178	**2507-10-8**	245
7/8-14	3/4-14	31.8	27.0	25.4	16.3	12.3	33	42	45	243	**2507-10-12**	140
1 1/16-12	1/2-14	25.4	27.0	31.8	11.9	15.5	31	38	49	193	**2507-12-8**	245
1 1/16-12	3/4-14	31.8	27.0	31.8	16.3	15.5	33	42	49	283	**2507-12-12**	140
1 5/16-12	1-11.5	38.0	33.3	38.0	21.4	21.4	39	49	53	525	**2507-16-16**	120
1 5/8-12	1 1/4-11.5	47.6	41.3	47.6	29.0	27.4	45	55	57	530	**2507-20-20**	120
1 7/8-12	1 1/2-11.5	54.0	47.6	54.0	34.5	33.3	48	59	61	600	**2507-24-24**	85

Parker Adapter are delivered with NBR elastomeric seals as standard. For more details on other seal materials see page O60.

Order codes shown are part of our current manufacturing programme.

Imperial and metric parts may vary in hexagon dimensions.

$\frac{\text{PN (bar)}}{10} = \text{PN (MPa)}$

Do not create drawings from these dimensions, they are subject to change and ISO manufacturing allowances.

3507 Swivel male 45° elbow

Male UN/UNF thread O-ring (ISO 11926) / NPSM Female swivel end (SAE J516)
SAE 140357

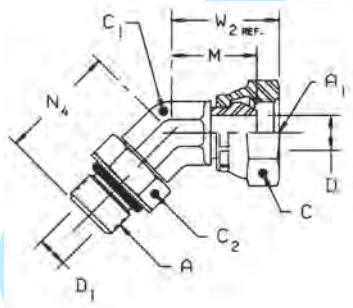

Thread UN/UNF-2A A	Thread NPSM A1	C mm	C1 mm	C2 mm	D mm	D1 mm	M mm	W2 mm	N4 mm	Weight (steel) g/1 piece	Adapter Steel	PN (bar)
7/16-20	1/4-18	17.5	11.0	14.3	5.6	4.4	16	20	27	41	**3507-4-4**	350
9/16-18	3/8-18	22.2	14.0	17.5	8.7	7.5	21	26	29	62	**3507-6-6**	280
3/4-16	3/8-18	22.2	19.0	22.2	8.7	9.9	21	26	33	106	**3507-8-6**	280
3/4-16	1/2-14	25.4	19.0	22.2	11.9	9.9	21	30	33	141	**3507-8-8**	245
3/4-16	3/4-14	31.8	27.0	22.2	16.3	9.9	26	35	36	226	**3507-8-12**	140
7/8-14	1/2-14	25.4	22.0	25.4	11.9	12.3	22	30	39	154	**3507-10-8**	245
1 1/16-12	3/4-14	31.8	27.0	31.8	16.3	15.5	26	35	44	208	**3507-12-12**	140
1 5/16-12	1-11.5	38.0	33.3	38.0	21.4	21.4	29	39	47	408	**3507-16-16**	120

Parker Adapter are delivered with NBR elastomeric seals as standard. For more details on other seal materials see page O60.

Order codes shown are part of our current manufacturing programme.

Imperial and metric parts may vary in hexagon dimensions.

$\frac{\text{PN (bar)}}{10}$ = PN (MPa)

Do not create drawings from these dimensions, they are subject to change and ISO manufacturing allowances.

O

F3T4 Male stud connector

JIS BSPP 60° cone adapters (JIS B8363) / Male BSPT thread (ISO 7)

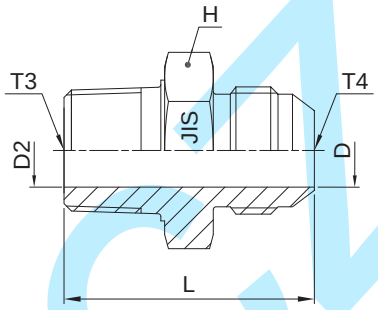

Thread BSPP T4	Thread BSPT T3	D mm	D2 mm	H mm	L mm	Weight (steel) g/1 piece	Adapter Steel	Adapter Stainless Steel	PN (bar) S	PN (bar) SS
1/4-19	1/4-19	4.5	4.5	19.0	37	41	**4F3T4S**	**4F3MT4SS**	315	315
1/4-19	3/8-19	4.5	4.5	22.2	38	61	**4-6F3T4S**	**4-6F3MT4SS**	315	315
3/8-19	1/4-19	7.0	7.0	22.2	40	57	**6-4F3T4S**	**6-4F3MT4SS**	315	315
3/8-19	3/8-19	7.0	7.0	22.2	40	66	**6F3T4S**	**6F3MT4SS**	315	315
1/2-14	3/8-19	10.3	10.3	27.0	43	88	**8-6F3T4S**	**8-6F3MT4SS**	315	315
1/2-14	1/2-14	11.0	11.0	27.0	48	105	**8F3T4S**	**8F3MT4SS**	315	200
3/4-14	3/4-14	15.9	15.9	36.5	53	334	**12F3T4S**	**12F3MT4SS**	160	160
1-11	1-11	21.0	21.0	41.3	58	268	**16F3T4S**	**16F3MT4SS**	120	120

Order codes shown are part of our current manufacturing programme.

Imperial and metric parts may vary in hexagon dimensions.

$\frac{\text{PN (bar)}}{10}$ = PN (MPa)

Do not create drawings from these dimensions, they are subject to change and ISO manufacturing allowances.

kovaz.cz

C3T4 Male elbow

JIS BSPP 60° cone adapters (JIS B8363) / Male BSPT thread (ISO 7)

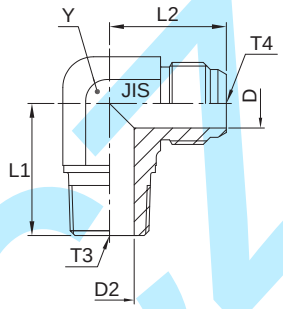

Thread BSPP T4	Thread BSPT T3	D mm	D2 mm	L1 mm	L2 mm	Y mm	Weight (steel) g/1 piece	Adapter Steel	PN (bar)
1/4-19	1/4-19	4.5	4.5	25	25	14.0	41	**4C3T4S**	315
3/8-19	3/8-19	7.0	7.0	30	29	19.0	74	**6C3T4S**	315
1/2-14	1/2-14	11.0	11.0	36	34	22.0	131	**8C3T4S**	200
3/4-14	3/4-14	15.9	15.9	43	38	27.0	146	**12C3T4S**	160
1-11	1-11	21.0	21.0	50	44	33.3	398	**16C3T4S**	120

Do not create drawings from these dimensions, they are subject to change and ISO manufacturing allowances.

V3T4 Male 45° elbow

JIS BSPP 30° Flare end (JIS B8363) / Male BSPT thread (ISO 7)

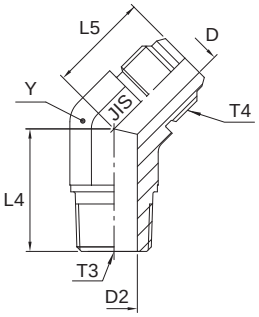

Thread BSPP T4	Thread BSPT T3	D mm	D2 mm	L4 mm	L5 mm	Y mm	Weight (steel) g/1 piece	Adapter Steel	PN (bar)
1/4-19	1/4-19	4.5	4.5	19	22	14.0	33	**4V3T4S**	315
3/8-19	3/8-19	7.0	7.0	22	25	19.0	64	**6V3T4S**	315
1/2-14	1/2-14	11.0	11.0	27	28	22.0	112	**8V3T4S**	200
3/4-14	3/4-14	15.9	15.9	30	32	27.0	162	**12V3T4S**	160
1-11	1-11	21.0	21.0	35	32	33.3	256	**16V3T4S**	120

Order codes shown are part of our current manufacturing programme.

Imperial and metric parts may vary in hexagon dimensions.

$\frac{\text{PN (bar)}}{10}$ = PN (MPa)

Do not create drawings from these dimensions, they are subject to change and ISO manufacturing allowances.

Index

HP4 Union

JIS BSPP 60° cone end (JIS B8363)

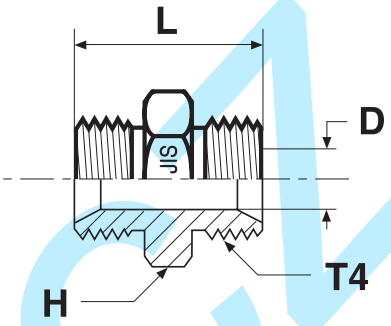

Thread BSPP T4	D mm	H mm	L mm	Weight (steel) g/1 piece	Adapter Steel	Adapter Stainless Steel	PN (bar) S	PN (bar) SS
1/4-19	4.5	19.0	34	40	**4HP4S**	**4HMP4SS**	350	350
3/8-19	7.0	22.2	38	91	**6HP4S**	**6HMP4SS**	350	350
1/2-14	11.0	27.0	46	159	**8HP4S**	**8HMP4SS**	200	200
3/4-14	15.9	36.5	52	186	**12HP4S**	**12HMP4SS**	200	200
1-11	21.0	41.3	58	290	**16HP4S**	**16HMP4SS**	120	120

Do not create drawings from these dimensions, they are subject to change and ISO manufacturing allowances.

HP46 Swivel female union

JIS BSPP 60° Cone swivel female end (JIS B8363)

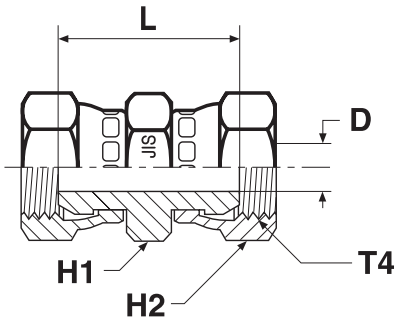

Thread BSPP T4	D mm	H1 mm	H2 mm	L mm	Weight (steel) g/1 piece	Adapter Steel	PN (bar)
1/4-19	4.5	19.0	19.0	31	33	**4HP46S**	350
3/8-19	7.0	22.2	22.2	35	49	**6HP46S**	350
1/2-14	11.0	27.0	27.0	38	77	**8HP46S**	200
3/4-14	15.9	36.5	36.5	40	114	**12HP46S**	200
1-11	21.0	41.3	41.3	46	180	**16HP46S**	120

Order codes shown are part of our current manufacturing programme.

Imperial and metric parts may vary in hexagon dimensions.

$\frac{\text{PN (bar)}}{10}$ = PN (MPa)

Do not create drawings from these dimensions, they are subject to change and ISO manufacturing allowances.

F3P4 Male stud connector

JIS BSPP 60° Cone end (JIS B8363) / Male BSPT thread (ISO 7)

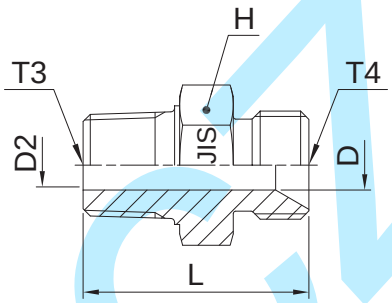

Thread BSPP T4	Thread BSPT T3	D mm	D2 mm	H mm	L mm	Weight (steel) g/1 piece	Adapter Steel	Adapter Stainless Steel	PN (bar) S	PN (bar) SS
1/4-19	1/4-19	4.5	4.5	19.0	37	47	**4F3P4S**	**4F3MP4SS**	315	315
3/8-19	3/8-19	7.0	7.0	22.2	38	67	**6F3P4S**	**6F3MP4SS**	315	315
1/2-14	1/2-14	11.0	11.0	27.0	46	109	**8F3P4S**	**8F3MP4SS**	200	200
3/4-14	3/4-14	15.9	15.9	36.5	52	195	**12F3P4S**	**12F3MP4SS**	160	160
1-11	1-11	21.0	21.0	41.3	58	292	**16F3P4S**	**16F3MP4SS**	120	120

Do not create drawings from these dimensions, they are subject to change and ISO manufacturing allowances.

C3P4 Male 90° elbow

JIS BSPP 60° cone end (JIS B8363) / Male BSPT thread (ISO 7)

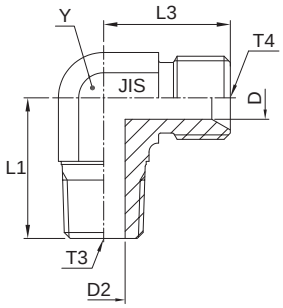

Thread BSPP T4	Thread BSPT T3	D mm	D2 mm	L1 mm	L3 mm	Y mm	Weight (steel) g/1 piece	Adapter Steel	PN (bar)
1/4-19	1/4-19	4.5	4.5	25	24	14.0	49	**4C3P4S**	315
3/8-19	3/8-19	7.0	7.0	30	29	19.0	97	**6C3P4S**	315
1/2-14	1/2-14	11.0	11.0	36	33	22.0	147	**8C3P4S**	200
3/4-14	3/4-14	15.9	15.9	43	40	27.0	206	**12C3P4S**	160
1-11	1-11	21.0	21.0	50	44	33.3	434	**16C3P4S**	120

Order codes shown are part of our current manufacturing programme.

Imperial and metric parts may vary in hexagon dimensions.

$\frac{\text{PN (bar)}}{10}$ = PN (MPa)

Do not create drawings from these dimensions, they are subject to change and ISO manufacturing allowances.

O

Index

V3P4 Male 45° elbow

JIS BSPP 60° Cone end (JIS B8363) / Male BSPT thread (ISO 7)

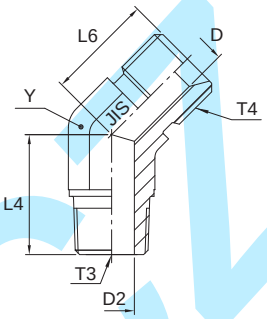

Thread BSPP T4	Thread BSPT T3	D mm	D2 mm	L4 mm	L6 mm	Y mm	Weight (steel) g/1 piece	Adapter Steel	PN (bar)
1/4-19	1/4-19	4.5	4.5	19	21	14.0	36	**4V3P4S**	350
3/8-19	3/8-19	7.0	7.0	22	23	19.0	65	**6V3P4S**	350
1/2-14	1/2-14	11.0	11.0	27	27	22.0	122	**8V3P4S**	200
3/4-14	3/4-14	15.9	15.9	30	30	27.0	159	**12V3P4S**	200
1-11	1-11	21.0	21.0	35	33	33.3	412	**16V3P4S**	120

Do not create drawings from these dimensions, they are subject to change and ISO manufacturing allowances.

F63P4 Swivel male stud

JIS BSPP 60° Cone swivel female end (JIS B8363) / Male BSPT thread (ISO 7)

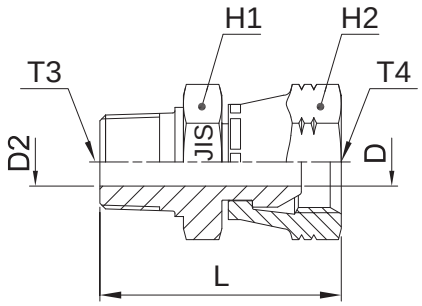

Thread BSPT T3	Thread BSPP T4	D mm	D2 mm	H1 mm	H2 mm	L mm	Weight (steel) g/1 piece	Adapter Steel	Adapter Stainless Steel	PN (bar) S	PN (bar) SS
1/4-19	1/4-19	4.5	4.5	19.0	19.0	33	41	**4F63P4S**	**4F63MP4SS**	315	315
3/8-19	3/8-19	7.0	7.0	22.2	22.2	37	70	**6F63P4S**	**6F63MP4SS**	315	315
1/2-14	1/2-14	11.0	11.0	27.0	27.0	42	122	**8F63P4S**	**8F63MP4SS**	200	200
3/4-14	3/4-14	15.9	15.9	36.5	36.5	47	254	**12F63P4S**	**12F63MP4SS**	160	160
1-11	1-11	21.0	21.0	41.3	41.3	52	367	**16F63P4S**	**16F63MP4SS**	120	120

Order codes shown are part of our current manufacturing programme.

Imperial and metric parts may vary in hexagon dimensions.

$\frac{\text{PN (bar)}}{10}$ = PN (MPa)

Do not create drawings from these dimensions, they are subject to change and ISO manufacturing allowances.

G63P4 Female swivel connector

JIS BSPP 30° Flare swivel female end (JIS B8363) / Female BSPT thread (ISO 7)

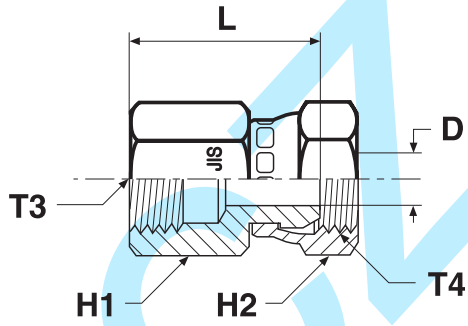

Thread BSPT T3	Thread BSPP T4	D mm	H1 mm	H2 mm	L mm	Weight (steel) g/1 piece	Adapter Steel	PN (bar)
1/4-19	1/4-19	4.5	19.0	19.0	30	36	**4G63P4S**	315
3/8-19	3/8-19	7.0	22.2	22.2	33	49	**6G63P4S**	315
1/2-14	1/2-14	11.0	27.0	27.0	36	73	**8G63P4S**	200
3/4-14	3/4-14	15.9	36.5	36.5	38	163	**12G63P4S**	160
1-11	1-11	21.0	41.3	41.3	46	195	**16G63P4S**	120

Do not create drawings from these dimensions, they are subject to change and ISO manufacturing allowances.

G3P4 Female stud connector

JIS BSPP 30° Flare end (JIS B8363) / Female BSPT thread (ISO 7)

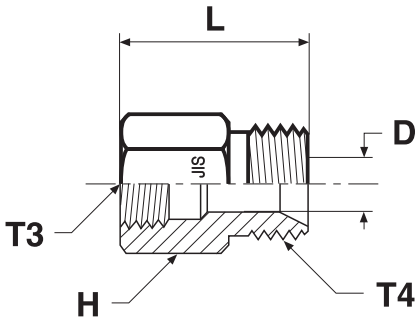

Thread BSPT T3	Thread BSPP T4	D mm	H mm	L mm	Weight (steel) g/1 piece	Adapter Steel	PN (bar)
1/4-19	1/4-19	4.5	19.0	31	40	**4G3P4S**	315
3/8-19	3/8-19	7.0	22.2	34	55	**6G3P4S**	315
1/2-14	1/2-14	11.0	27.0	40	141	**8G3P4S**	200
3/4-14	3/4-14	15.9	36.5	44	159	**12G3P4S**	160
1-11	1-11	21.0	41.3	49	225	**16G3P4S**	120

Order codes shown are part of our current manufacturing programme.

Imperial and metric parts may vary in hexagon dimensions.

$\frac{\text{PN (bar)}}{10}$ = PN (MPa)

Do not create drawings from these dimensions, they are subject to change and ISO manufacturing allowances.

O

Spare parts guide – Triple-Lok® retaining rings and seals

BSPP male threads – ISO 1179

BSPP Thread	ED seal Order code NBR	ED seal Order code FKM	O-ring order code* NBR	O-ring order code* FKM	O-ring ID × section mm	Retainer ring Order code Steel	Retainer ring Order code Stainless Steel
1/8	**ED10X1X**	**ED10X1VITX**	**6-002-N552-9**	**6-002-V894-9**	8.00 × 2.00	**8207-1/8**	**8207SS1/8**
1/4	**ED14X1.5X**	**ED14X1.5VITX**	**2-111-N552-9**	**2-111-V894-9**	10.77 × 2.62	**8207-1/4**	**8207SS1/4A**
3/8	**ED3/8X**	**ED3/8VITX**	**2-113-N552-9**	**2-113-V894-9**	13.94 × 2.62	**8207-3/8**	**8207SS3/8A**
1/2	**ED1/2X**	**ED1/2VITX**	**5-256-N552-9**	**5-256-V894-9**	17.96 × 2.62	**8207-1/2**	**8207SS1/2**
3/4	**ED26X1.5X**	**ED26X1.5VITX**	**2-119-N552-9**	**2-119-V894-9**	23.47 × 2.62	**8207-3/4**	**8207SS3/4**
1	**ED33X2X**	**ED33X2VITX**	**2-217-N552-9**	**2-217-V894-9**	29.74 × 3.53	**8207-1**	**8207SS1A**
1 1/4	**ED42X2X**	**ED42X2VITX**	**2-222-N552-9**	**2-222-V894-9**	37.69 × 3.53	**8207-1-1/4**	**8207SS1 1/4**
1 1/2	**ED48X2X**	**ED48X2VITX**	**2-224-N552-9**	**2-224-V894-9**	44.04 × 3.53	**8207-1-1/2**	**8207SS1 1/2**

Typical fittings using these parts: PTR44M / RI-ED / F4OHG5 etc.

* Must be used with correct retainer ring

Metric male threads – ISO 9974

Metric Thread	ED seal order code NBR	ED seal order code FKM	O-ring Order code* NBR	O-ring Order code* FKM	O-ring ID × section mm	Retainer ring Order code Steel	Retainer ring Order code Stainless Steel
M 10×1.0	**ED10X1X**	**ED10X1VITX**	**6-074-N552-9**	**6-074-V894-9**	8.00 × 1.50	**M10RR**	**RRM10X1SS**
M 12×1.5	**ED12X1.5X**	**ED12x1.5VITX**	**2-012-N552-9**	**2-012-V894-9**	9.25 × 1.78	**M12RR**	**RRM12X1.5SS**
M 14×1.5	**ED14X1.5X**	**ED14X1.5VITX**	**2-013-N552-9**	**2-013-V894-9**	10.82 × 1.78	**M14RR**	**RRM14X1.5SS**
M 16×1.5	**ED16X1.5X**	**ED16X1.5VITX**	**3-907-N552-9**	**3-907-V894-9**	13.46 × 2.08	**M16RR**	**RRM16X1.5SS**
M 18×1.5	**ED18X1.5X**	**ED18X1.5VITX**	**2-114-N552-9**	**2-114-V894-9**	15.54 × 2.62	**M18RR**	**RRM18X1.5SS**
M 22×2.0	**ED22X1.5X**	**ED22X1.5VITX**	**2-018-N552-9**	**2-018-V894-9**	18.77 × 1.78	**M22RR**	**RRM22X1.5SS**
M 27×2.0	**ED26X1.5X****	**ED26X1.5VITX**	**2-119-N552-9**	**2-119-V894-9**	23.47 × 2.62	**M27RR**	**RRM27X2SS**
M 33×2.0	**ED33X2X**	**ED33X2VITX**	**2-122-N552-9**	**2-122-V894-9**	28.24 × 2.62	**M33RR**	**RRM33X2SS**
M 42×2.0	**ED42X2X**	**ED42X2VITX**	**2-128-N552-9**	**2-128-V894-9**	37.77 × 2.62	**M42RR**	**RRM42X2SS**
M 48×2.0	**ED48X2X**	**ED48X2VITX**	**2-132-N552-9**	**2-132-V894-9**	44.12 × 2.62	**M48RR**	**RRM48X2SS**

Typical fittings using these parts: F8OHG5 / VSTI MED etc.

* Must be used with correct retainer ring ** Same seal used for M 26×1.5 and M 27×2.0 Threads

UN / UNF male threads – ISO 11926

UN / UNF Thread	Dash size	O-ring Order code NBR	O-ring Order code FKM	O-Ring ID × section (mm)
5/16-24	2	**3-902-N552-9**	**3-902-V894-9**	6.07 × 1.63
3/8-24	3	**3-903-N552-9**	**3-903-V894-9**	7.65 × 1.63
7/16-20	4	**3-904-N552-9**	**3-904-V894-9**	8.92 × 1.83
1/2-20	5	**3-905-N552-9**	**3-905-V894-9**	10.52 × 1.83
9/16-18	6	**3-906-N552-9**	**3-906-V894-9**	11.89 × 1.98
3/4-16	8	**3-908-N552-9**	**3-908-V894-9**	16.36 × 2.21
7/8-14	10	**3-910-N552-9**	**3-910-V894-9**	19.18 × 2.46
1 1/16-12	12	**3-912-N552-9**	**3-912-V894-9**	23.47 × 2.95
1 3/16-12	14	**3-914-N552-9**	**3-914-V894-9**	26.59 × 2.95
1 5/16-12	16	**3-916-N552-9**	**3-916-V894-9**	29.74 × 2.95
1 5/8-12	20	**3-920-N552-9**	**3-920-V894-9**	37.47 × 3.00
1 7/8-12	24	**3-924-N552-9**	**3-924-V894-9**	43.69 × 3.00
2 1/2-12	32	**3-932-N552-9**	**3-932-V894-9**	59.36 × 3.00

Typical fittings using these parts: F5OG / P5ON / F5OHAO etc.

Metric male threads – ISO 6149

Metric Thread	O-ring Order code NBR	O-ring Order code FKM	O-Ring ID × section (mm)
M 10×1.0	**6-345-N552-9**	**6-345-V894-9**	8.20 × 1.50
M 12×1.5	**6-346-N552-9**	**6-346-V894-9**	9.40 × 2.10
M 14×1.5	**6-347-N552-9**	**6-347-V894-9**	11.40 × 2.10
M 16×1.5	**6-348-N552-9**	**6-348-V894-9**	13.40 × 2.10
M 18×1.5	**6-349-N552-9**	**6-349-V894-9**	15.40 × 2.10
M 22×1.5	**6-350-N552-9**	**6-350-V894-9**	19.40 × 2.10
M 27×2.0	**6-351-N552-9**	**6-351-V894-9**	23.70 × 2.80
M 33×2.0	**6-352-N552-9**	**6-352-V894-9**	29.70 × 2.80
M 42×2.0	**6-353-N552-9**	**6-353-V894-9**	38.70 × 2.80
M 48×2.0	**6-354-N552-9**	**6-354-V894-9**	46.70 × 2.80

Typical fittings using these parts: VSTI-OR etc.

BSPP Bonded Seal

BSPP Thread Size	O.D. (mm)	I.D. (mm)	W (mm)	Material S*	Material SS	Material B	Order code
1/8-28	15.9	10.4	2.0	•			**D9DT-2**
1/4-19	20.6	13.7	2.0	•			**D9DT-4**
3/8-19	23.8	17.3	2.0	•			**D9DT-6**
1/2-14	28.6	21.5	2.3	•			**D9DT-8**
5/8-14	31.8	23.5	2.3	•			**D9DT-10**
3/4-14	34.9	27.1	2.3	•			**D9DT-12**
1-11	42.8	33.9	2.3	•			**D9DT-16**
1 1/4-11	52.4	42.9	3.3	•			**D9DT-20**
1 1/2-11	58.6	48.4	3.3	•			**D9DT-24**

Used on K4 Style Straight Fittings as a Port Seal. For use with ISO 1179 / DIN 3852-2 port.

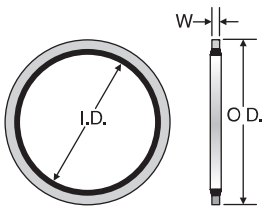

* NBR is the standard elastomer compound - 90-durometer Nitrile Zinc plated steel ring

Other seal compounds available on request for alternative applications

Ermeto Original
Valves

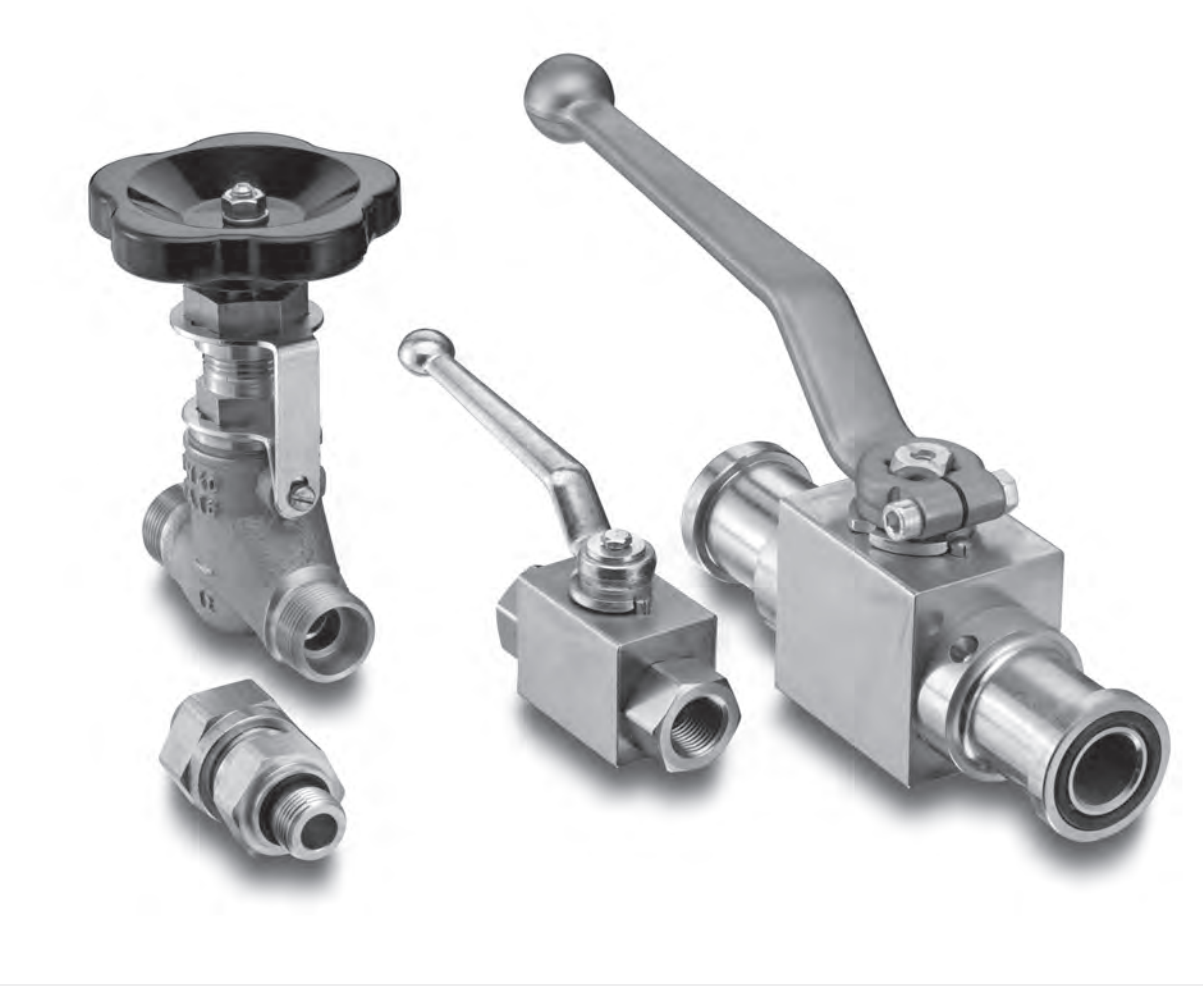

Visual index Non return valves

RHD / p. P13

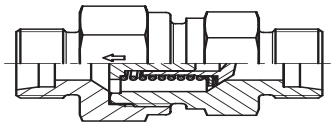

EO 24° cone end / EO 24° cone end

RHV-R-ED / p. P14

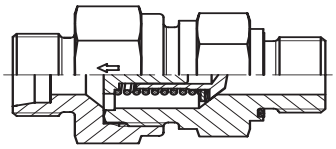

EO 24° cone end /
Male BSPP thread – ED-seal (ISO 1179)

RHZ-R-ED / p. P15

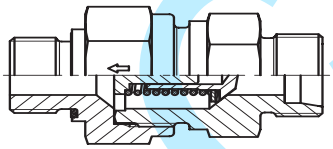

Male BSPP thread – ED-seal (ISO 1179) /
EO 24° cone end

RHV-M-ED / p. P16

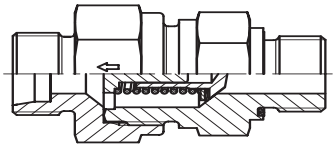

EO 24° cone end /
Male metric thread – ED-seal (ISO 9974)

RHZ-M-ED / p. P17

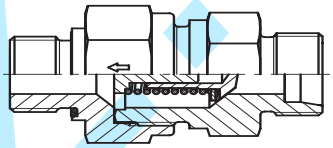

Male metric thread – ED-seal (ISO 9974) /
EO 24° cone end

RHDI / p. P18

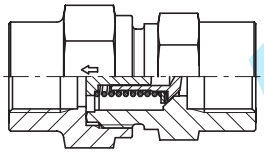

Female BSPP thread (ISO 1179-1) /
Female BSPP thread (ISO 1179-1)

RVP / p. P19

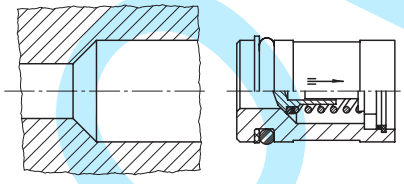

Non return valve cartridge

I-TL / p. P20

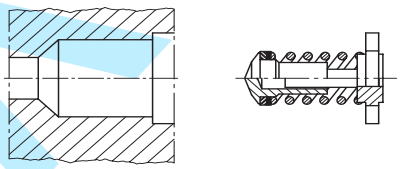

Internal parts of non return valve

Visual index Non return valves with O-Lok® connections

RHDMLOS / p. P22

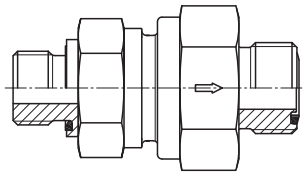

O-Lok® ORFS end / O-Lok® ORFS end

RHV42EDMLOS / p. P23

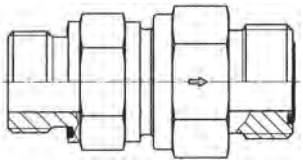

Male BSPP thread – ED-seal (ISO 1179) /
O-Lok® ORFS end

RHZ42EDMLOS / p. P24

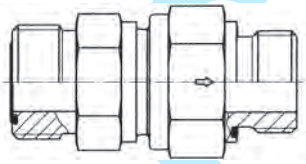

O-Lok® ORFS end /
Male BSPP thread – ED-seal (ISO 1179)

RHV5OMLOS / p. P25

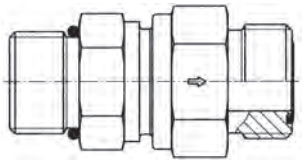

Male UN/UNF thread– O-ring (ISO 11926) /
O-Lok® ORFS end

RHZ5OMLOS / p. P26

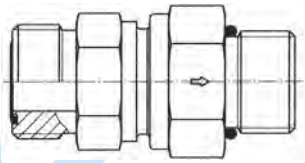

O-Lok® ORFS end /
Male UN/UNF thread– O-ring (ISO 11926)

RHV82EDMLOS / p. P27

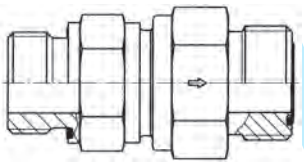

Male metric thread – ED-seal (ISO 9974) /
O-Lok® ORFS end

RHZ82EDMLOS / p. P28

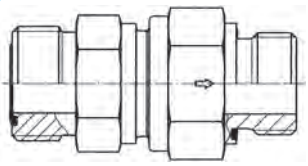

O-Lok® ORFS end /
Male metric thread – ED-seal (ISO 9974)

P

kovaz.cz

Visual index Non return valves with Triple-Lok® connections

RHDMTXS / p. P29

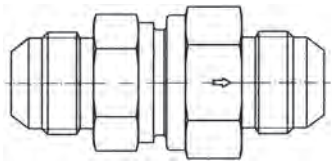

Triple-Lok® 37° flare end /
Triple-Lok® 37° flare end

RHV42EDMXS / p. P30

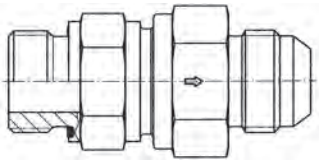

Male BSPP thread – ED-seal (ISO 1179) /
Triple-Lok® 37° flare end

RHZ42EDMXS / p. P31

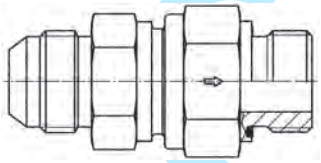

Triple-Lok® 37° flare end /
Male BSPP thread – ED-seal (ISO 1179)

RHV5OMXS / p. P32

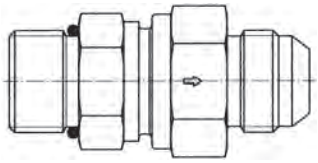

Male UN/UNF thread – O-ring (ISO 11926) /
Triple-Lok® 37° flare end

RHZ5OMXS / p. P33

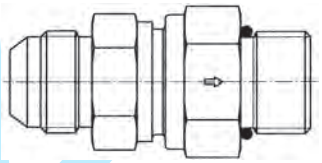

Triple-Lok® 37° flare end /
Male UN/UNF thread – O-ring (ISO 11926)

RHV82EDMXS / p. P34

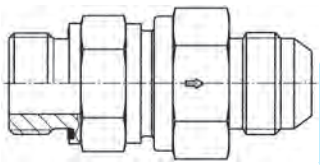

Male metric thread – ED-seal (ISO 9974) /
Triple-Lok® 37° flare end

RHZ82EDMXS / p. P35

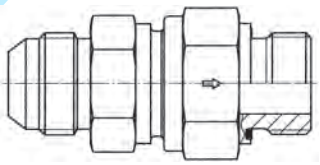

Triple-Lok® 37° flare end /
Male metric thread – ED-seal (ISO 9974)

kovaz.cz

Visual index 2-way ball valves

KH (Steel CF)
p. P40

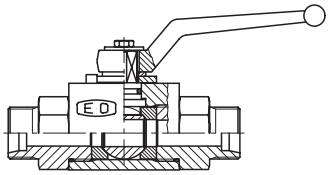

EO 24° cone end

KH (Stainless steel 71)
p. P41

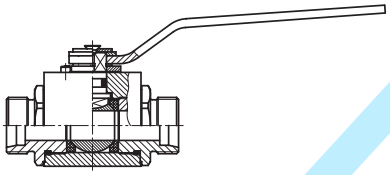

EO 24° cone end

KH-BSPP (Steel CF)
p. P42

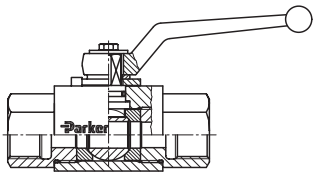

Female BSPP thread (ISO 1179-1)

KH-BSPP (Stainless steel 71)
p. P43

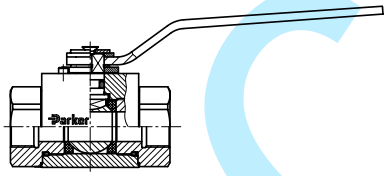

Female BSPP thread (ISO 1179-1)

KH-NPT (Steel CF)
p. P44

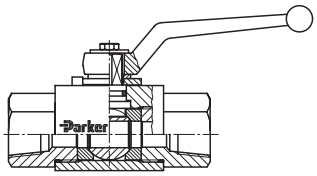

Female NPT thread (SAE 476)

KH-NPT (Stainless steel 71)
p. P45

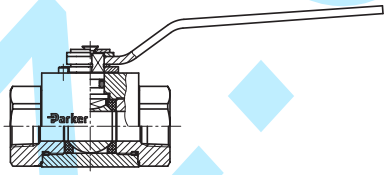

Female NPT thread (SAE 476)

Visual index 3-way ball valves

KH 3-way (Steel CF)
p. P46

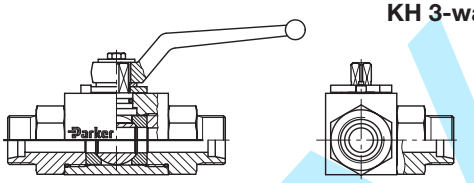

EO 24° cone end

KH 3-way (Stainless steel 71)
p. P47

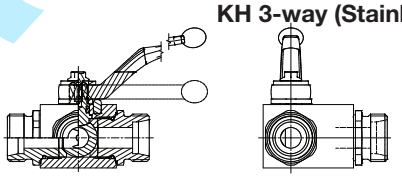

EO 24° cone end

KH 3-way BSPP (Steel CF)
p. P48

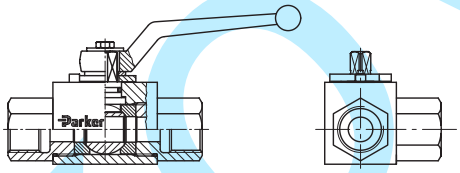

Female BSPP thread (ISO 1179-1)

KH 3-way BSPP (Stainless steel 71)
p. P49

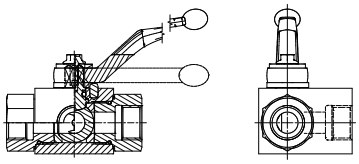

Female BSPP thread (ISO 1179-1)

KH 3-way NPT (Steel CF)
p. P50

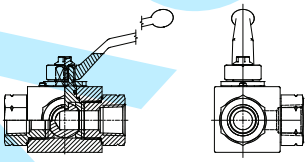

Female NPT thread (SAE 476)

KHLOCKING
p. P51

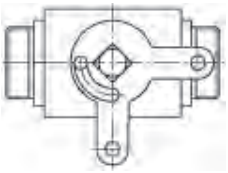

Locking Devices for Two-Way and Multiway ball valves

kovaz.cz

Visual index SAE ball valves

KH-B1V (Steel CF)
p. P52

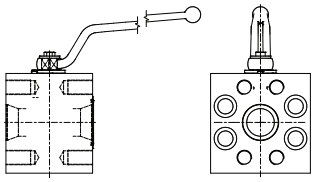

Ball valve with SAE Flange connection

KH-A (Steel CF)
p. P53

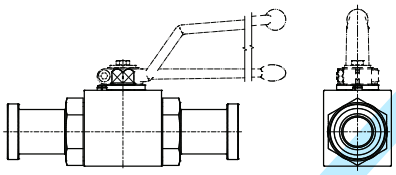

Ball valve with SAE Flange connection

KH-T (Steel CF)
p. P54

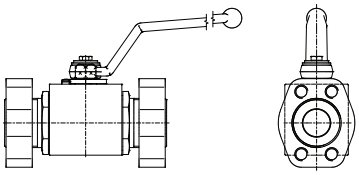

Ball valve with SAE Flange connection ISO 6162 (1/2)

More flange ball valves see catalogue 4162

Visual index ball valves for block structure

KHBLOCK
p. P55

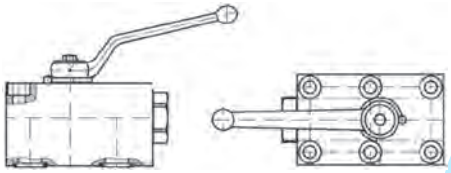

2-way ball valve for block structure

KHBLOCK -3-way
p. P56

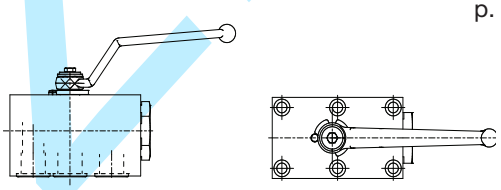

3-way ball valve for block structure

Visual index Flow Control Valves

RDV
p. P58

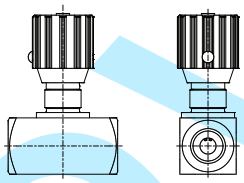

Flow Control Valve
(Female BSPP thread ISO 1179-1)

RDVR
p. P59

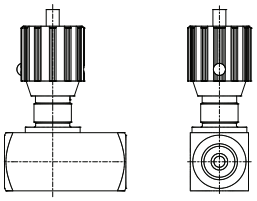

Flow Control Check Valve
(Female BSPP thread ISO 1179-1)

kovaz.cz

Visual index shut off valves

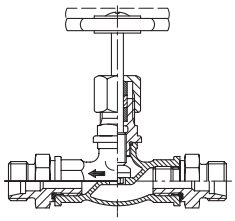

DV
p. P60

EO 24° cone end

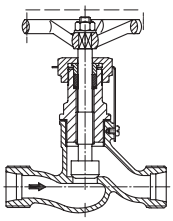

LD
p. P61

EO 24° cone end

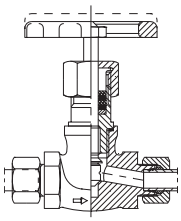

VDHA
p. P62

EO tube end

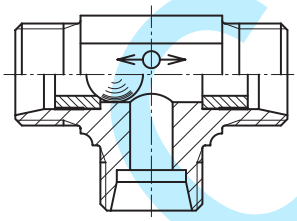

WV
p. P63

EO 24° cone end

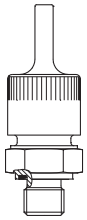

ELA/ELAE
p. P64/P65

Air-bleed valves

kovaz.cz

P

Range of non return valves, alternating valves and hand-operated shut off valves

Non-return valves with nominal pressure ratings up to PN 420 bar:

- with tube connection both ends: RHD
- with tube connection to male stud: RHV/RHZ
- with female thread both ends: RHDI
- valve cartridges: RVP
- valve internal parts: I-TL
- leakage rate hydraulic testing under test pressure: 1 drop per minute

Alternating valves:

- for nominal pressure ratings up to PN 160 WV
- leakage rate hydraulic testing under test pressure: 20 drops per minute

Shut-off valves:

- for high pressure ratings up to PN 630 bar VDHA

Design:

1. For materials, permissible working pressures, temperatures, flow medium torques for male studs etc. see relevant pages of the catalogue.
2. Tube connection ends must be assembled according to the Parker EO/EO-2 assembly instructions.
3. The valve bodies must be held rigidly during assembly of the tube connection ends.
4. Test pressures for non return valves: PN in conformance with O.D. information see chapter C.
5. Pressure drop values please see p. C12 and diagrams.

Caution!

Please note the admissible pressure ratings for the EO-tube ends.

Notes:

To assess the suitability of valves for specific applications, please advise us of the exact specification of the medium to be used, max. working pressure incl. pressure peaks, temperature and frequency of valve operations. If water is used, indicate type of water or additives, if any.

kovaz.cz

RHD/V/Z non return valve

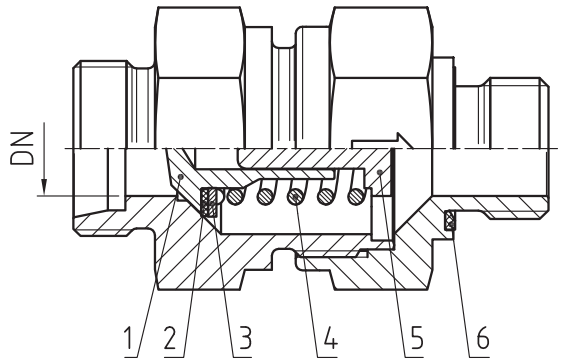

Design with sealing edge:
Size 06L and 08L / 06S and 08S
and all sizes in stainless steel with a PTFDE sealing disc.

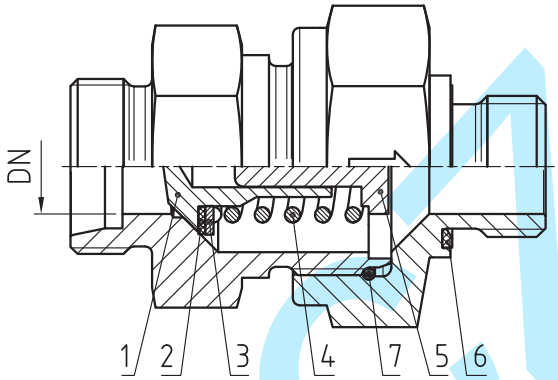

Design with O-ring (item. 7):
Sizes 10L, 12L, 15L, 18L, 22L, 28L, 35L and 42L
as well as 10S, 12S, 14S, 16S, 20S, 25S, 30S and 38S with a sealing disc out of NBR (steel) or FKM (stainless steel).

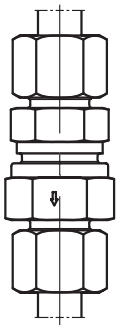
RHD

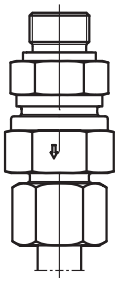
RHV

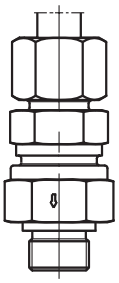
RHZ

1: poppet
2: sealing disc
3: cover disc
4: spring
5: passage disc
6: Eolastic-sealing
7: O-ring

DN = Nominal diameter (mm)

Characteristics:

Poppet check valve with a 90° valve seat with an elastomere sealing disc. Poppet stop for controlled valve opening. Damped opening action to minimize shock and noise. No reduction of cross section. Maximum flow velocity not more than 8 m/sec. Sealing of male stud thread by Eolastic soft seal with types RHV and RHZ.

Opening pressure:

Standard 1 bar (on request also 0.2, 0.5, 2, 3, 4, 5 and 6 bar are available; please specify on order). For working pressure see appropriate tables. Cracking pressure tolerance: ± 20 %.

Material:

- Steel zinc-plated (CF Cr[VI]-free), seals in NBR (e.g. Perbunan), or (FKM) on request.

Perbunan = registered trademark of Bayer

- Stainless steel valves have FKM as standard.
(Up to 3 bar cracking pressure)
- Brass-valves (CuZn35Ni2 2.0540) with internals (1.4571) available on request.
(Up to 3 bar cracking pressure)

Assembly:

See assembly instructions for EO/EO 2 connections.
Non-return valves are all packaged against contamination.

Media:

Hydraulic oil, low flammability hydraulic fluids (excent for types HFC: for HFD types; FKM seals are necessary). Air pressure tested (please indicate on order). Not suitable for steam, combustible/explosive gases, or oxygen.
For water applications, please consult Parker with details of water and any additives.

P

In all diagrams is the peak value of the flow rate in l/min. relating to the maximum permissible flow velocity of 8 m/sec.

pressure drop tube O.D. 06L/06+08S; size 4;
female BSPP 1/8, 1/4; RVP 13; DN 3.5

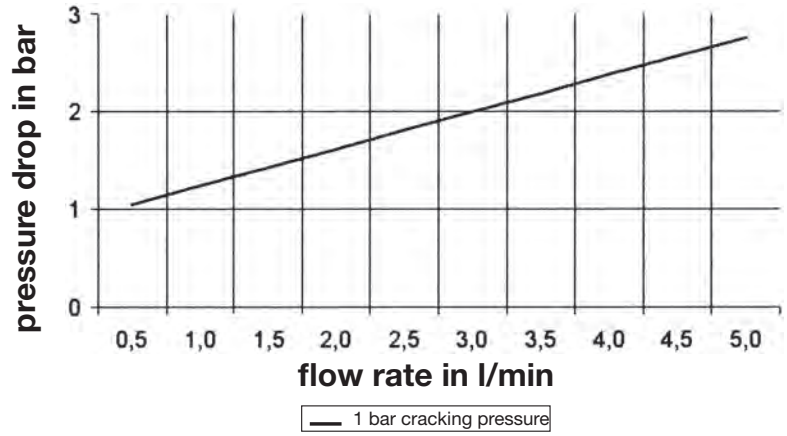

pressure drop tube O.D. 8L/10S; size 5;
RVP 16; DN 5.5

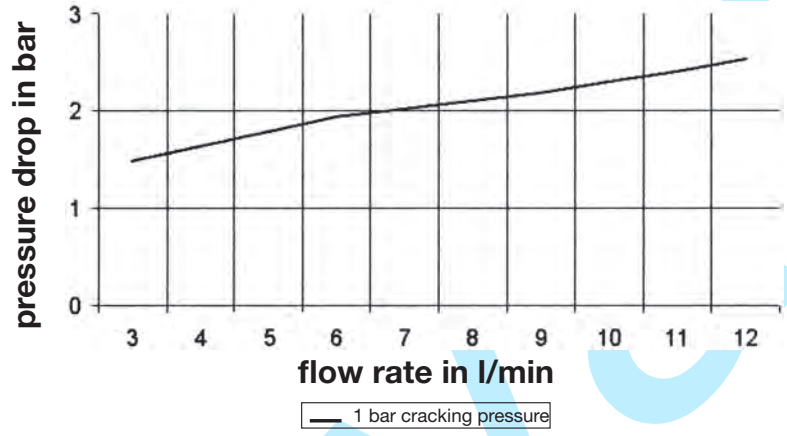

pressure drop tube O.D. 10L/12S; size 6
female BSPP 3/8; RVP 20; DN 7.5

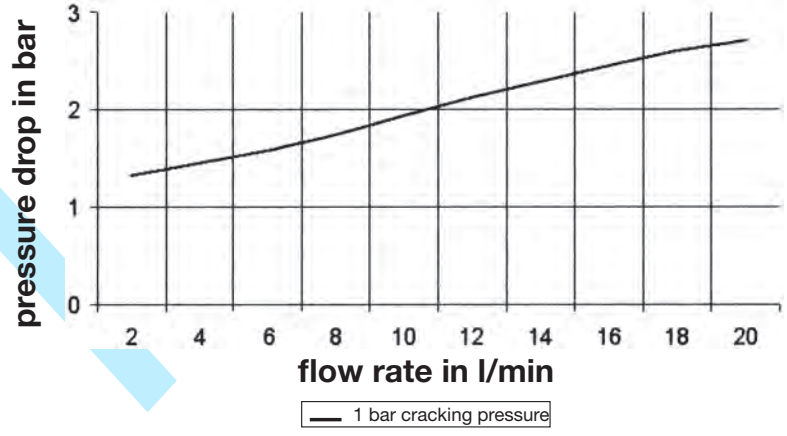

In all diagrams is the peak value of the flow rate in l/min. relating to the maximum permissible flow velocity of 8 m/sec.

pressure drop tube O.D. 12L/14S; size 8; RVP 24; DN 9.5

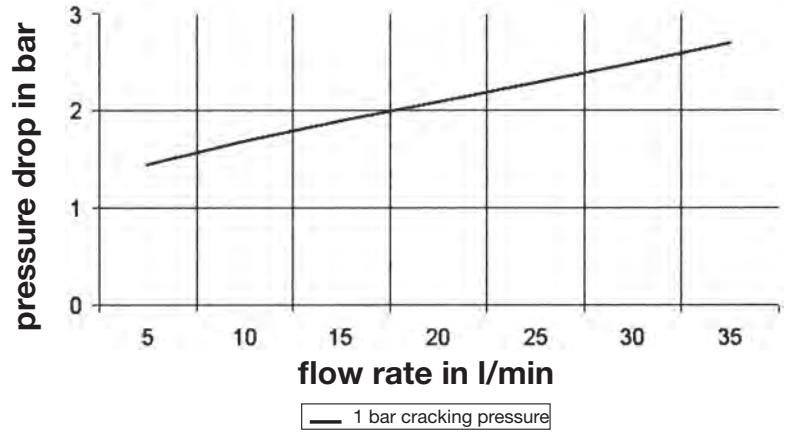

pressure drop tube O.D. 15L/16S; size 10; female BSPP 1/2; RVP 27; DN 11.5

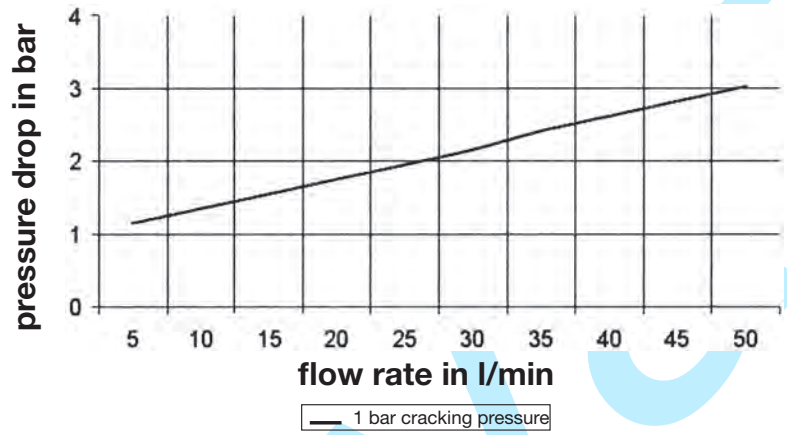

pressure drop tube O.D. 18L/20S; size 12; female BSPP 3/4; RVP 35; DN 15.0

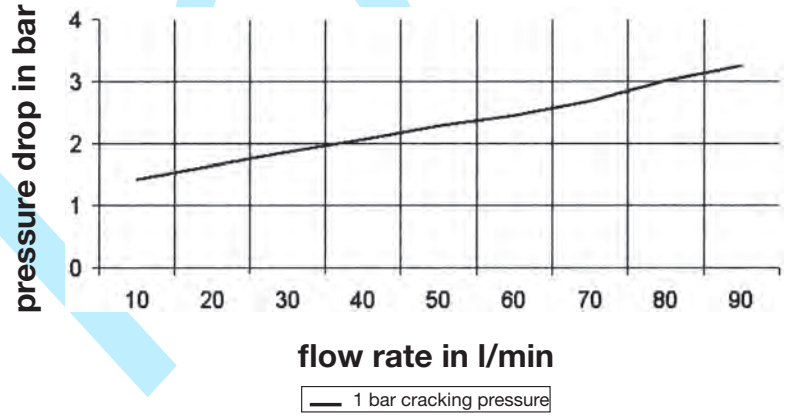

P

In all diagrams is the peak value of the flow rate in l/min. relating to the maximum permissible flow velocity of 8 m/sec.

pressure drop tube O.D. 22L/25S; size 16; female BSPP 1; RVP 40; DN 19

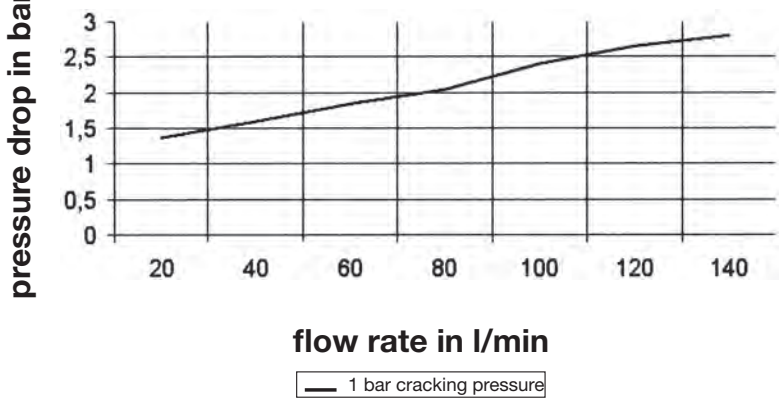

pressure drop tube O.D. 28L/30S; size 20; female BSPP $1^1/_4$; RVP 47; DN 24

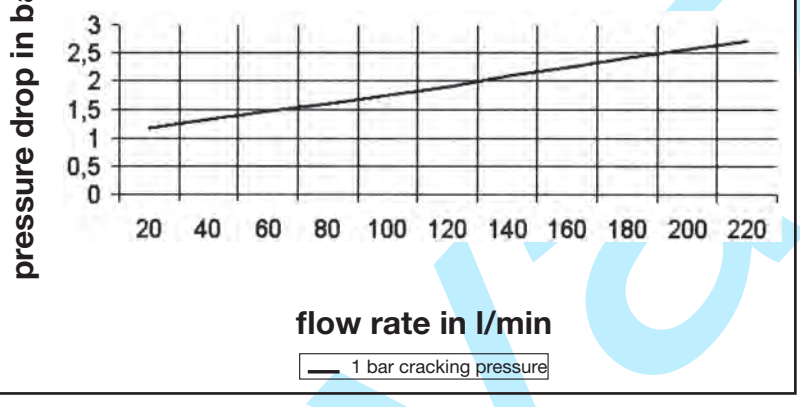

pressure drop tube O.D. 35+42L/38S; size 24; female BSPP $1^1/_2$; RVP 55; DN 29

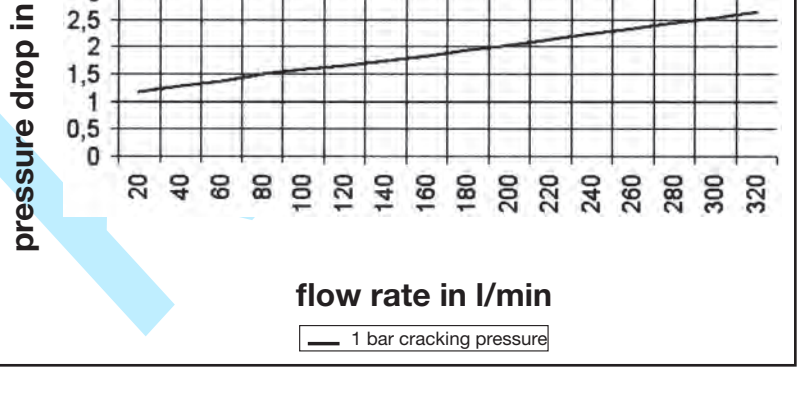

RHD Non return valve

EO 24° cone end / EO 24° cone end

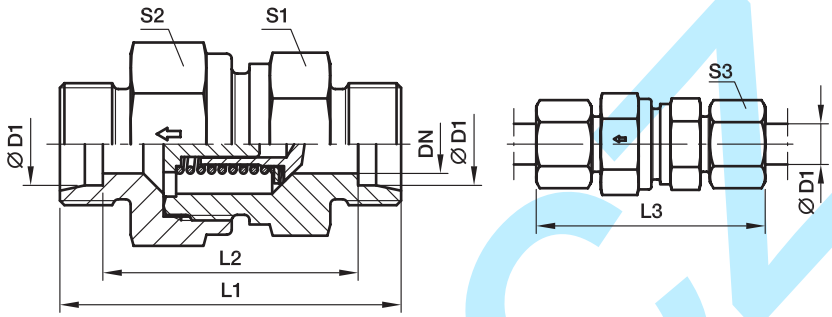

Series	D1	CF DN	71 DN	L1	L2	L3	S1	CF S2	71 S2	S3	Weight g/1 piece	Order code*	PN (bar)[1] CF	PN (bar)[1] 71
L[3]	06	3.5	3.5	43.0	29.0	58.0	17	17	17	14	46	**RHD06LOMD**	400	250
	08	5.5	5.5	44.0	30.0	59.0	19	19	19	17	61	**RHD08LOMD**	400	250
	10	7.5	7.5	55.0	40.5	69.5	22	24	24	19	104	**RHD10LOMD**	400	250
	12	9.5	9.5	58.0	43.5	72.5	27	30	30	22	166	**RHD12LOMD**	400	250
	15	11.0	11.5	62.0	47.5	77.5	27	32	32	27	192	**RHD15LOMD**	400	250
	18	14.0	14.0	67.0	51.5	83.5	36	41	36	32	292	**RHD18LOMD**	400	160
	22	18.0	18.0	77.0	61.5	93.5	41	46	46	36	472	**RHD22LOMD**	250	160
	28	23.0	23.0	85.0	69.5	102.5	50	55	55	41	746	**RHD28LOMD**	250	100
	35	29.0	29.0	96.0	74.0	117.5	60	65	60	50	1062	**RHD35LOMD**	250	100
	42	29.0	29.0	96.0	74.0	119.0	65	70	70	60	1518	**RHD42LOMD**	250	100
S[4]	06	3.5	3.5	48.5	34.5	63.5	19	19	19	17	70	**RHD06SOMD**	420	400
	08	3.5	3.5	48.5	34.5	63.5	19	19	19	19	74	**RHD08SOMD**	420	400
	10	5.5	5.5	55.5	40.5	72.5	22	24	24	22	121	**RHD10SOMD**	420	400
	12	7.5	7.5	57.5	42.5	74.5	24	27	27	24	148	**RHD12SOMD**	420	400
	16	11.0	11.5	68.0	50.5	86.5	32	36	36	30	286	**RHD16SOMD**	420	315
	20	15.0	15.0	76.0	54.5	97.5	41	50	46	36	506	**RHD20SOMD**	420	250
	25	19.0	19.0	83.0	58.5	106.5	46	55	50	46	639	**RHD25SOMD**	420	250
	30	24.0	24.0	97.0	69.5	122.5	60	60	60	50	1157	**RHD30SOMD**	250	250
	38	29.0	29.0	108.0	75.5	136.5	65	70	70	60	1650	**RHD38SOMD**	250	250

[1] Pressure shown = item deliverable

[3] L = light series; [4] S = heavy series

$\frac{\text{PN (bar)}}{10}$ = PN (MPa)

Delivery without nut and ring. Information on ordering complete fittings or alternative sealing materials see page I7.

*Please add the **suffixes** below according to the material/ surface required.

Order code suffixes			
Material	Suffix surface and material	Example	Standard sealing material (no additional suffix needed)
Steel, zinc plated, Cr(VI)-free	CF	RHD06LOMDCF	NBR
Stainless steel	71	RHD06LOMD71	VIT

P

RHV-R-ED Non return valve

EO 24° cone end / Male BSPP thread – ED-seal (ISO 1179)

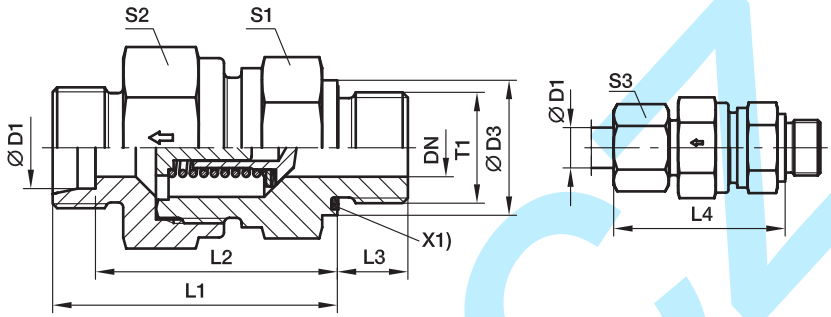

X1) Eolastic sealing

Series	D1	T1	CF DN	71 DN	D3	L1	L2	L3	L4	S1	CF S2	71 S2	S3	Weight g/1 piece	Order code*	PN (bar)[1] CF	PN (bar)[1] 71
L[3]	06	G 1/8 A	3.5	3.5	14	35.0	28.0	8	42.5	17	17	17	14	47	**RHV06LREDOMD**	400	250
	08	G 1/4 A	5.5	5.5	19	37.0	30.0	12	44.5	19	19	19	17	62	**RHV08LREDOMD**	400	250
	10	G 1/4 A	7.5	7.5	19	46.0	38.5	12	53.0	22	24	24	19	105	**RHV10LREDOMD**	400	250
	12	G 3/8 A	9.5	9.5	22	50.0	42.5	12	57.0	27	30	30	22	175	**RHV12LREDOMD**	400	250
	15	G 1/2 A	11.0	11.5	27	53.0	45.5	14	60.5	27	32	32	27	205	**RHV15LREDOMD**	400	250
	18	G 1/2 A	14.0	14.0	27	58.0	50.0	14	66.0	36	41	36	32	294	**RHV18LREDOMD**	400	160
	22	G 3/4 A	18.0	18.0	32	63.0	55.0	16	71.0	41	46	46	36	450	**RHV22LREDOMD**	250	160
	28	G 1 A	23.0	23.0	40	71.0	63.0	18	79.5	50	55	55	41	720	**RHV28LREDOMD**	250	100
	35	G 1 1/4 A	29.0	29.0	50	80.0	69.0	20	90.5	60	65	65	50	1050	**RHV35LREDOMD**	250	100
	42	G 1 1/2 A	29.0	29.0	55	80.0	68.5	22	91.0	65	70	70	60	1560	**RHV42LREDOMD**	250	100
S[4]	06	G 1/4 A	3.5	3.5	19	38.5	31.5	12	46.0	19	19	19	17	73	**RHV06SREDOMD**	420	400
	08	G 1/4 A	3.5	3.5	19	38.5	31.5	12	46.0	19	19	19	19	79	**RHV08SREDOMD**	420	400
	10	G 3/8 A	5.5	5.5	22	45.5	38.0	12	54.0	22	24	24	22	132	**RHV10SREDOMD**	420	400
	12	G 3/8 A	7.5	7.5	22	48.5	41.0	12	57.0	24	27	27	24	153	**RHV12SREDOMD**	420	400
	16	G 1/2 A	11.0	11.5	27	57.0	48.0	14	66.0	32	36	36	30	293	**RHV16SREDOMD**	420	315
	20	G 3/4 A	15.0	15.0	32	63.0	52.0	16	73.5	41	50	46	36	511	**RHV20SREDOMD**	420	250
	25	G 1 A	19.0	19.0	40	67.0	54.5	18	78.5	46	55	50	46	648	**RHV25SREDOMD**	420	250
	30	G 1 1/4 A	24.0	24.0	50	78.0	64.0	20	90.5	60	60	60	50	1176	**RHV30SREDOMD**	250	250
	38	G 1 1/2 A	29.0	29.0	55	86.0	69.5	22	100.0	65	70	70	60	1624	**RHV38SREDOMD**	250	250

[1] Pressure shown = item deliverable

[3] L = light series; [4] S = heavy series

$\frac{\text{PN (bar)}}{10}$ = PN (MPa)

Delivery without nut and ring. Information on ordering complete fittings or alternative sealing materials see page I7.

*Please add the **suffixes** below according to the material/ surface required.

Order code suffixes			
Material	Suffix surface and material	Example	Standard sealing material (no additional suffix needed)
Steel, zinc plated, Cr(VI)-free	CF	RHV06LREDOMDCF	NBR
Stainless steel	71	RHV06LREDOMD71	VIT

RHZ-R-ED Non return valve

Male BSPP thread – ED-seal (ISO 1179) / EO 24° cone end

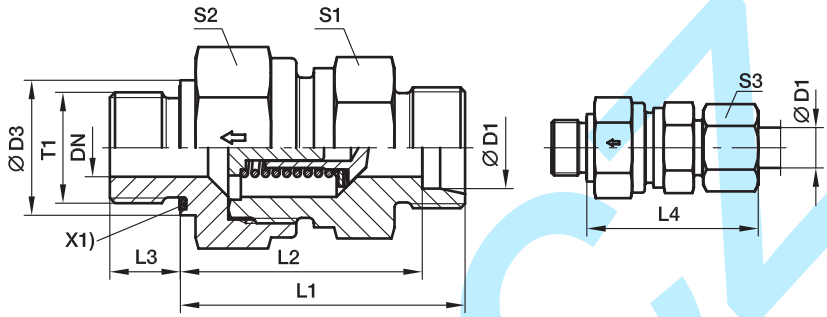

X1) Eolastic sealing

Series	D1	T1	CF DN	71 DN	D3	L1	L2	L3	L4	S1	CF S2	71 S2	S3	Weight g/1 piece	Order code*	PN (bar)[1] CF	PN (bar)[1] 71
L[3]	06	G 1/8 A	3.5	3.5	14	33.5	26.5	8	41.0	17	17	17	14	44	**RHZ06LREDOMD**	400	250
	08	G 1/4 A	5.5	5.5	19	35.5	28.5	12	43.0	19	19	19	17	59	**RHZ08LREDOMD**	400	250
	10	G 1/4 A	7.5	7.5	19	46.0	38.5	12	53.0	22	24	24	19	125	**RHZ10LREDOMD**	400	250
	12	G 3/8 A	9.5	9.5	22	48.0	40.5	12	55.0	27	30	30	22	161	**RHZ12LREDOMD**	400	250
	15	G 1/2 A	11.0	11.5	27	50.0	42.5	14	57.5	27	32	32	27	186	**RHZ15LREDOMD**	400	250
	18	G 1/2 A	14.0	14.0	27	56.0	48.0	14	64.0	36	41	36	32	275	**RHZ18LREDOMD**	400	160
	22	G 3/4 A	18.0	18.0	32	64.0	56.0	16	72.0	41	46	46	36	463	**RHZ22LREDOMD**	250	160
	28	G 1 A	23.0	23.0	40	72.0	64.0	18	80.5	50	55	55	41	721	**RHZ28LREDOMD**	250	100
	35	G 1 1/4 A	29.0	29.0	50	81.0	70.0	20	91.5	60	65	65	50	1073	**RHZ35LREDOMD**	250	100
	42	G 1 1/2 A	29.0	29.0	55	82.0	70.5	22	93.0	65	70	70	60	1602	**RHZ42LREDOMD**	250	100
S[4]	06	G 1/4 A	3.5	3.5	19	38.5	31.5	12	46.0	19	19	19	17	71	**RHZ06SREDOMD**	420	400
	08	G 1/4 A	3.5	3.5	19	38.5	31.5	12	46.0	19	19	19	19	74	**RHZ08SREDOMD**	420	400
	10	G 3/8 A	5.5	5.5	22	45.5	38.0	12	54.0	22	24	24	22	128	**RHZ10SREDOMD**	420	400
	12	G 3/8 A	7.5	7.5	22	48.5	41.0	12	57.0	24	27	27	24	152	**RHZ12SREDOMD**	420	400
	16	G 1/2 A	11.0	11.5	27	55.0	46.0	14	64.0	32	36	36	30	275	**RHZ16SREDOMD**	420	315
	20	G 3/4 A	15.0	15.0	32	61.0	50.0	16	71.5	41	50	46	36	490	**RHZ20SREDOMD**	420	250
	25	G 1 A	19.0	19.0	40	67.0	54.5	18	78.5	46	55	50	46	647	**RHZ25SREDOMD**	420	250
	30	G 1 1/4 A	24.0	24.0	50	78.0	64.0	20	90.5	60	60	60	50	1180	**RHZ30SREDOMD**	250	250
	38	G 1 1/2 A	29.0	29.0	55	88.0	71.5	22	102.0	65	70	70	60	1670	**RHZ38SREDOMD**	250	250

[1] Pressure shown = item deliverable

[3] L = light series; [4] S = heavy series

$\frac{PN\ (bar)}{10} = PN\ (MPa)$

Delivery without nut and ring. Information on ordering complete fittings or alternative sealing materials see page I7.

*Please add the **suffixes** below according to the material/ surface required.

Order code suffixes			
Material	Suffix surface and material	Example	Standard sealing material (no additional suffix needed)
Steel, zinc plated, Cr(VI)-free	CF	RHZ06LREDOMDCF	NBR
Stainless steel	71	RHZ06LREDOMD71	VIT

P

RHV-M-ED Non return valve

EO 24° cone end / Male metric thread – ED-seal (ISO 9974)

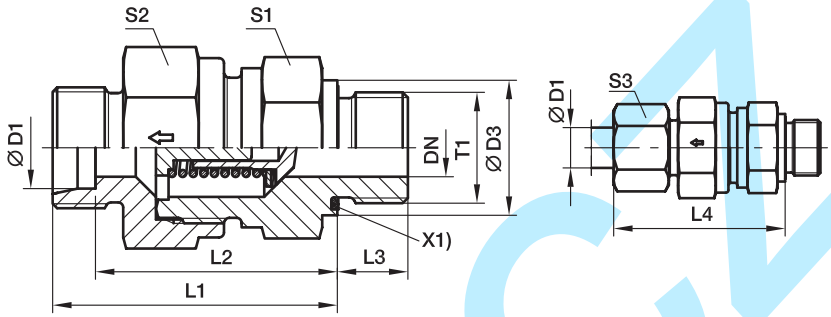

X1) Eolastic sealing

Series	D1	T1	CF DN	71 DN	D3	L1	L2	L3	L4	S1	CF S2	71 S2	S3	Weight g/1 piece	Order code*	PN (bar)[1] CF	PN (bar)[1] 71
L[3]	06	M 10×1.0	3.5	3.5	14	35.0	28.0	8	42.5	17	17	17	14	46	**RHV06LMEDOMD**	400	250
	08	M 12×1.5	5.5	5.5	17	37.0	29.5	12	43.5	19	19	19	17	58	**RHV08LMEDOMD**	400	250
	10	M 14×1.5	7.5	7.5	19	46.0	38.5	12	53.0	22	24	44	19	108	**RHV10LMEDOMD**	400	250
	12	M 16×1.5	9.5	9.5	22	50.0	42.5	12	57.0	27	30	30	22	173	**RHV12LMEDOMD**	400	250
	15	M 18×1.5	11.0	11.5	24	53.0	45.5	12	60.5	27	32	32	27	192	**RHV15LMEDOMD**	400	250
	18	M 22×1.5	14.0	14.0	27	58.0	50.0	14	66.0	36	41	36	32	298	**RHV18LMEDOMD**	400	160
	22	M 26×1.5	18.0	18.0	32	63.0	55.0	16	71.0	41	46	46	36	446	**RHV22LMEDOMD**	250	160
	28	M 33×2.0	23.0	23.0	40	71.0	63.0	18	79.5	50	55	55	41	722	**RHV28LMEDOMD**	250	100
	35	M 42×2.0	29.0	29.0	50	80.0	69.0	20	90.5	60	65	65	50	1053	**RHV35LMEDOMD**	250	100
	42	M 48×2.0	29.0	29.0	55	80.0	68.5	22	91.0	65	70	70	60	1563	**RHV42LMEDOMD**	250	100
S[4]	06	M 12×1.5	3.5	3.5	17	38.5	31.5	12	46.0	19	19	19	17	70	**RHV06SMEDOMD**	420	400
	08	M 14×1.5	3.5	3.5	19	38.5	31.5	12	46.0	19	19	19	19	76	**RHV08SMEDOMD**	420	400
	10	M 16×1.5	5.5	5.5	22	45.5	38.0	12	54.0	22	24	24	22	124	**RHV10SMEDOMD**	420	400
	12	M 18×1.5	7.5	7.5	24	48.5	41.0	12	57.0	24	27	27	24	157	**RHV12SMEDOMD**	420	400
	16	M 22×1.5	11.0	11.5	27	57.0	48.0	14	66.0	32	36	36	30	296	**RHV16SMEDOMD**	420	315
	20	M 27×2.0	15.0	15.0	32	63.0	52.0	16	73.5	41	50	46	36	521	**RHV20SMEDOMD**	420	250
	25	M 33×2.0	19.0	19.0	40	67.0	54.5	18	78.5	46	55	50	46	648	**RHV25SMEDOMD**	420	250
	30	M 42×2.0	24.0	24.0	50	78.0	64.0	20	90.5	60	60	60	50	1178	**RHV30SMEDOMD**	250	250
	38	M 48×2.0	29.0	29.0	55	86.0	69.5	22	100.0	65	70	70	60	1627	**RHV38SMEDOMD**	250	250

[1] Pressure shown = item deliverable

[3] L = light series; [4] S = heavy series

$\frac{\text{PN (bar)}}{10}$ = PN (MPa)

Delivery without nut and ring. Information on ordering complete fittings or alternative sealing materials see page I7.

*Please add the **suffixes** below according to the material/ surface required.

Order code suffixes			
Material	Suffix surface and material	Example	Standard sealing material (no additional suffix needed)
Steel, zinc plated, Cr(VI)-free	CF	RHV06LMEDOMDCF	NBR
Stainless steel	71	RHV06LMEDOMD71	VIT

KOVOMAT

RHZ-M-ED Non return valve

Male metric thread – ED-seal (ISO 9974) / EO 24° cone end

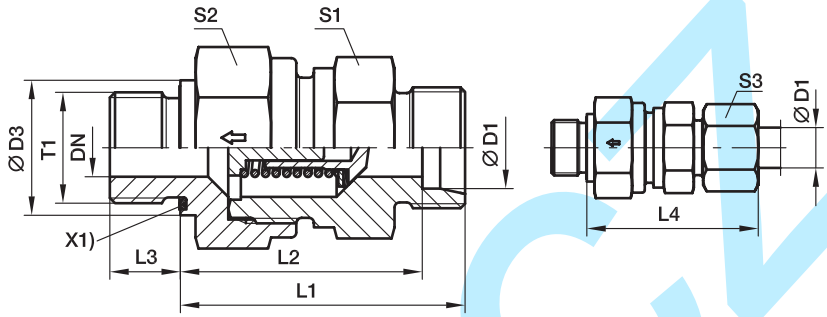

X1) Eolastic sealing

Series	D1	T1	CF DN	71 DN	D3	L1	L2	L3	L4	S1	CF S2	71 S2	S3	Weight g/1 piece	Order code*	PN (bar)[1] CF	PN (bar)[1] 71
L[3]	06	M 10×1.0	3.5	3.5	14	33.5	26.5	8	41.0	17	17	17	14	44	**RHZ06LMEDOMD**	400	250
	08	M 12×1.5	5.5	5.5	17	35.5	28.5	12	43.0	19	19	19	17	58	**RHZ08LMEDOMD**	400	250
	10	M 14×1.5	7.5	7.5	19	46.0	38.5	12	53.0	22	24	24	19	104	**RHZ10LMEDOMD**	400	250
	12	M 16×1.5	9.5	9.5	22	48.0	40.5	12	55.0	27	30	30	22	169	**RHZ12LMEDOMD**	400	250
	15	M 18×1.5	11.0	11.5	24	50.0	42.5	12	57.5	27	32	32	27	174	**RHZ15LMEDOMD**	400	250
	18	M 22×1.5	14.0	14.0	27	56.0	48.0	14	64.0	36	41	36	32	279	**RHZ18LMEDOMD**	400	160
	22	M 26×1.5	18.0	18.0	32	64.0	56.0	16	72.0	41	46	46	36	459	**RHZ22LMEDOMD**	250	160
	28	M 33×2.0	23.0	23.0	40	72.0	64.0	18	80.5	50	55	55	41	721	**RHZ28LMEDOMD**	250	100
	35	M 42×2.0	29.0	29.0	50	81.0	70.0	20	91.5	60	65	65	50	1078	**RHZ35LMEDOMD**	250	100
	42	M 48×2.0	29.0	29.0	55	82.0	70.5	22	93.0	65	70	70	60	1601	**RHZ42LMEDOMD**	250	100
S[4]	06	M 12×1.5	3.5	3.5	17	38.5	31.5	12	46.0	19	19	19	17	70	**RHZ06SMEDOMD**	420	400
	08	M 14×1.5	3.5	3.5	19	38.5	31.5	12	46.0	19	19	19	19	75	**RHZ08SMEDOMD**	420	400
	10	M 16×1.5	5.5	5.5	22	45.5	38.0	12	54.0	22	24	24	22	123	**RHZ10SMEDOMD**	420	400
	12	M 18×1.5	7.5	7.5	24	48.5	41.0	12	57.0	24	27	27	24	157	**RHZ12SMEDOMD**	420	400
	16	M 22×1.5	11.0	11.5	27	55.0	46.0	14	64.0	32	36	36	30	279	**RHZ16SMEDOMD**	420	315
	20	M 27×2.0	15.0	15.0	32	61.0	50.0	16	71.5	41	50	46	36	487	**RHZ20SMEDOMD**	420	250
	25	M 33×2.0	19.0	19.0	40	67.0	54.5	18	78.5	46	55	50	46	647	**RHZ25SMEDOMD**	420	250
	30	M 42×2.0	24.0	24.0	50	78.0	64.0	20	90.5	60	60	60	50	1180	**RHZ30SMEDOMD**	250	250
	38	M 48×2.0	29.0	29.0	55	88.0	71.5	22	102.0	65	70	70	60	1669	**RHZ38SMEDOMD**	250	250

[1] Pressure shown = item deliverable

[3] L = light series; [4] S = heavy series

$\frac{\text{PN (bar)}}{10}$ = PN (MPa)

Delivery without nut and ring. Information on ordering complete fittings or alternative sealing materials see page I7.

*Please add the **suffixes** below according to the material/ surface required.

Order code suffixes			
Material	Suffix surface and material	Example	Standard sealing material (no additional suffix needed)
Steel, zinc plated, Cr(VI)-free	CF	RHZ06LMEDOMDCF	NBR
Stainless steel	71	RHZ06LMEDOMD71	VIT

RHDI Non return valve

Female BSPP thread (ISO 1179-1) / Female BSPP thread (ISO 1179-1)

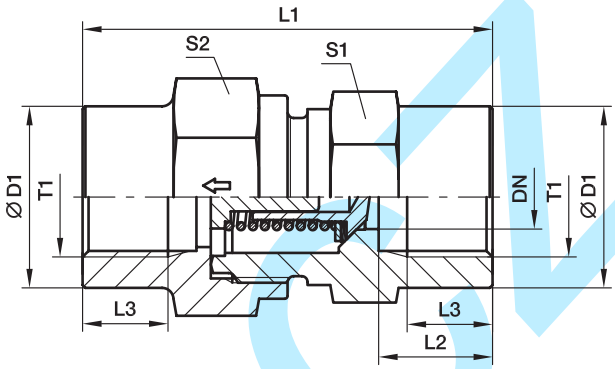

Series	T1	DN	D1	L1	L2	L3	S1	S2	Weight g/1 piece	Order code*	PN (bar)[1] CF	PN (bar)[1] 71
L[3]	G 1/8	3.5	19	42.5	12.0	8.0	19	19	76	**RHDI1/8**	400	400
	G 1/4	3.5	19	51.0	16.0	12.0	19	19	82	**RHDI1/4**	400	400
	G 3/8	7.5	24	60.0	17.0	12.0	24	27	157	**RHDI3/8**	400	400
	G 1/2	11.5	32	72.0	20.0	15.0	32	36	344	**RHDI1/2**	315	315
	G 3/4	15.0	41	84.0	22.0	16.5	41	46	664	**RHDI3/4**	250	250
	G 1	19.0	46	95.0	25.5	19.0	46	50	821	**RHDI1**	250	250
	G 1 1/4	24.0	60	110.0	28.0	21.5	60	60	1581	**RHDI11/4**	250	250
	G 1 1/2	29.0	65	114.0	28.5	22.0	65	70	1919	**RHDI11/2**	250	250

[1]) Pressure shown = item deliverable

[3]) L = light series

$\frac{\text{PN (bar)}}{10}$ = PN (MPa)

Delivery without nut and ring. Information on ordering complete fittings or alternative sealing materials see page I7.

*Please add the **suffixes** below according to the material/ surface required.

Order code suffixes			
Material	Suffix surface and material	Example	Standard sealing material (no additional suffix needed)
Steel, zinc plated, Cr(VI)-free	CF	RHDI1/8CF	NBR
Stainless steel	71	RHDI1/871	VIT

Kovaz.sk

RVP Non return valve cartridge

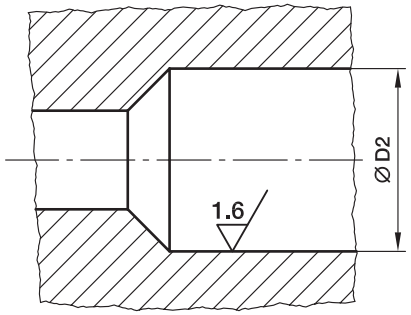

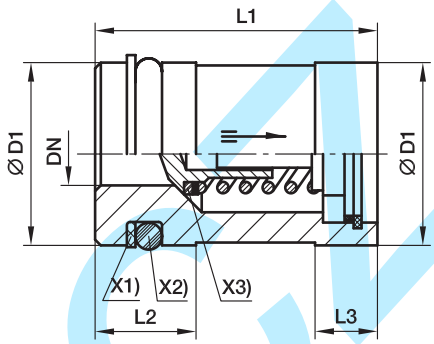

X1) Supporting ring PTFE
X2) O-ring NBR
X3) Sealing disc NBR

Valve ITL	DN	D1	D2	L1 ± 0,15	L2	L3	O-ring	Supporting ring	Weight g/1 piece	Order code*	PN (bar)[1] CF	PN (bar)[1] 71
6-L/6 & 8-S	3.5	12.945 ± 0.055	13 $^{+0.12}_{+0.05}$	23.15	9.5	6.0	8.3×2.4	SRA 13-2.05-1.0	21	**RVP13**	420	400
8-L/10-S	5.5	15.945 ± 0.055	16 $^{+0.12}_{+0.05}$	26.65	9.5	6.5	11.3×2.4	SRA 16-2.05-1.0	32	**RVP16**	420	400
10-L/12-S	7.5	19.935 ± 0.065	20 $^{+0.142}_{+0.065}$	30.15	9.5	6.5	15.3×2.4	SRA 20-2.05-1.0	54	**RVP20**	420	400
12-L/14-S	9.5	23.935 ± 0.065	24 $^{+0.149}_{+0.065}$	35.15	12.0	7.5	18.2×3	SRA 24-2.6-1.0	80	**RVP24**	420	315
15-L/16-S	11.5	26.935 ± 0.065	27 $^{+0.149}_{+0.065}$	38.15	12.0	7.5	21.2×3	SRA 27-2.6-1.0	105	**RVP27**	420	315
18-L/20-S	15.0	34.92 ± 0.08	35 $^{+0.18}_{+0.08}$	44.65	12.0	9.5	29.2×3	SRA 35-2.5-1.0	204	**RVP35**	420	250
22-L/25-S	19.0	39.92 ± 0.08	40 $^{+0.18}_{+0.08}$	50.65	12.0	11.0	34.2×3	SRA 40-2.5-1.0	275	**RVP40**	420	250
28-L/30-S	24.0	46.92 ± 0.08	47 $^{+0.18}_{+0.08}$	60.15	13.0	13.0	41.0×3	SRA 47-2.6-1.5	412	**RVP47**	250	250
35-L/38-S	29.0	54.905 ± 0.095	55 $^{+0.22}_{+0.01}$	70.15	16.0	13.0	44.2×5.7	SRA 55-5.1-1.5	607	**RVP55**	250	250

[1]) Pressure shown = item deliverable

$\frac{\text{PN (bar)}}{10}$ = PN (MPa)

Delivery without nut and ring. Information on ordering complete fittings or alternative sealing materials see page I7.

*Please add the **suffixes** below according to the material/ surface required.

Order code suffixes			
Material	Suffix surface and material	Example	Standard sealing material (no additional suffix needed)
Steel, zinc plated, Cr(VI)-free	CF	RVP13CF	NBR
Stainless steel	71	RVP1371	VIT

KOVAL

I-TL Internal parts of non return valve

X1) poppet
X2) sealing disc (smooth side to the poppet)
X3) cover disc
X4) spring
X5) passage disc

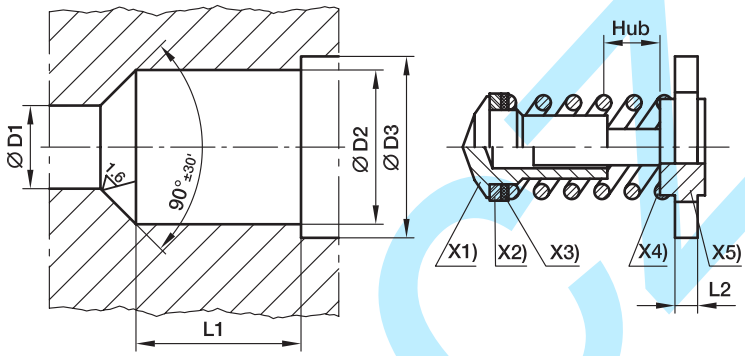

Series	Tube O.D.	D1 +0.1	D2 +0.1	D3 +0.1	L1 ±0.1	L2	Hub	Weight g/1 piece	Order code*	PN (bar)[1] CF	PN (bar)[1] 71
L/S/S	06/06/08	3.5	7.5	8.6	8.2	2.0	1.0	2	**ITL06L/06+08S**	*	*
L/S	08/10	5.5	10.2	11.6	11.0	2.0	1.7	4	**ITL08L/10S**	*	*
L/S	10/12	7.5	13.0	14.1	14.0	2.0	2.3	7	**ITL10L/12S**	*	*
L/S	12/14	9.5	16.7	18.1	16.5	2.5	2.9	13	**ITL12L/14S**	*	*
L/S	15/16	11.5	19.5	20.6	19.0	2.5	3.5	18	**ITL15L/16S**	*	*
L/S	18/20	15.0	25.2	27.1	22.5	3.0	4.4	37	**ITL18L/20S**	*	*
L/S	22/25	19.0	30.8	32.6	27.0	3.0	5.5	54	**ITL22L/25S**	*	*
L/S	28/30	24.0	38.6	40.6	32.5	3.5	7.3	107	**ITL28L/30S**	*	*
L/L/S	35/38/42	29.0	45.7	48.1	37.5	3.5	8.9	144	**ITL35L+42I/38S**	*	*

* = item deliverable

Delivery without nut and ring. Information on ordering complete fittings or alternative sealing materials see page I7.

*Please add the **suffixes** below according to the material/ surface required.

Order code suffixes			
Material	Suffix surface and material	Example	Standard sealing material (no additional suffix needed)
Steel, zinc plated, Cr(VI)-free	CF	ITL06L/06+08S	NBR
Stainless steel	71	ITL06L71/06+08S	VIT

Kovaci

RHD/V/Z Non return valves with O-Lok® or Triple-Lok® connections

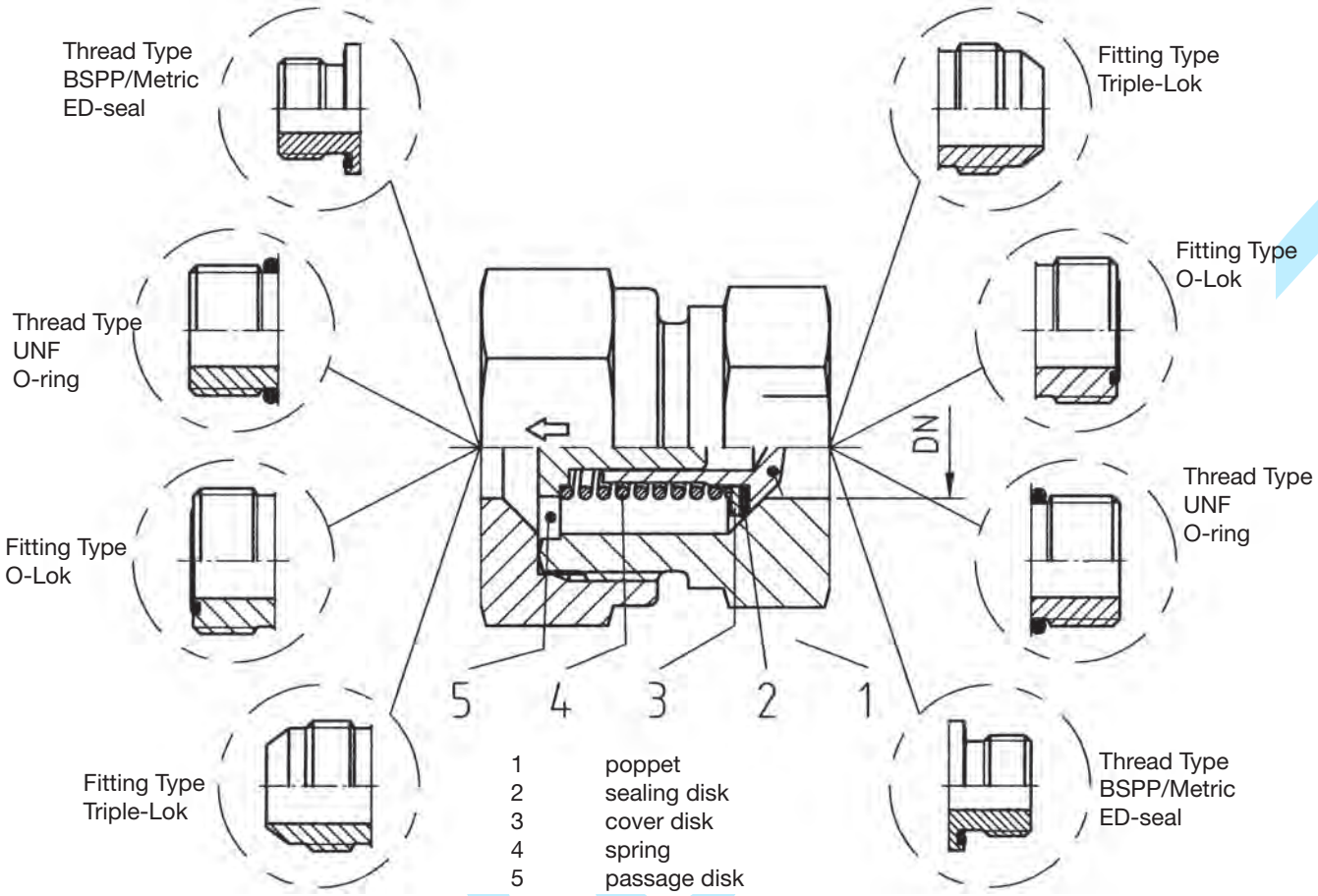

1	poppet
2	sealing disk
3	cover disk
4	spring
5	passage disk
DN	Nominal diameter

Material:

- Steel zinc-plated CF Cr(VI)-free, seals in NBR (e.g. Perbunan)
- Internal parts in stainless steel with FKM also available on request.

Perbunan = registered trademark of Bayer

P

RHDMLOS Non return valve

O-Lok® ORFS end / O-Lok® ORFS end

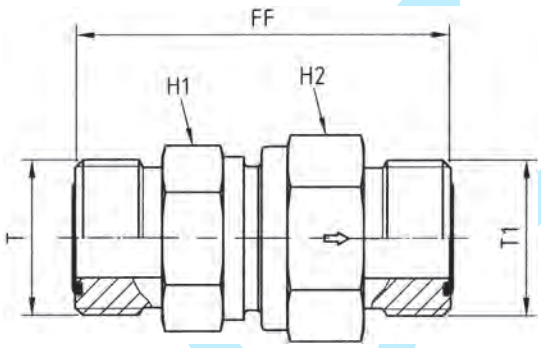

Tube 1 O.D.		Tube 2 O.D.		ORFS (UN/UNF) thread	ORFS (UN/UNF) thread				DN (Nom.	Weight		PN (bar)[1]
mm	Inch	mm	Inch	T	T1	H1	H2	FF	diam.)	g/1 piece	Order code*	CF
6	1/4	6	1/4	9/16-18 UNF	9/16-18 UNF	19	19	44.5	3.5	108	**4RHDMLOS**	420
8, 10	5/16, 3/8	8, 10	5/16, 3/8	11/16-16 UNF	11/16-16 UNF	22	24	53.5	5.5	188	**6RHDMLOS**	420
12	1/2	12	1/2	13/16-16 UNF	13/16-16 UNF	24	27	59.5	7.5	223	**8RHDMLOS**	420
14, 15, 16	5/8	14, 15, 16	5/8	1-14 UNF	1-14 UNF	32	36	70.5	11.5	428	**10RHDMLOS**	420
18, 20	3/4	18, 20	3/4	1 3/16-12 UNF	1 3/16-12 UNF	41	46	77.5	15.0	731	**12RHDMLOS**	420
22, 25	1	22, 25	1	1 7/16-12 UNF	1 7/16-12 UNF	46	50	81.5	19.0	1076	**16RHDMLOS**	420
28, 30, 32	1 1/4	28, 30, 32	1 1/4	1 11/16-12 UNF	1 11/16-12 UNF	60	60	91.5	24.0	1630	**20RHDMLOS**	250
35, 38	1 1/2	35, 38	1 1/2	2-12 UNF	2-12 UNF	65	70	98.5	29.0	2362	**24RHDMLOS**	250

[1] Pressure shown = item deliverable

$\frac{\text{PN (bar)}}{10}$ = PN (MPa)

Information on ordering complete fittings or alternative sealing materials see page I7.

*Please add the **suffixes** below according to the material/ surface required.

Order code suffixes			
Material	Suffix surface and material	Example	Standard sealing material (no additional suffix needed)
Steel, zinc plated, Cr(VI)-free	CF	4RHDMLOSCF	NBR

Kovalent

RHV42EDMLOS Non return valve

Male BSPP thread – ED-seal (ISO 1179) / O-Lok® ORFS end

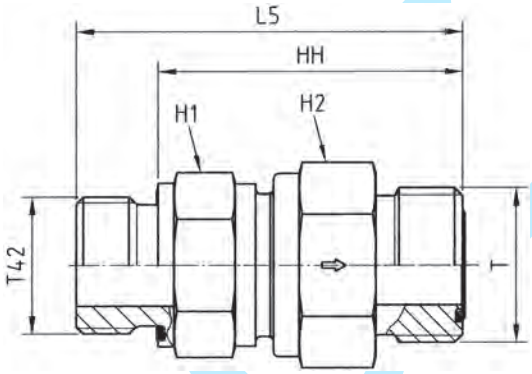

Tube O.D. mm	Tube O.D. Inch	BSPP thread T42	ORFS (UN/UNF) T	H1	H2	L5	HH	DN (Nom. diam.)	Weight g/1 piece	Order code*	PN (bar)[1] CF
6	1/4	G 1/8	9/16-18 UNF	19	19	44.5	36.5	3.5	92	**4RHV42EDMLOS**	420
8, 10	5/16, 3/8	G 1/4	11/16-16 UNF	24	27	56.5	44.5	6.5	165	**6RHV42EDMLOS**	420
12	1/2	G 3/8	13/16-16 UNF	24	27	61.5	49.5	7.5	191	**8RHV42EDMLOS**	420
14, 15, 16	5/8	G 1/2	1-14 UNF	32	36	70.0	56.0	11.5	366	**10RHV42EDMLOS**	420
18, 20	3/4	G 3/4	1 3/16-12 UNF	41	46	77.5	63.5	15.0	631	**12RHV42EDMLOS**	420
22, 25	1	G 1	1 7/16-12 UNF	46	50	84.0	66.0	19.0	863	**16RHV42EDMLOS**	420
28, 30, 32	1 1/4	G 1 1/4	1 11/16-12 UNF	60	60	95.0	75.0	24.0	1403	**20RHV42EDMLOS**	250
35, 38	1 1/2	G 1 1/2	2-12 UNF	65	70	105.0	83.0	29.0	1969	**24RHV42EDMLOS**	250

[1] Pressure shown = item deliverable

$\frac{PN\ (bar)}{10}$ = PN (MPa)

Information on ordering complete fittings or alternative sealing materials see page I7.

*Please add the **suffixes** below according to the material/ surface required.

Order code suffixes			
Material	Suffix surface and material	Example	Standard sealing material (no additional suffix needed)
Steel, zinc plated, Cr(VI)-free	CF	4RHV42EDMLOSCF	NBR

Kovalent

RHZ42EDMLOS Non return valve

O-Lok® ORFS end / Male BSPP thread – ED-seal (ISO 1179)

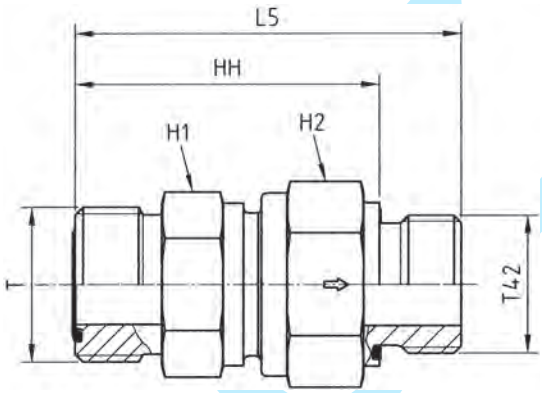

Tube O.D. mm	Tube O.D. Inch	BSPP thread T42	ORFS (UN/UNF) thread T	H1	H2	L5	HH	DN (Nom. diam.)	Weight g/1 piece	Order code*	PN (bar)[1] CF
6	1/4	G 1/8	9/16-18 UNF	19	19	44.5	36.5	3.5	91	**4RHZ42EDMLOS**	420
8, 10	5/16, 3/8	G 1/4	11/16-16 UNF	24	27	56.5	44.5	6.5	161	**6RHZ42EDMLOS**	420
12	1/2	G 3/8	13/16-16 UNF	24	27	61.5	49.5	7.5	190	**8RHZ42EDMLOS**	420
14, 15, 16	5/8	G 1/2	1-14 UNF	32	36	70.0	56.0	11.5	348	**10RHZ42EDMLOS**	420
18, 20	3/4	G 3/4	1 3/16-12 UNF	41	46	77.5	53.5	15.0	634	**12RHZ42EDMLOS**	420
22, 25	1	G 1	1 7/16-12 UNF	46	50	84.0	66.0	19.0	863	**16RHZ42EDMLOS**	420
28, 30, 32	1 1/4	G 1 1/4	1 11/16-12 UNF	60	60	95.0	75.0	24.0	1397	**20RHZ42EDMLOS**	250
35, 38	1 1/2	G 1 1/2	2-12 UNF	65	70	105.0	83.0	29.0	2001	**24RHZ42EDMLOS**	250

[1]) Pressure shown = item deliverable

$\frac{\text{PN (bar)}}{10}$ = PN (MPa)

Information on ordering complete fittings or alternative sealing materials see page I7.

*Please add the **suffixes** below according to the material/ surface required.

Order code suffixes			
Material	Suffix surface and material	Example	Standard sealing material (no additional suffix needed)
Steel, zinc plated, Cr(VI)-free	CF	4RHZ42EDMLOSCF	NBR

Kovai

RHV5OMLOS Non return valve

Male UN/UNF thread – O-ring (ISO 11926) / O-Lok® ORFS end

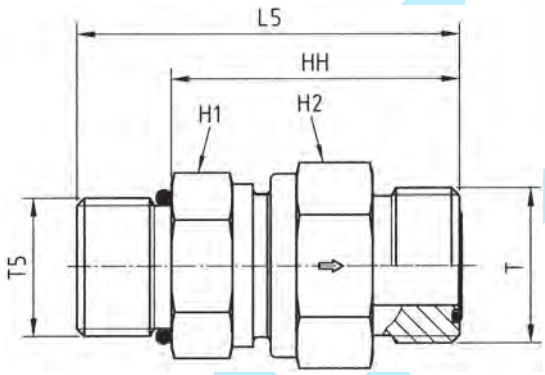

Tube O.D. mm	Tube O.D. Inch	UNF male thread T5	ORFS (UN/UNF) thread T	H1	H2	L5	HH	DN (Nom. diam.)	Weight g/1 piece	Order code*	PN (bar)[1] CF
6	1/4	7/16-20 UNF	9/16-18 UNF	19	19	45.5	34.5	3.5	92	**4RHV5OMLOS**	420
8, 10	5/16, 3/8	9/16-18 UNF	11/16-16 UNF	22	24	54.5	42.5	5.5	165	**6RHV5OMLOS**	420
12	1/2	3/4-16 UNF	13/16-16 UNF	24	27	60.5	46.5	5.5	165	**8RHV5OMLOS**	420
14, 15, 16	5/8	7/8-14 UNF	1-14 UNF	32	36	71.0	55.0	11.5	366	**10RHV5OMLOS**	420
18, 20	3/4	1 1/16-12 UN	1 3/16-12 UNF	41	46	79.0	60.5	15.0	631	**12RHV5OMLOS**	420
22, 25	1	1 5/16-12 UN	1 7/16-12 UNF	46	50	82.5	64.0	19.0	863	**16RHV5OMLOS**	420
28, 30, 32	1 1/4	1 5/8-12 UN	1 11/16-12 UNF	60	60	92.5	74.0	24.0	1403	**20RHV5OMLOS**	250
35, 38	1 1/2	1 7/8-12 UN	2-12 UNF	65	70	99.5	81.0	29.0	1969	**24RHV5OMLOS**	250

[1]) Pressure shown = item deliverable

$\frac{\text{PN (bar)}}{10}$ = PN (MPa)

Information on ordering complete fittings or alternative sealing materials see page I7.

*Please add the **suffixes** below according to the material/ surface required.

Order code suffixes			
Material	Suffix surface and material	Example	Standard sealing material (no additional suffix needed)
Steel, zinc plated, Cr(VI)-free	CF	RHV5OMLOSCF	NBR

RHZ5OMLOS Non return valve

O-Lok® ORFS end / Male UN/UNF thread – O-ring (ISO 11926)

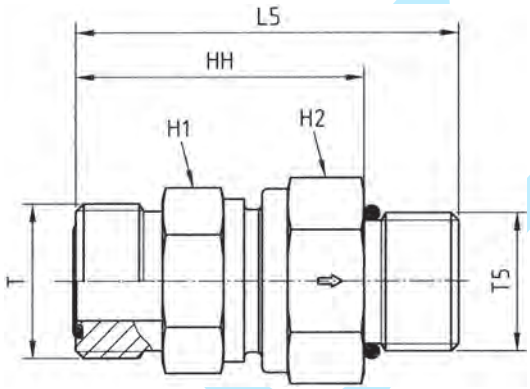

Tube O.D. mm	Tube O.D. Inch	UNF male thread T5	ORFS (UN/UNF) thread T	H1	H2	L5	HH	DN (Nom. diam.)	Weight g/1 piece	Order code*	PN (bar)[1] CF
6	1/4	7/16-20 UNF	9/16-18 UNF	19	19	45.5	34.5	3.5	91	**4RHZ5OMLOS**	420
8, 10	5/16, 3/8	9/16-18 UNF	11/16-16 UNF	22	24	54.5	42.5	5.5	161	**6RHZ5OMLOS**	420
12	1/2	3/4-16 UNF	13/16-16 UNF	24	27	60.5	46.5	5.5	161	**8RHZ5OMLOS**	420
14, 15, 16	5/8	7/8-14 UNF	1-14 UNF	32	36	71.0	55.0	11.5	348	**10RHZ5OMLOS**	420
18, 20	3/4	1 1/16-12 UN	1 3/16-12 UNF	41	46	79.0	60.5	15.0	634	**12RHZ5OMLOS**	420
22, 25	1	1 5/16-12 UN	1 7/16-12 UNF	46	50	82.5	64.0	19.0	863	**16RHZ5OMLOS**	420
28, 30, 32	1 1/4	1 5/8-12 UN	1 11/16-12 UNF	60	60	92.5	74.0	24.0	1397	**20RHZ5OMLOS**	250
35, 38	1 1/2	1 7/8-12 UN	2-12 UNF	65	70	99.5	81.0	29.0	2001	**24RHZ5OMLOS**	250

[1]) Pressure shown = item deliverable

$\frac{\text{PN (bar)}}{10}$ = PN (MPa)

Information on ordering complete fittings or alternative sealing materials see page I7.

*Please add the **suffixes** below according to the material/ surface required.

Order code suffixes			
Material	Suffix surface and material	Example	Standard sealing material (no additional suffix needed)
Steel, zinc plated, Cr(VI)-free	CF	4RHZ5OMLOSCF	NBR

Kovai

RHV82EDMLOS Non return valve

Male metric thread – ED-seal (ISO 9974) / O-Lok® ORFS end

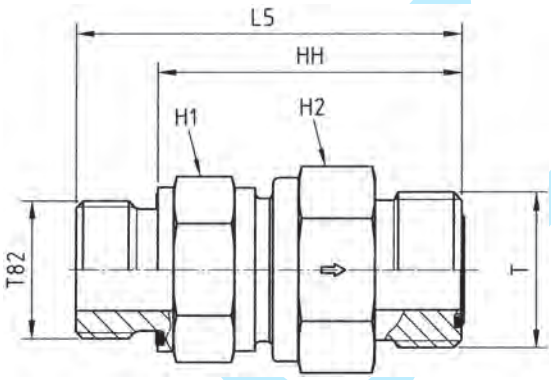

Tube O.D. mm	Tube O.D. Inch	metric thread T82	ORFS (UN/UNF) thread T	H1	H2	L5	HH	DN (Nom. diam.)	Weight g/1 piece	Order code*	PN (bar)[1] CF
6	1/4	M 12×1.5	9/16-18 UNF	19	19	48.5	36.5	3.5	89	**4M12RHV82EDMLOS**	420
8, 10	5/16, 3/8	M 16×1.5	11/16-16 UNF	22	24	56.5	44.5	5.5	157	**6M16RHV82EDMLOS**	420
12	1/2	M 18×1.5	13/16-16 UNF	24	27	61.5	49.5	7.5	195	**8M18RHV82EDMLOS**	420
14, 15, 16	5/8	M 22×1.5	1-14 UNF	32	36	72.0	58.0	11.5	369	**10M22RHV82EDMLOS**	420
18, 20	3/4	M 27×2.0	1 3/16-12 UNF	41	46	79.5	63.5	15.0	628	**12M27RHV82EDMLOS**	420
22, 25	1	M 33×2.0	1 7/16-12 UNF	46	50	84.0	66.0	19.0	867	**16M33RHV82EDMLOS**	420
28, 30, 32	1 1/4	M 42×2.0	1 11/16-12 UNF	60	60	95.0	75.0	24.0	1409	**20M42RHV82EDMLOS**	250
35, 38	1 1/2	M 48×2.0	2-12 UNF	65	70	103.0	81.0	29.0	1970	**24M48RHV82EDMLOS**	250

[1]) Pressure shown = item deliverable

$\frac{\text{PN (bar)}}{10}$ = PN (MPa)

Information on ordering complete fittings or alternative sealing materials see page I7.

*Please add the **suffixes** below according to the material/ surface required.

Order code suffixes			
Material	Suffix surface and material	Example	Standard sealing material (no additional suffix needed)
Steel, zinc plated, Cr(VI)-free	CF	4M12RHV82EDMLOSCF	NBR

RHZ82EDMLOS Non return valve

O-Lok® ORFS end / Male metric thread – ED-seal (ISO 9974)

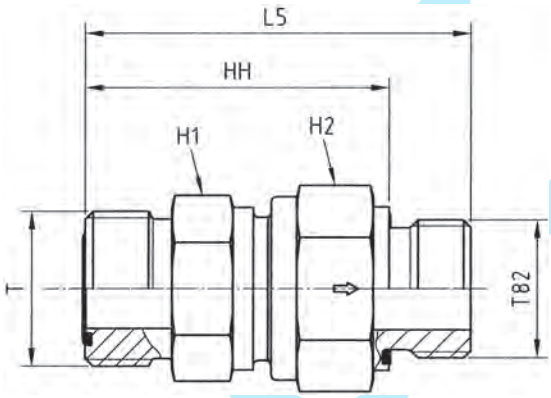

Tube O.D. mm	Tube O.D. Inch	metric thread T82	ORFS (UN/UNF) thread T	H1	H2	L5	HH	DN (Nom. diam.)	Weight g/1 piece	Order code*	PN (bar)[1] CF
6	1/4	M 12×1.5	9/16-18 UNF	19	19	48.5	36.5	3.5	89	**4M12RHZ82EDMLOS**	420
8, 10	5/16, 3/8	M 16×1.5	11/16-16 UNF	24	27	59.1	47.1	7.5	156	**6M16RHZ82EDMLOS**	420
12	1/2	M 18×1.5	13/16-16 UNF	24	27	61.5	49.5	7.5	195	**8M18RHZ82EDMLOS**	420
14, 15, 16	5/8	M 22×1.5	1-14 UNF	32	36	70.0	56.0	11.5	352	**10M22RHZ82EDMLOS**	420
18, 20	3/4	M 27×2.0	1 3/16-12 UNF	41	46	77.5	61.5	15.0	608	**12M27RHZ82EDMLOS**	420
22, 25	1	M 33×2.0	1 7/16-12 UNF	46	50	84.0	66.0	19.0	965	**16M33RHZ82EDMLOS**	420
28, 30, 32	1 1/4	M 42×2.0	1 11/16-12 UNF	60	60	95.0	75.0	24.0	1396	**20M42RHZ82EDMLOS**	250
35, 38	1 1/2	M 48×2.0	2-12 UNF	65	70	115.0	93.0	29.0	1978	**24M48RHZ82EDMLOS**	250

[1]) Pressure shown = item deliverable

$\frac{\text{PN (bar)}}{10}$ = PN (MPa)

Information on ordering complete fittings or alternative sealing materials see page I7.

*Please add the **suffixes** below according to the material/ surface required.

Order code suffixes			
Material	Suffix surface and material	Example	Standard sealing material (no additional suffix needed)
Steel, zinc plated, Cr(VI)-free	CF	4M12RHZ82EDMLOSCF	NBR

Kovai

RHDMTXS Non return valve

Triple-Lok® 37° flare end / Triple-Lok® 37° flare end

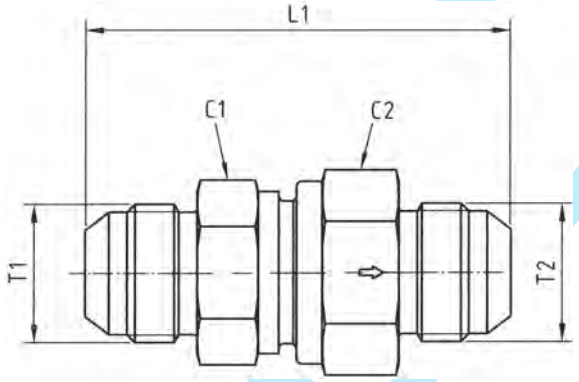

Tube 1 O.D. mm	Tube 1 O.D. Inch	Tube 2 O.D. mm	Tube 2 O.D. Inch	Thread JIC SAE T1	Thread JIC SAE T2	C1	C2	L1	DN (Nom. diam.)	Weight g/1 piece	Order code*	PN (bar)[1] CF
6	1/4	6	1/4	7/16-20 UNF	7/16-20 UNF	19	19	52.5	3.5	108	**4RHDMTXS**	420
8	5/16	8	5/16	1/2-20 UNF	1/2-20 UNF	22	24	59.5	5.5	188	**5RHDMTXS**	420
10	3/8	10	3/8	9/16-18 UNF	9/16-18 UNF	24	27	61.5	7.5	223	**6RHDMTXS**	420
12	1/2	12	1/2	3/4-16 UNF	3/4-16 UNF	27	32	69.5	9.5	324	**8RHDMTXS**	420
14, 15, 16	5/8	14, 15, 16	5/8	7/8-14 UNF	7/8-14 UNF	32	36	78.5	11.5	428	**10RHDMTXS**	350
18, 20	3/4	18, 20	3/4	1 1/16-12 UN	1 1/16-12 UN	41	46	87.5	15.0	731	**12RHDMTXS**	350
25	1	25	1	1 5/16-12 UN	1 5/16-12 UN	46	50	92.5	19.0	1076	**16RHDMTXS**	280
28, 30, 32	1 1/4	28, 30, 32	1 1/4	1 5/8-12 UN	1 5/8-12 UN	60	60	105.5	24.0	1630	**20RHDMTXS**	250
35, 38	1 1/2	35, 38	1 1/2	1 7/8-12 UN	1 7/8-12 UN	65	70	118.5	29.0	2362	**24RHDMTXS**	210

[1]) Pressure shown = item deliverable

$\frac{\text{PN (bar)}}{10}$ = PN (MPa)

Information on ordering complete fittings or alternative sealing materials see page I7.

*Please add the **suffixes** below according to the material/ surface required.

Order code suffixes			
Material	Suffix surface and material	Example	Standard sealing material (no additional suffix needed)
Steel, zinc plated, Cr(VI)-free	CF	4RHDMTXSCF	NBR

Kovaci

RHV42EDMXS Non return valve

Male BSPP thread – ED-seal (ISO 1179) / Triple-Lok® 37° flare end

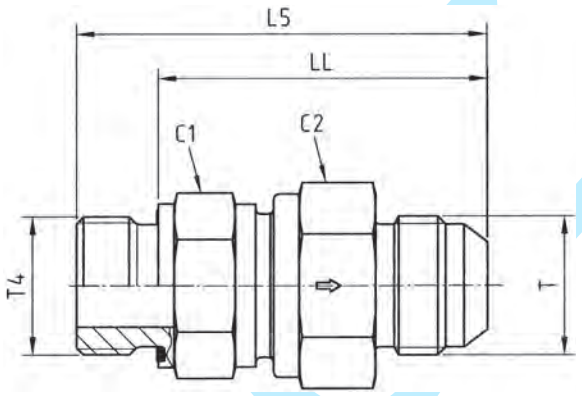

Tube O.D. mm	Tube O.D. Inch	BSPP thread T4	Thread JIC SAE T	C1	C2	L5	LL	DN (Nom. diam.)	Weight g/1 piece	Order code*	PN (bar)[1] CF
6	1/4	G 1/8	7/16-20 UNF	19	19	48.0	40.0	3.5	92	**4RHV42EDMXS**	420
8	5/16	G 1/4	1/2-20 UNF	22	24	59.5	47.5	5.5	165	**5-4RHV42EDMXS**	420
10	3/8	G 1/4	9/16-18 UNF	24	27	62.0	50.0	7.5	191	**6RHV42EDMXS**	420
12	1/2	G 3/8	3/4-16 UNF	27	32	67.0	55.0	9.5	277	**8RHV42EDMXS**	420
14, 15, 16	5/8	G 1/2	7/8-14 UNF	32	36	76.0	62.0	11.5	366	**10RHV42EDMXS**	350
18, 20	3/4	G 3/4	1 1/16-12 UN	41	46	84.5	68.5	15.0	631	**12RHV42EDMXS**	350
25	1	G 1	1 5/16-12 UN	46	50	89.5	71.5	19.0	863	**16RHV42EDMXS**	280
28, 30, 32	1 1/4	G 1 1/4	1 5/8-12 UN	60	60	102.0	82.0	24.0	1403	**20RHV42EDMXS**	250
35, 38	1 1/2	G 1 1/2	1 7/8-12 UN	65	70	113.0	91.0	29.0	1969	**24RHV42EDMXS**	210

[1]) Pressure shown = item deliverable

$\frac{\text{PN (bar)}}{10}$ = PN (MPa)

Information on ordering complete fittings or alternative sealing materials see page I7.

*Please add the **suffixes** below according to the material/ surface required.

Order code suffixes			
Material	Suffix surface and material	Example	Standard sealing material (no additional suffix needed)
Steel, zinc plated, Cr(VI)-free	CF	4RHV42EDMXSCF	NBR

RHZ42EDMXS Non return valve

Triple-Lok® 37° flare end / Male BSPP thread – ED-seal (ISO 1179)

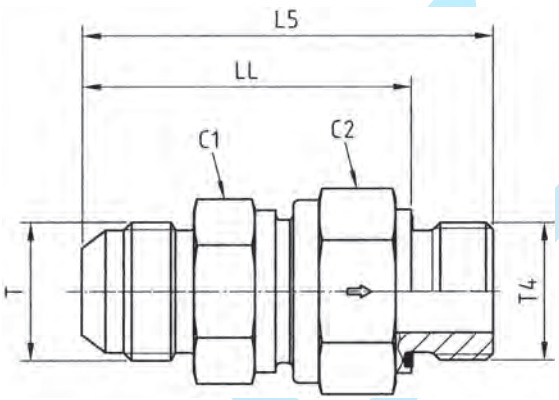

Tube O.D. mm	Tube O.D. Inch	BSPP thread T4	Thread JIC SAE T	C1	C2	L5	LL	DN (Nom. diam.)	Weight g/1 piece	Order code*	PN (bar)[1] CF
6	1/4	G 1/8	7/16-20 UNF	19	19	48.0	40.0	3.5	89	**4RHZ42EDMXS**	420
8	5/16	G 1/4	1/2-20 UNF	22	24	59.0	47.0	5.5	156	**5-4RHZ42EDMXS**	420
10	3/8	G 1/4	9/16-18 UNF	24	27	62.0	50.0	7.5	190	**6RHZ42EDMXS**	420
12	1/2	G 3/8	3/4-16 UNF	27	32	66.0	54.0	9.5	278	**8RHZ42EDMXS**	420
14, 15, 16	5/8	G 1/2	7/8-14 UNF	32	36	74.0	60.0	11.5	348	**10RHZ42EDMXS**	350
18, 20	3/4	G 3/4	1 1/16-12 UN	41	46	82.5	66.5	15.0	634	**12RHZ42EDMXS**	350
25	1	G 1	1 5/16-12 UN	46	50	89.5	71.5	19.0	863	**16RHZ42EDMXS**	280
28, 30, 32	1 1/4	G 1 1/4	1 5/8-12 UN	60	60	102.0	82.0	24.0	1397	**20RHZ42EDMXS**	250
35, 38	1 1/2	G 1 1/2	1 7/8-12 UN	65	70	115.0	93.0	29.0	2001	**24RHZ42EDMXS**	210

[1]) Pressure shown = item deliverable

$\frac{\text{PN (bar)}}{10}$ = PN (MPa)

Information on ordering complete fittings or alternative sealing materials see page I7.

*Please add the **suffixes** below according to the material/ surface required.

Order code suffixes			
Material	Suffix surface and material	Example	Standard sealing material (no additional suffix needed)
Steel, zinc plated, Cr(VI)-free	CF	4RHZ42EDMXSCF	NBR

RHV5OMXS Non return valve

Male UN/UNF thread – O-ring (ISO 11926) / Triple-Lok® 37° flare end

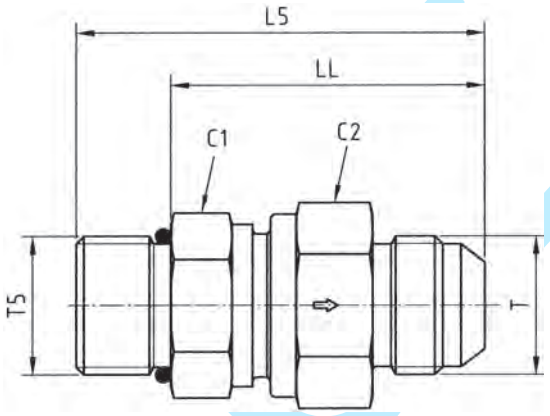

Tube O.D. mm	Tube O.D. Inch	Thread UNF T5	Thread JIC SAE T	C1	C2	L5	LL	DN (Nom. diam.)	Weight g/1 piece	Order code*	PN (bar)[1] CF
6	1/4	7/16-20 UNF	7/16-20 UNF	19	19	49.5	38.5	3.5	92	**4RHV5OMXS**	420
8	5/16	1/2-20 UNF	1/2-20 UNF	22	24	56.5	45.5	5.5	165	**5RHV5OMXS**	420
10	3/8	9/16-18 UNF	9/16-18 UNF	24	27	59.5	47.5	7.5	191	**6RHV5OMXS**	420
12	1/2	3/4-16 UNF	3/4-16 UNF	27	32	66.5	52.5	9.5	277	**8RHV5OMXS**	420
14, 15, 16	5/8	7/8-14 UNF	7/8-14 UNF	32	36	75.0	59.0	11.5	366	**10RHV5OMXS**	350
18, 20	3/4	1 1/16-12 UN	1 1/16-12 UN	41	46	84.0	65.5	15.0	631	**12RHV5OMXS**	350
25	1	1 5/16-12 UN	1 5/16-12 UN	46	50	88.0	69.5	19.0	863	**16RHV5OMXS**	280
28, 30, 32	1 1/4	1 5/8-12 UN	1 5/8-12 UN	60	60	99.5	81.0	24.0	1403	**20RHV5OMXS**	250
35, 38	1 1/2	1 7/8-12 UN	1 7/8-12 UN	65	70	109.5	91.0	29.0	1969	**24RHV5OMXS**	210

[1]) Pressure shown = item deliverable

$\frac{\text{PN (bar)}}{10}$ = PN (MPa)

Information on ordering complete fittings or alternative sealing materials see page I7.

*Please add the **suffixes** below according to the material/ surface required.

Order code suffixes			
Material	Suffix surface and material	Example	Standard sealing material (no additional suffix needed)
Steel, zinc plated, Cr(VI)-free	CF	RHV5OMXSCF	NBR

Kovaci

RHZ5OMXS Non return valve

Triple-Lok® 37° flare end / Male UN/UNF thread – O-ring (ISO 11926)

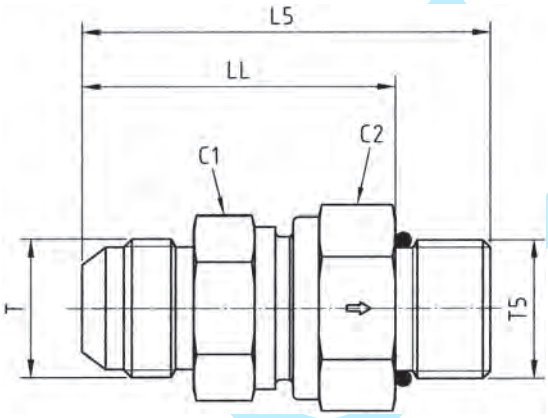

Tube O.D. mm	Tube O.D. Inch	Thread UNF T5	Thread JIC SAE T	C1	C2	L5	LL	DN (Nom. diam.)	Weight g/1 piece	Order code*	PN (bar)[1] CF
6	1/4	7/16-20 UNF	7/16-18 UNF	19	19	49.5	38.5	3.5	91	**4RHZ5OMXS**	420
8	5/16	1/2-20 UNF	1/2-20 UNF	22	24	56.5	45.5	5.5	161	**5RHZ5OMXS**	420
10	3/8	9/16-18 UNF	9/16-18 UNF	24	27	59.5	47.5	7.5	190	**6RHZ5OMXS**	420
12	1/2	3/4-16 UNF	3/4-16 UNF	27	32	66.5	52.5	9.5	278	**8RHZ5OMXS**	420
14, 15, 16	5/8	7/8-14 UNF	7/8-14 UNF	32	36	75.0	59.0	11.5	348	**10RHZ5OMXS**	350
18, 20	3/4	1 1/16-12 UN	1 1/16-12 UN	41	46	84.0	65.5	15.0	634	**12RHZ5OMXS**	350
25	1	1 5/16-12 UN	1 5/16-12 UN	46	50	88.0	69.5	19.0	863	**16RHZ5OMXS**	280
28, 30, 32	1 1/4	1 5/8-12 UN	1 5/8-12 UN	60	60	107.0	81.0	24.0	1397	**20RHZ5OMXS**	250
35, 38	1 1/2	1 7/8-12 UN	1 7/8-12 UN	65	70	109.5	91.0	29.0	2001	**24RHZ5OMXS**	210

[1]) Pressure shown = item deliverable

$\frac{\text{PN (bar)}}{10}$ = PN (MPa)

Information on ordering complete fittings or alternative sealing materials see page I7.

*Please add the **suffixes** below according to the material/ surface required.

Order code suffixes			
Material	Suffix surface and material	Example	Standard sealing material (no additional suffix needed)
Steel, zinc plated, Cr(VI)-free	CF	4RHZ5OMXSCF	NBR

Kovalent

RHV82EDMXS Non return valve

Male metric thread – ED-seal (ISO 9974) / Triple-Lok® 37° flare end

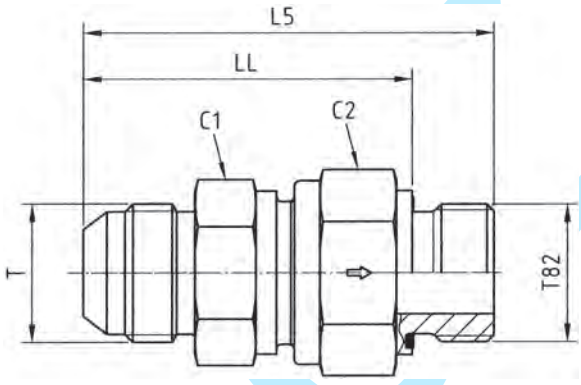

Tube O.D. mm	Tube O.D. Inch	Metric thread T82	Thread JIC SAE T	C1	C2	L5	LL	DN (Nom. diam.)	Weight g/1 piece	Order code*	PN (bar)[1] CF
6	1/4	M 10×1.0	7/16-20 UNF	19	19	48.0	40.0	3.5	89	**4M10RHV82EDMXS**	420
8	5/16	M 12×1.5	1/2-20 UNF	22	24	59.5	47.5	5.5	157	**5M12RHV82EDMXS**	420
10	3/8	M 14×1.5	9/16-18 UNF	24	27	62.0	50.0	7.5	195	**6M14RHV82EDMXS**	420
12	1/2	M 16×1.5	3/4-16 UNF	27	32	67.0	55.0	9.5	274	**8M16RHV82EDMXS**	420
14, 15, 16	5/8	M 18×1.5	7/8-14 UNF	32	36	73.5	61.5	11.5	369	**10M18RHV82EDMXS**	350
18, 20	3/4	M 27×2.0	1 1/16-12 UN	41	46	84.5	68.5	15.0	628	**12M27RHV82EDMXS**	350
25	1	M 33×2.0	1 5/16-12 UN	46	50	89.5	71.5	19.0	867	**16M33RHV82EDMXS**	280
28, 30, 32	1 1/4	M 42×2.0	1 5/8-12 UN	60	60	102.0	82.0	24.0	1409	**20M42RHV82EDMXS**	250
35, 38	1 1/2	M 48×2.0	1 7/8-12 UN	65	70	113.0	91.0	29.0	1970	**24M48RHV82EDMXS**	210

[1]) Pressure shown = item deliverable

$\frac{\text{PN (bar)}}{10}$ = PN (MPa)

Information on ordering complete fittings or alternative sealing materials see page I7.

*Please add the **suffixes** below according to the material/ surface required.

Order code suffixes			
Material	Suffix surface and material	Example	Standard sealing material (no additional suffix needed)
Steel, zinc plated, Cr(VI)-free	CF	4M10RHV82EDMXSCF	NBR

Kovalent

RHZ82EDMXS Non return valve

Triple-Lok® 37° flare end / Male metric thread – ED-seal (ISO 9974)

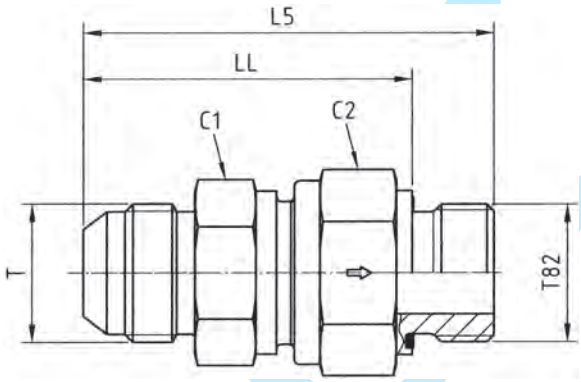

Tube O.D. mm	Tube O.D. Inch	Metric thread T82	Thread JIC SAE T	C1	C2	L5	LL	DN (Nom. diam.)	Weight g/1 piece	Order code*	PN (bar)[1] CF
6	1/4	M 10×1.0	7/16-20 UNF	19	19	48.0	40.0	3.5	89	**4M10RHZ82EDMXS**	420
8	5/16	M 12×1.5	1/2-20 UNF	22	24	59.5	47.5	5.5	156	**5M12RHZ82EDMXS**	420
10	3/8	M 14×1.5	9/16-18 UNF	24	27	62.0	50.0	7.5	195	**6M14RHZ82EDMXS**	420
12	1/2	M 16×1.5	3/4-16 UNF	27	32	66.0	54.0	9.5	272	**8M16RHZ82EDMXS**	420
14, 15, 16	5/8	M 18×1.5	7/8-14 UNF	32	36	71.5	59.5	11.5	352	**10M18RHZ82EDMXS**	350
18, 20	3/4	M 27×2.0	1 1/16-12 UN	41	46	82.5	66.5	15.0	608	**12M27RHZ82EDMXS**	350
25	1	M 33×2.0	1 5/16-12 UN	46	50	89.5	71.5	19.0	965	**16M33RHZ82EDMXS**	280
28, 30, 32	1 1/4	M 42×2.0	1 5/8-12 UN	60	60	102.0	82.0	24.0	1396	**20M42RHZ82EDMXS**	250
35, 38	1 1/2	M 48×2.0	1 7/8-12 UN	65	70	115.0	93.0	29.0	1807	**24M48RHZ82EDMXS**	210

[1]) Pressure shown = item deliverable

$\frac{\text{PN (bar)}}{10}$ = PN (MPa)

Information on ordering complete fittings or alternative sealing materials see page I7.

*Please add the **suffixes** below according to the material/ surface required.

Order code suffixes			
Material	Suffix surface and material	Example	Standard sealing material (no additional suffix needed)
Steel, zinc plated, Cr(VI)-free	CF	4M10RHZ82EDMXSCF	NBR

Kovalent

Technical data ball valves

Leakage rate
0 drops/bubbles per min. (DIN EN 12266 and ISO 5208)

The pressure ratings PN for ball- and shut off- valves include design factor 1.5 for the body and 1.1 for the ball seat (according DIN EN 12266 and ISO 5208).

Steel Ball Valves

Materials:
Body: Steel, Cr(VI)-free plated
Ball: Hardchrome plated carbon steel
Stem: Steel, Cr(VI)-free plated

Seals:
Ball seat: POM
Stem seal: NBR
According to application, different seal combinations are available.

Temperature range:*
–10 up to +100 °C.

Stainless Steel Ball Valves

Materials:
Body: Stainless steel
Ball: Stainless steel
Connectors: Stainless steel

Seals:
Ball seat: POM
Stem seal: NBR
According to application, different seal combinations are available.

Temperature range:
–30 up to +100°C.

(Caution: reduced pressure ratings, see pages P37ff).

Applications:
Suitable for petroleum based hydraulic fluid, lubricants and fuel oil.
Different media and applications on request*

Caution!
Please note the admissible pressure ratings for the tube connection. Ball valves are not suitable for use as flow restriction.

Certifications and approvals

On demand

3.1 Material certificate (DIN EN 10204)
3.1 Pressure test (DIN EN 10204)
3.2 Certificate (DIN EN 10204)
DNV/GL
ABS
BV
Other certificates on request

Additional components and custom designs

on request

Locking devices (P51)
Levers
Actuators
Limit switches
Ball valves for gas applications
Ball valve combinations
High pressure/High temperature ball valves
Fire safe/ATEX
Custom made special blocks

***Remarks:**
For clarification of the suitability of the ball valves for differnt media and applications please provide the following data: system pressure, medium, temperature, possible pressure peaks (including pressure and frequency) and possible operation with full differential pressure.

kovaz.cz

Material properties

Material of body, connections, ball and stem

	Pressure reduction in % in relation to permitted system temperature in °C													
	-60°	-50°	-40°	-30°	-20°	-10°	0°	+20°	+80°	+100°	+120°	+130°	+150°	+200°
Steel					0%									
Low alloy steel	25%					0%								
Stainless steel	0%									11%				
Duplex			0%							20%				

Sealing material ball seat

	Pressure reduction in % in relation to permitted system temperature in °C													
	-60°	-50°	-40°	-30°	-20°	-10°	0°	+20°	+80°	+100°	+120°	+130°	+150°	+200°
POM			0%											
PEEK natural (unfilled)	see separate table on page P38													
PEEK (graphite filled)				see separate table on page P38										
PTFE	see separate table on page P38													

Sealing material stem and adapter

	Pressure reduction in % in relation to permitted system temperature in °C													
	-60°	-50°	-40°	-30°	-20°	-10°	0°	+20°	+80°	+100°	+120°	+130°	+150°	+200°
NBR				0%										
FKM					0%									
EPDM		0%												
PTFE	see separate table on page P38													

permitted system temperature

system temperature not permitted

P

Example

KH18LPEEK/FKM71X	Application temperature: max. 180 °C	Formula:
PN = 420 bar		Pmax(180°C) = 95bar
Body: 1.4571	Pressure reduction body: 11%	
Ball Seat: PEEK (graphite filled)	Pressure ball seat: 95 bar	
O-ring: FKM	Pressure reduction O-ring: 0%	

PEEK/PTFE Pressure / Temperature Diagram

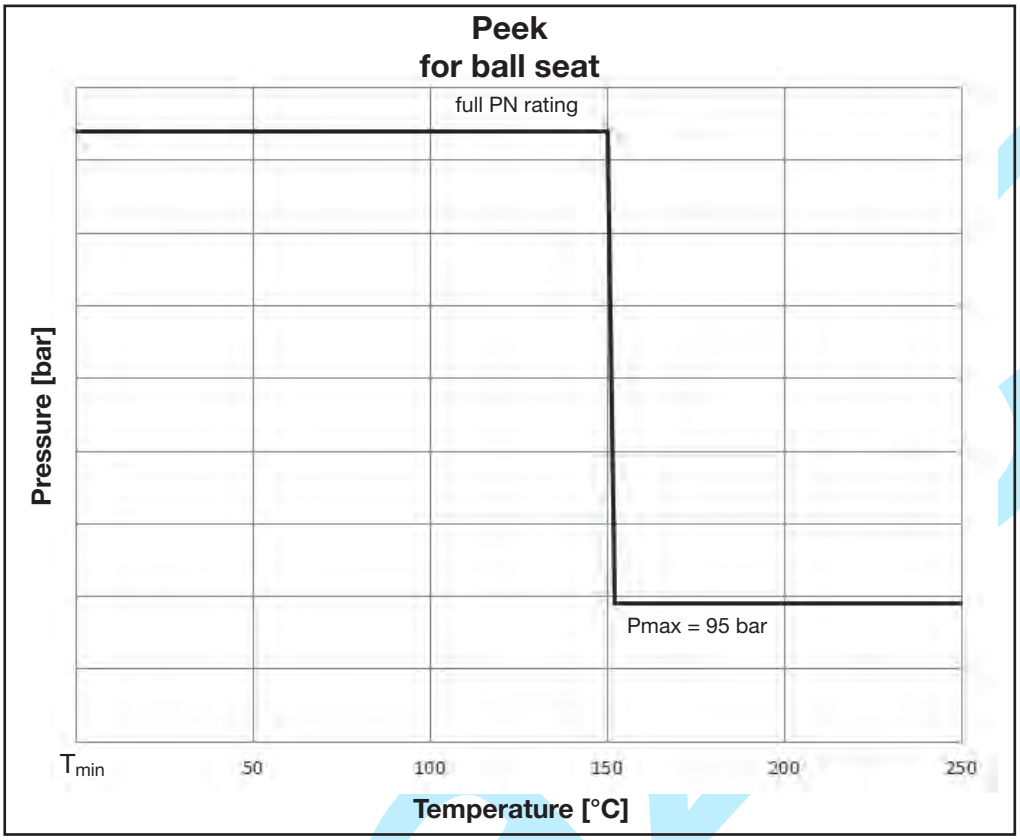

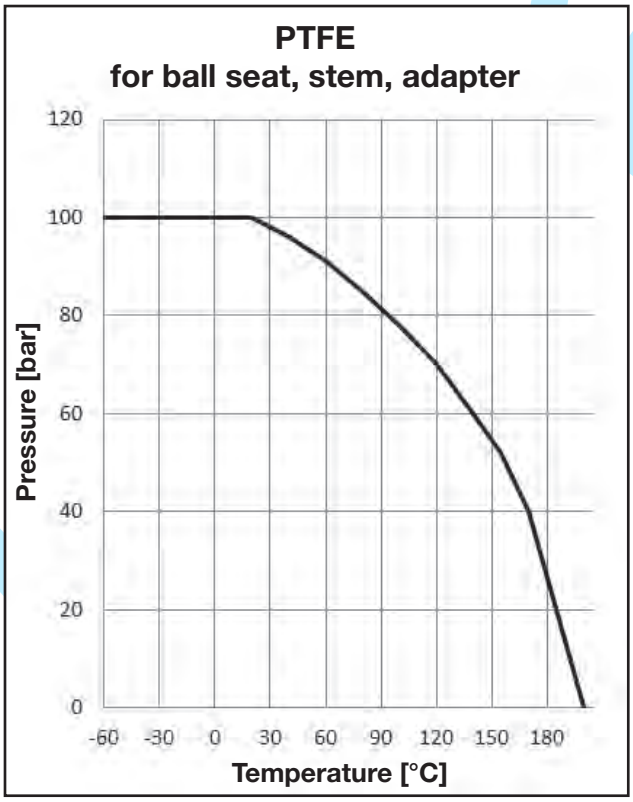

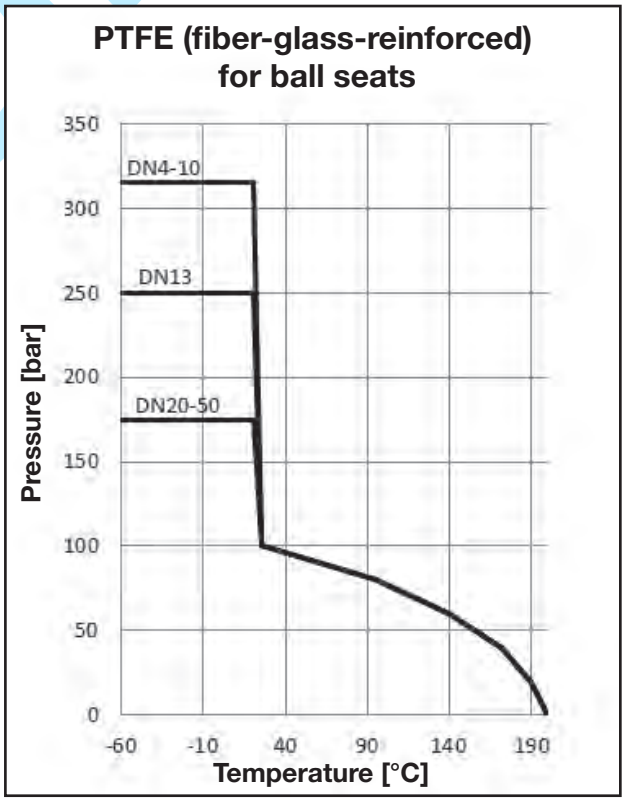

kovaz.cz

KH 2-way ball valve steel

EO 24° cone end

DN 4-25

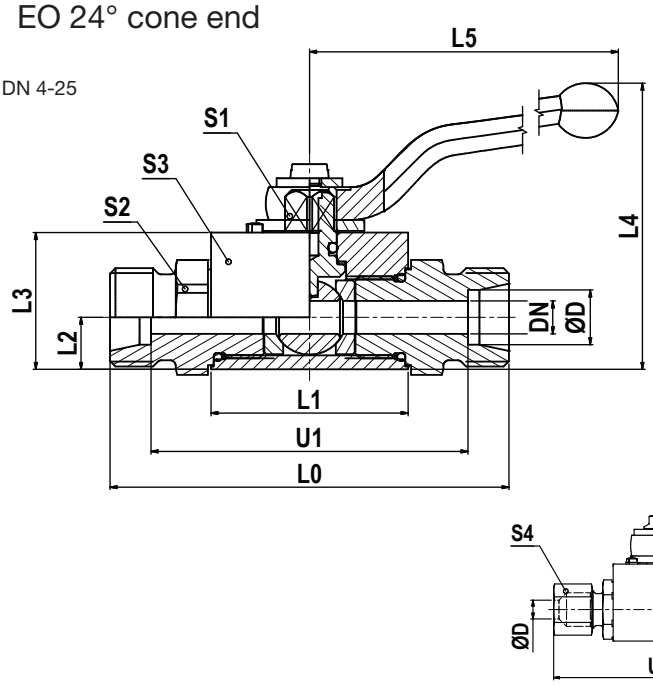

DN 32-50

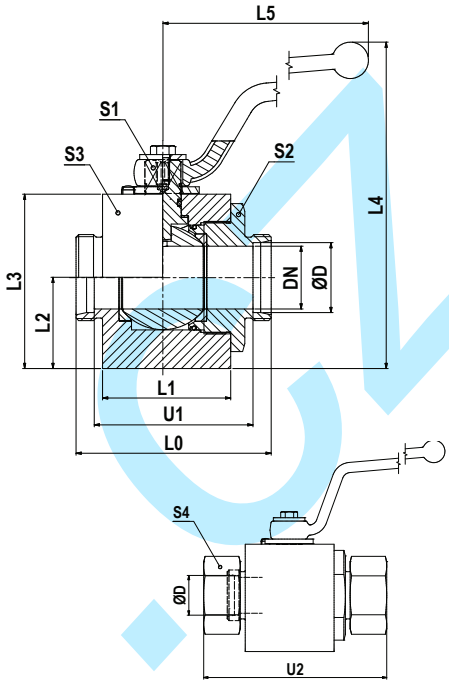

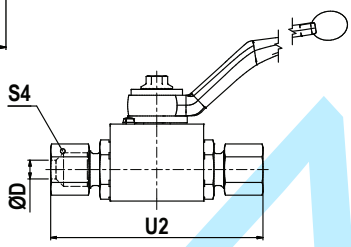

Series	D	DN	L0	L1	L2	L3	L4	L5	U1	U2	S1	S2	S3	S4	Weight g/1 piece	Order code	PN (bar)
L[1])	06	4	67	36.0	9.5	25	54.5	76	53	82	7	19	20	14	195	**KH06LCFX**	500
	08	6	67	36.0	9.5	25	54.5	76	53	82	7	19	20	17	190	**KH08LCFX**	500
	10	8	75	45.0	14.5	35	67.5	100	61	90	8	24	30	19	420	**KH10LCFX**	500
	12	10	75	45.0	14.5	35	67.5	100	61	90	8	24	30	22	410	**KH12LCFX**	500
	15	13	83	51.0	17.0	40	93.0	113	69	99	10	30	35	27	631	**KH15LCFX**	500
	18	16	82	50.0	20.0	45	98.0	113	67	99	10	36	45	32	850	**KH18LCFX**	420
	22	20	99	60.0	24.0	55	120.0	171	84	116	14	41	45	36	1210	**KH22LCFX**	420
	28	25	108	70.0	26.0	60	125.0	171	93	126	14	50	55	41	1750	**KH28LCFX**	420
	35	32/25	116	70.0	26.0	60	125.0	171	95	138	14	50	55	50	1820	**KH35LDN25CFX**	420
	35	32	121	79.0	49.5	95	188.0	228	100	143	17	60	Ø99	50	4888	**KH35LCFX**	420
	42	40/25	121	70.0	26.0	60	125.0	171	99	144	14	55	55	60	1940	**KH42LDN25CFX**	420
	42	40	118	77.5	54.5	105	198.0	228	96	141	17	75	Ø109	60	5590	**KH42LCFX**	420
S[2])	08	5	73	36.0	9.5	25	54.5	76	59	88	7	19	20	19	214	**KH08SCFX**	500
	10	6	73	36.0	9.5	25	54.5	76	58	90	7	19	20	22	220	**KH10SCFX**	500
	12	8	77	45.0	14.5	35	67.5	100	62	94	8	24	30	24	430	**KH12SCFX**	500
	14	10	81	45.0	14.5	35	67.5	100	65	100	8	24	30	27	440	**KH14SCFX**	500
	16	13	87	51.0	17.0	40	93.0	113	70	106	10	30	35	30	649	**KH16SCFX**	500
	20	16	90	50.0	20.0	45	98.0	113	69	112	10	36	45	36	900	**KH20SCFX**	420
	25	20	107	60.0	24.0	55	120.0	171	83	131	14	41	45	46	1290	**KH25SCFX**	420
	30	25	120	70.0	26.0	60	125.0	171	93	146	14	50	55	50	1880	**KH30SCFX**	420
	38	32/25	134	70.0	26.0	60	125.0	171	102	163	14	55	55	60	1950	**KH38SDN25CFX**	420
	38	32	127	73.0	49.5	95	188.0	228	95	156	17	60	Ø99	60	4740	**KH38SCFX**	420

[1]) L = light series; [2]) S = heavy series

$\frac{\text{PN (bar)}}{10}$ = PN (MPa)

Delivery without nut and ring.

Order code suffixes			
Material	Suffix surface and material	Example	Standard sealing material (no additional suffix needed)
Steel, zinc plated, Cr(VI)-free	CF	KH06LCFX	POM / NBR

KH 2-way ball valve stainless steel

EO 24° cone end

DN 4-25

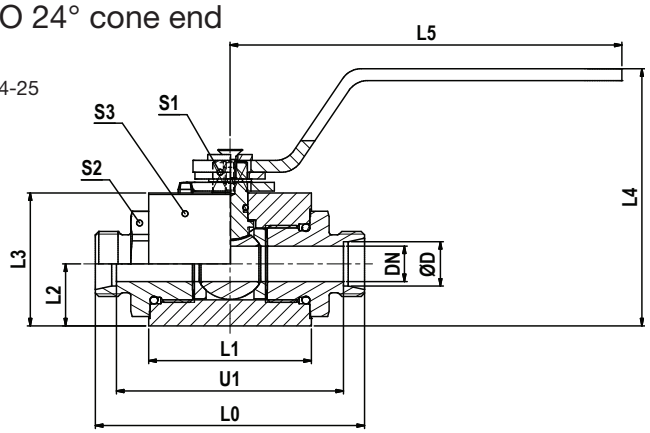

DN 32-50

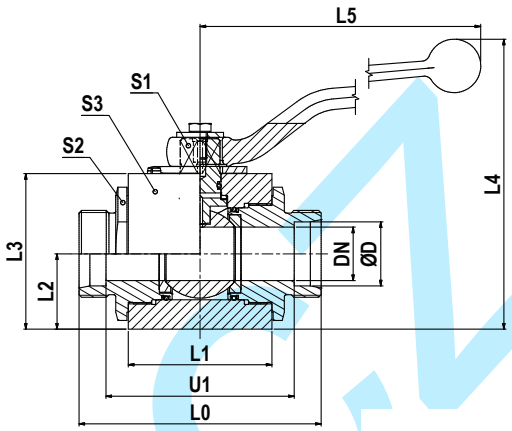

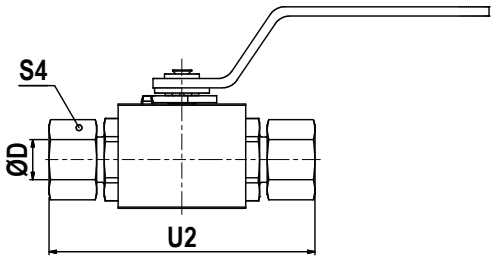

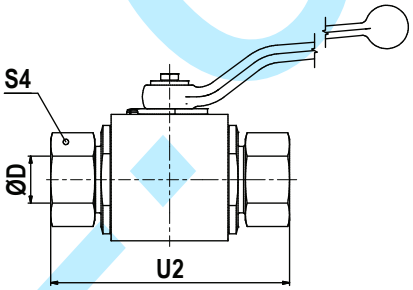

Series	D	DN	L0	L1	L2	L3	L4	L5	U1	U2	S1	S2	S3	S4	Weight g/1 piece	Order code	PN (bar)
L[1])	06	4	73	41.5	13.5	30.0	54	80.0	58.5	88	7	22	30	14	391	**KH06L71X**	500
	08	6	73	41.5	13.5	30.0	54	80.0	58.5	88	7	22	30	17	392	**KH08L71X**	500
	10	8	87	53.0	18.0	40.0	82	132.5	73.0	102	8	30	40	19	833	**KH10L71X**	500
	12	10	87	53.0	18.0	40.0	82	132.5	73.0	102	8	30	40	22	812	**KH12L71X**	500
	15	12	91	55.0	21.0	45.0	87	132.5	76.5	107	10	32	45	27	1018	**KH15L71X**	500
	18	12	91	55.0	21.0	45.0	87	132.5	75.5	108	10	32	45	32	1059	**KH18L71X**	500
	22	20	105	65.0	31.0	65.0	118	190.0	89.5	122	14	46	65	36	2427	**KH22L71X**	400
	28	25	112	71.0	38.0	75.0	128	190.0	96.5	130	14	50	75	41	3313	**KH28L71X**	400
	35	32	145	86.0	45.0	93.0	174	320.0	123.5	167	19	70	Ø100	50	6230	**KH35L71X**	400
	42	40	150	92.0	52.0	104.5	185	320.0	127.5	173	19	80	Ø110	60	7706	**KH42L71X**	400
S[2])	08	4	76	41.5	13.5	30.0	54	80.0	61.5	91	7	22	30	19	390	**KH08S71X**	500
	10	6	76	41.5	13.5	30.0	54	80.0	60.5	91	7	22	30	22	406	**KH10S71X**	500
	12	8	89	53.0	18.0	40.0	82	132.5	74.0	106	8	30	40	24	855	**KH12S71X**	500
	14	10	93	53.0	18.0	40.0	82	132.5	77.0	112	8	30	40	27	850	**KH14S71X**	500
	16	12	96	55.0	21.0	45.0	87	132.5	78.5	115	10	32	45	30	1050	**KH16S71X**	500
	20	12	99	55.0	21.0	45.0	87	132.5	77.5	121	10	32	45	36	1090	**KH20S71X**	500
	25	20	113	65.0	31.0	65.0	118	190.0	88.5	137	14	46	65	46	2490	**KH25S71X**	400
	30	25	124	71.0	38.0	75.0	128	190.0	96.5	150	14	50	75	50	3430	**KH30S71X**	400
	38	32	145	86.0	45.0	93.0	174	320.0	112.5	174	19	70	Ø100	60	5881	**KH38S71X**	400

[1]) L = light series; [2]) S = heavy series

$\frac{\text{PN (bar)}}{10}$ = PN (MPa)

Delivery without nut and ring.

Order code suffixes			
Material	Suffix surface and material	Example	Standard sealing material (no additional suffix needed)
Stainless Steel	71	KH06L71X	POM / NBR

P

KH 2-way BSPP ball valve steel

Female BSPP thread (ISO 1179-1)

DN 4-25

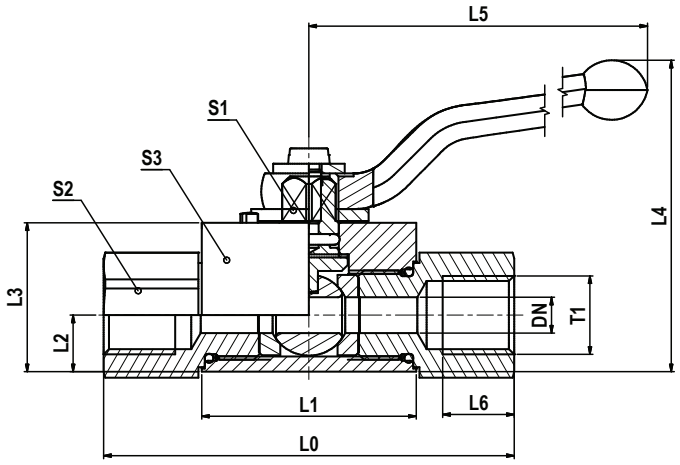

DN 32-50

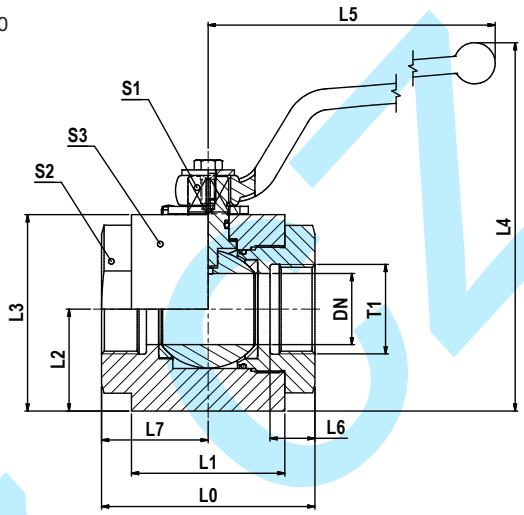

T1	DN	L0	L1	L2	L3	L4	L5	L6	L7	S1	S2	S3	Weight g/1 piece	Order code	PN (bar)
G 1/8	5	69	36	9.5	25	54.5	76	12	–	7	19	20	220	**KH1/8CFX**	500
G 1/4	6	69	36	9.5	25	54.5	76	12	–	7	19	20	210	**KH1/4CFX**	500
G 3/8	10	73	45	14.5	35	67.5	100	14	–	8	24	30	430	**KH3/8CFX**	500
G 1/2	13	82	51	17.0	40	93.0	113	15	–	10	30	35	670	**KH1/2CFX**	500
G 5/8	16	88	50	20.0	45	98.0	113	18	–	10	36	45	973	**KH5/8CFX**	420
G 3/4	20	93	60	24.0	55	120.0	171	18	–	14	41	45	1280	**KH3/4CFX**	420
G 1	25	115	70	26.0	60	125.0	171	20	–	14	50	55	1982	**KH1CFX**	420
G 1 1/4	32	110	80	49.5	95	188.0	228	22	55	17	60	Ø99	4888	**KH11/4CFX**	420
G 1 1/4	32/25	134	70	26.0	60	125.0	171	22	–	14	50	55	2066	**KH11/4DN25CFX**	420
G 1 1/2	40	114	82	54.5	105	198.0	228	24	57	17	75	Ø109	6330	**KH11/2CFX**	420
G 1 1/2	40/25	139	70	26.0	60	125.0	171	24	–	14	55	55	2200	**KH11/2DN25CFX**	420
G 2	50	133	100	62.0	120	212.0	306	26	65	17	85	Ø124	9220	**KH2CFX**	420

$\frac{\text{PN (bar)}}{10}$ = PN (MPa)

Order code suffixes			
Material	Suffix surface and material	Example	Standard sealing material (no additional suffix needed)
Steel, zinc plated, Cr(VI)-free	CF	KH1/8CFX	POM / NBR

KH 2-way BSPP ball valve stainless steel

Female BSPP thread (ISO 1179-1)

DN 4-25

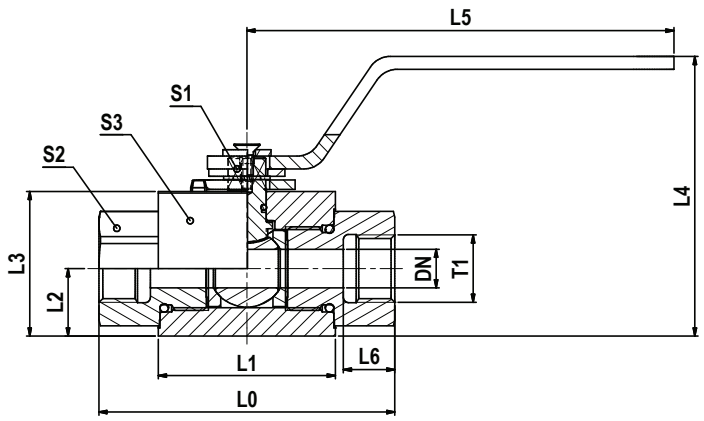

DN 32-50

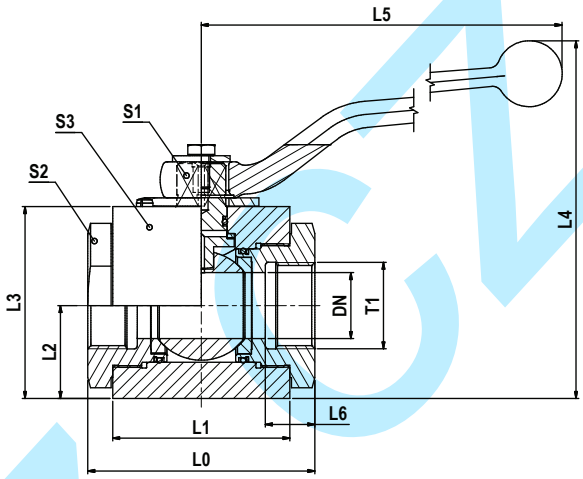

T1	DN	L0	L1	L2	L3	L4	L5	L6	S1	S2	S3	Weight g/1 piece	Order code	PN (bar)
G 1/8	4	69	41.5	13.5	30.0	54	80.0	11.0	7	22	30	420	**KH1/871X**	500
G 1/4	6	75	41.5	13.5	30.0	54	80.0	14.0	7	22	30	427	**KH1/471X**	500
G 3/8	10	86	53.0	18.0	40.0	82	132.5	14.0	8	30	40	902	**KH3/871X**	500
G 1/2	12	92	55.0	21.0	45.0	87	132.5	16.0	10	32	45	1100	**KH1/271X**	500
G 3/4	20	111	65.0	31.0	65.0	118	190.0	18.0	14	46	65	2699	**KH3/471X**	400
G 1	25	122	71.0	38.0	75.0	128	190.0	20.0	14	50	75	3620	**KH171X**	400
G 1 1/4	32	110	86.0	45.0	93.0	174	320.0	24.0	19	70	Ø100	5688	**KH11/471X**	400
G 1 1/2	40	120	92.0	52.0	104.5	185	320.0	26.0	19	80	Ø110	7379	**KH11/271X**	400
G 2	50	140	97.0	59.5	119.5	201	320.0	27.5	19	95	Ø125	10086	**KH271X**	400

$\frac{\text{PN (bar)}}{10}$ = PN (MPa)

Order code suffixes			
Material	Suffix surface and material	Example	Standard sealing material (no additional suffix needed)
Stainless Steel	71	KH1/871X	POM / NBR

kovoz.cz

KH 2-way NPT ball valve steel

Female NPT thread (SAE 476)

DN 4-25

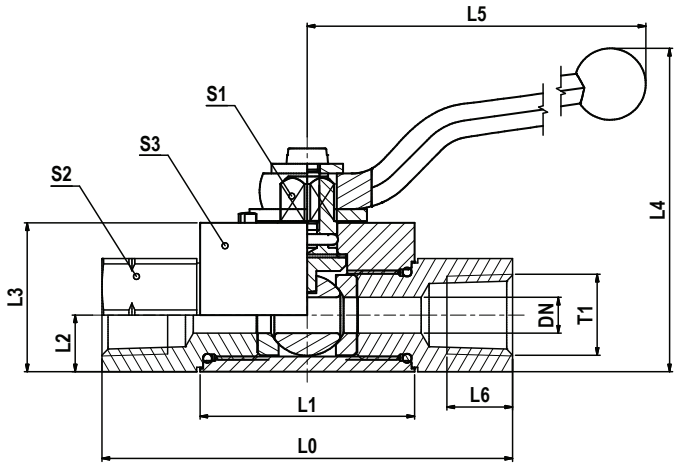

DN 32-50

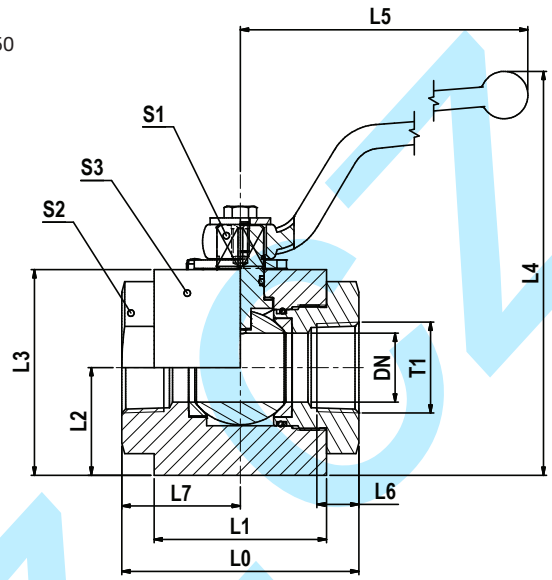

T1	DN	L0	L1	L2	L3	L4	L5	L6	L7	S1	S2	S3	Weight g/1 piece	Order code	PN (bar)
1/8-27 NPT	5	69	36	9.5	25	55	76	7.0	–	7	19	20	225	**KH1/8NPTCFX**	500
1/4-18 NPT	6	69	36	9.5	25	55	76	11.0	–	7	19	20	210	**KH1/4NPTCFX**	500
3/8-18 NPT	10	73	45	14.5	35	68	100	11.5	–	8	24	30	430	**KH3/8NPTCFX**	500
1/2-14 NPT	13	82	51	17.0	40	93	113	15.0	–	10	30	35	670	**KH1/2NPTCFX**	500
3/4-14 NPT	20	93	60	24.0	55	120	171	16.0	–	14	41	45	1300	**KH3/4NPTCFX**	420
1-11.5 NPT	25	115	70	26.0	60	125	171	19.0	–	14	50	55	2000	**KH1NPTCFX**	420
1 1/4-11.5 NPT	32	110	80	49.5	95	188	228	19.5	55	17	60	Ø99	4888	**KH11/4NPTCFX**	420
1 1/2-11.5 NPT	40	114	82	54.5	105	198	228	19.5	57	17	75	Ø109	5590	**KH11/2NPTCFX**	420
2-11.5 NPT	50	133	100	62.0	120	212	306	22.0	65	17	85	Ø124	9220	**KH2NPTCFX**	420

$\frac{\text{PN (bar)}}{10}$ = PN (MPa)

Order code suffixes			
Material	Suffix surface and material	Example	Standard sealing material (no additional suffix needed)
Steel, zinc plated, Cr(VI)-free	CF	KH1/8NPTCFX	POM / NBR

Kovoz.cz

KH 2-way NPT ball valve stainless steel

Female NPT thread (SAE 476)

DN 4-25

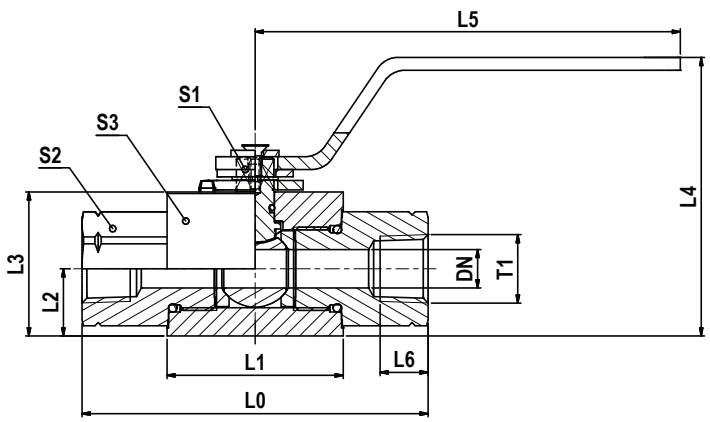

DN 32-50

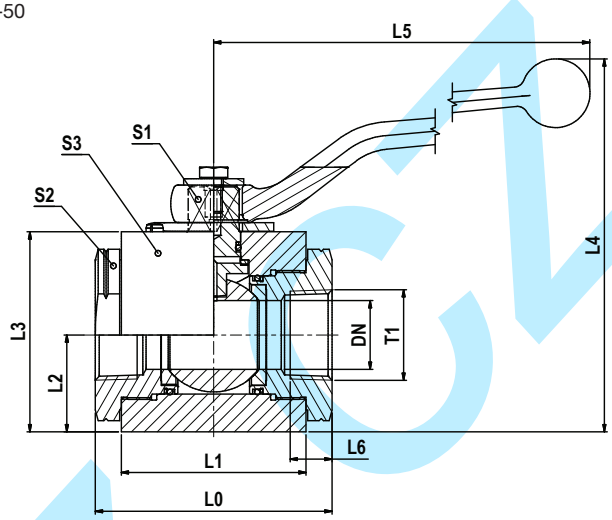

T1	DN	L0	L1	L2	L3	L4	L5	L6	S1	S2	S3	Weight g/1 piece	Order code	PN (bar)
1/8-27 NPT	4	82	41.5	13.5	30.0	54	80.0	8.0	7	22	30	431	**KH1/8NPT71X**	500
1/4-18 NPT	6	82	41.5	13.5	30.0	54	80.0	11.5	7	22	30	436	**KH1/4NPT71X**	500
3/8-18 NPT	10	95	53.0	18.0	40.0	82	132.5	11.5	8	30	40	956	**KH3/8NPT71X**	500
1/2-14 NPT	12	108	55.0	21.0	45.0	87	132.5	15.0	10	32	45	1204	**KH1/2NPT71X**	500
3/4-14 NPT	20	111	65.0	31.0	65.0	118	190.0	16.0	14	46	65	2723	**KH3/4NPT71X**	400
1-11.5 NPT	25	122	71.0	38.0	75.0	128	190.0	19.0	14	50	75	3646	**KH1NPT71X**	400
1 1/4-11.5 NPT	32	110	86.0	45.0	93.0	174	320.0	19.5	19	70	Ø100	5887	**KH11/4NPT71X**	400
1 1/2-11.5 NPT	40	120	92.0	52.0	104.5	185	320.0	19.5	19	80	Ø110	7430	**KH11/2NPT71X**	400
2-11.5 NPT	50	140	97.0	59.5	119.5	201	320.0	25.0	19	95	Ø125	10100	**KH2NPT71X**	400

$\frac{\text{PN (bar)}}{10}$ = PN (MPa)

Order code suffixes			
Material	Suffix surface and material	Example	Standard sealing material (no additional suffix needed)
Stainless steel	71	KH1/8NPT71X	POM / NBR

Kovoz.cz

KH 3-way compact ball valve steel

EO 24° cone end

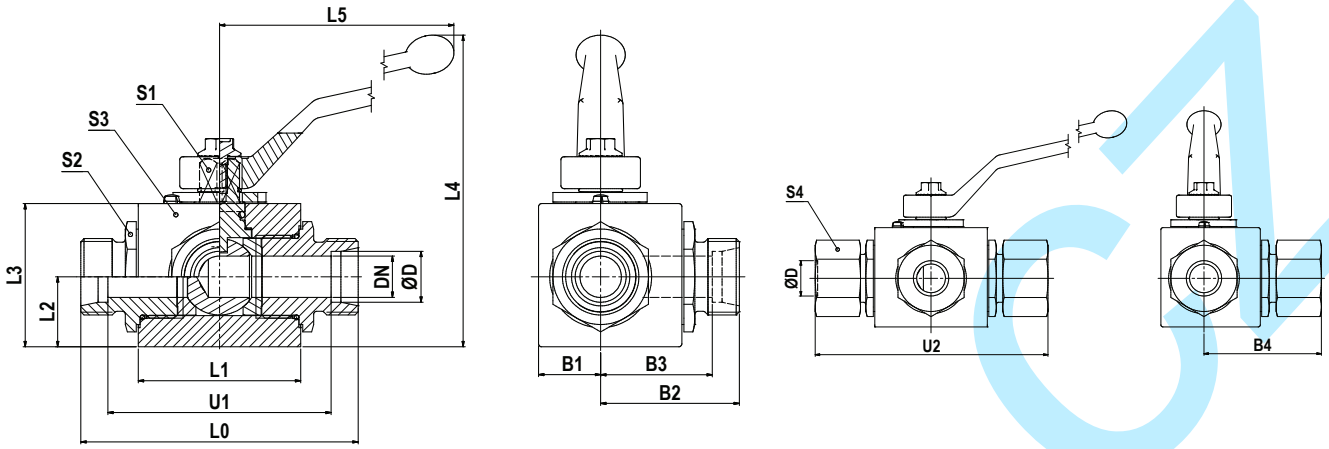

By default 3-way ball valves are manufactured as L-Bore version. Alternative design on request. Pressure inlet only from center port (connector 2).

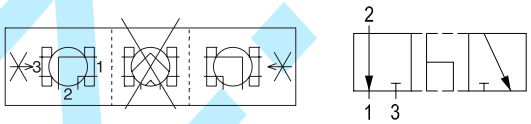

Series	D	DN	L0	L1	L2	L3	L4	L5	U1	U2	B1	B2	B3	B4	S1	S2	S3	S4	Weight g/1 piece	Order code	PN (bar)
L[1)]	06	4	67	36	14.5	30	59.5	76	53	82	12.0	33.5	26.5	41.0	7	19	30	14	320	**KH3/2-06LCFX**	500
	08	6	67	36	14.5	30	59.5	76	53	82	12.0	33.5	26.5	41.0	7	19	30	17	320	**KH3/2-08LCFX**	500
	10	8	75	45	14.5	35	67.5	100	61	90	17.5	37.5	30.5	45.0	8	24	40	19	550	**KH3/2-10LCFX**	500
	12	10	75	45	14.5	35	67.5	100	61	90	17.5	37.5	30.5	45.0	8	24	40	22	550	**KH3/2-12LCFX**	500
	15	13	83	51	22.0	45	98.0	113	69	99	19.5	41.5	34.5	49.5	10	30	45	27	890	**KH3/2-15LCFX**	500
	18	16	82	50	25.0	50	103.0	113	67	99	25.0	41.0	33.5	49.5	10	36	50	32	1050	**KH3/2-18LCFX**	400
	22	20	99	60	29.0	60	125.0	171	84	116	23.5	51.0	43.5	58.0	14	41	55	36	1610	**KH3/2-22LCFX**	400
	28	25	108	70	31.0	65	130.0	171	93	126	30.0	54.0	46.5	63.0	14	50	65	41	2270	**KH3/2-28LCFX**	400
	35	32/25	116	70	31.0	65	130.0	171	95	138	30.0	58.0	47.5	69.5	14	50	65	50	2480	**KH3/2-35LDN25CFX**	400
	42	40/25	121	70	31.0	65	130.0	171	99	144	30.0	60.5	49.5	71.5	14	55	65	60	2600	**KH3/2-42LDN25CFX**	400
S[2)]	08	5	73	36	14.5	30	54.5	76	59	88	12.0	36.5	29.5	44.0	7	19	30	19	350	**KH3/2-08SCFX**	500
	10	6	73	36	14.5	30	54.5	76	58	90	12.0	36.5	29.0	45.0	7	19	30	22	350	**KH3/2-10SCFX**	500
	12	8	77	45	14.5	35	67.5	100	62	94	17.5	38.5	31.0	47.0	8	24	40	24	570	**KH3/2-12SCFX**	500
	14	10	81	45	14.5	35	67.5	100	65	100	17.5	40.5	32.5	50.0	8	24	40	27	570	**KH3/2-14SCFX**	500
	16	13	87	51	22.0	45	98.0	113	70	106	19.5	43.5	35.0	53.0	10	30	45	30	910	**KH3/2-16SCFX**	500
	20	16	90	50	25.0	50	103.0	113	69	112	25.0	45.0	34.5	56.0	10	36	50	36	1120	**KH3/2-20SCFX**	400
	25	20	107	60	29.0	60	125.0	171	83	131	23.5	55.0	43.0	65.5	14	41	55	46	1720	**KH3/2-25SCFX**	400
	30	25	120	70	31.0	65	130.0	171	93	146	30.0	60.0	46.5	73.0	14	50	65	50	2440	**KH3/2-30SCFX**	400
	38	32/25	134	70	31.0	65	130.0	171	102	163	30.0	67.0	51.0	81.5	14	55	65	60	2950	**KH3/2-38SDN25CFX**	400

[1)] L = light series; [2)] S = heavy series

$\frac{\text{PN (bar)}}{10}$ = PN (MPa)

Delivery without nut and ring.

Order code suffixes			
Material	Suffix surface and material	Example	Standard sealing material (no additional suffix needed)
Steel, zinc plated, Cr(VI)-free	CF	KH3/2-06LCFX	POM / NBR

KH 3-way compact ball valve stainless steel

EO 24° cone end

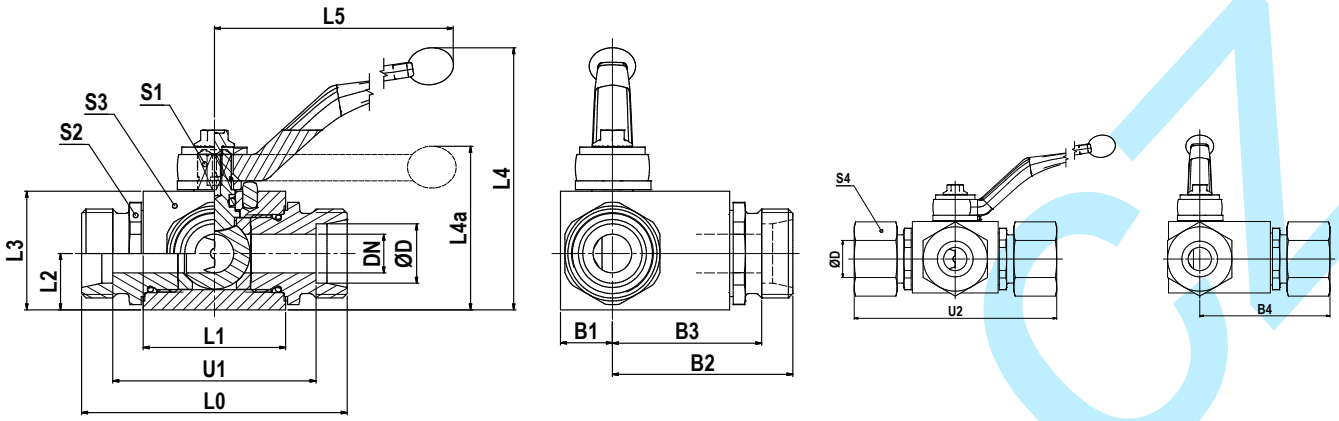

By default 3-way ball valves are manufactured as L-Bore version. Alternative design on request. Pressure inlet only from center port (connector 2).

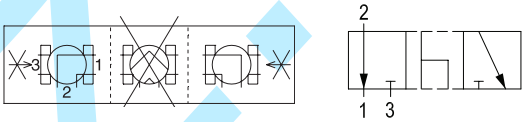

Series	D	DN	L0	L1	L2	L3	L4	L4a	L5	U1	B1	B2	B3	B4	S1	S2	S3	S4	Weight g/1 piece	Order code	PN (bar)
L[1])	06	4	67	40	13.5	33	82		115	53	13.0	50.0	43.0	57.5	9	22	47.5	14	500	**KH3/2-06L71X**	500
	08	6	67	40	13.5	33	82		115	53	13.0	51.5	44.5	59.5	9	22	47.5	17	520	**KH3/2-08L71X**	500
	10	8	74	40	13.5	33	82		115	60	13.0	52.5	45.5	60.5	9	22	47.5	19	540	**KH3/2-10L71X**	500
	12	10	74	43	17.5	38	86		115	60	16.0	55.5	48.5	63.0	9	27	52.0	22	730	**KH3/2-12L71X**	500
	15	13	82	48	19.0	40	89		115	68	17.5	60.5	53.5	68.5	9	30	57.0	27	850	**KH3/2-15L71X**	500
	18	16	82	48	19.0	40	89		115	67	17.5	61.5	54.0	70.5	9	30	57.0	32	890	**KH3/2-18L71X**	500
	22	20	101	62	24.5	57		79	200	86	24.5	71.5	64.0	80.5	14	41	72.0	36	1870	**KH3/2-22L71X**	315
	28	25	108	66	29.5	65		87	200	93	29.0	81.5	74.0	90.5	14	50	85.5	41	2450	**KH3/2-28L71X**	315
	35	25	112	66	29.5	65		87	200	91	29.0	85.0	74.5	96.0	14	50	86.0	50	2900	**KH3/2-35L71X**	315
S[2])	08	4	73	40	13.5	33	82		115	59	13.0	56.5	49.5	64.5	9	22	47.5	19	520	**KH3/2-08S71X**	500
	10	6	73	40	13.5	33	82		115	58	13.0	56.5	49.0	65.5	9	22	47.5	22	540	**KH3/2-10S71X**	500
	12	8	76	40	13.5	33	82		115	61	13.0	58.5	51.0	67.5	9	22	47.5	24	560	**KH3/2-12S71X**	500
	14	10	80	43	17.5	38	86		115	64	16.0	62.5	54.5	72.0	9	27	52.0	27	730	**KH3/2-14S71X**	500
	16	13	86	48	19.0	40	89		115	69	17.5	66.5	58.0	76.5	9	30	57.0	30	860	**KH3/2-16S71X**	500
	20	13	90	48	19.0	40	89		115	69	17.5	70.5	60.0	81.5	9	32	57.0	36	940	**KH3/2-20S71X**	500
	25	20	109	62	24.5	57		79	200	85	24.5	82.5	70.5	94.5	14	41	72.0	46	1950	**KH3/2-25S71X**	315
	30	25	120	66	29.5	65		87	200	93	29.0	93.5	80.0	106.5	14	50	85.5	50	2650	**KH3/2-30S71X**	315
	38	32/25	124	66	29.5	65		87	200	92	29.0	99.0	83.0	114.0	14	55	86.0	60	3100	**KH3/2-38SDN2571X**	315

[1]) L = light series; [2]) S = heavy series

$\frac{\text{PN (bar)}}{10}$ = PN (MPa)

Delivery without nut and ring.

Order code suffixes			
Material	Suffix surface and material	Example	Standard sealing material (no additional suffix needed)
Stainless steel	71	KH3/2-06L71X	POM / NBR

P

KH 3-way compact BSPP ball valve steel

Female BSPP thread (ISO 1179-1)

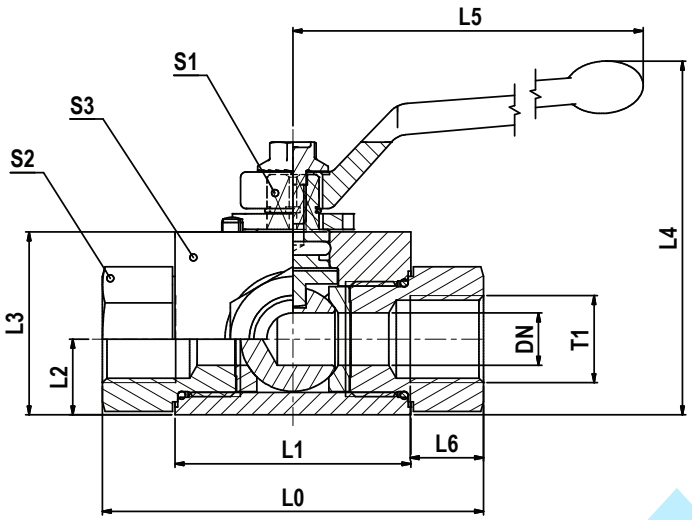

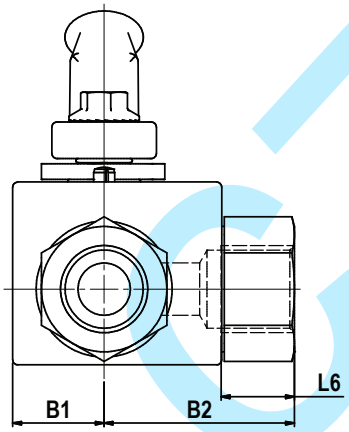

By default 3-way ball valves are manufactured as L-Bore version. Alternative design on request. Pressure inlet only from center port (connector 2).

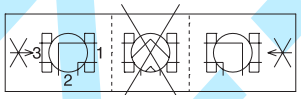

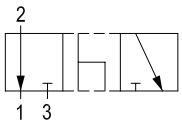

T1	DN	L0	L1	L2	L3	L4	L5	L6	B1	B2	S1	S2	S3	Weight g/1 piece	Order code	PN (bar)
G 1/8	5	69	36	14.5	30	59.5	76	12	12.0	34.5	7	19	30	370	**KH3/2-1/8CFX**	500
G 1/4	6	69	36	14.5	30	59.5	76	12	12.0	34.5	7	19	30	340	**KH3/2-1/4CFX**	500
G 3/8	10	73	45	14.5	35	67.5	100	14	17.5	36.5	8	24	40	570	**KH3/2-3/8CFX**	500
G 1/2	13	82	51	22.0	45	98.0	113	15	19.5	41.0	10	30	45	940	**KH3/2-1/2CFX**	500
G 5/8	16	88	50	25.0	50	103.0	113	18	25.0	44.0	10	36	50	1240	**KH3/2-5/8CFX**	400
G 3/4	20	93	60	29.0	60	125.0	171	18	23.5	48.0	14	41	55	1720	**KH3/2-3/4CFX**	400
G 1	25	115	70	31.0	65	130.0	171	20	30.0	57.5	14	50	65	2650	**KH3/2-1CFX**	400
G 1 1/4	32/25	134	70	31.0	65	130.0	171	22	30.0	67.0	14	50	65	2710	**KH3/2-11/4DN25CFX**	400
G 1 1/2	40/25	139	70	31.0	65	130.0	171	24	30.0	69.5	14	55	65	2910	**KH3/2-11/2DN25CFX**	400

$\frac{\text{PN (bar)}}{10}$ = PN (MPa)

Order code suffixes			
Material	Suffix surface and material	Example	Standard sealing material (no additional suffix needed)
Steel, zinc plated, Cr(VI)-free	CF	KH3/2-1/8CFX	POM / NBR

KOVOZ.CZ

KH 3-way compact BSPP ball valve stainless steel

Female BSPP thread (ISO 1179-1)

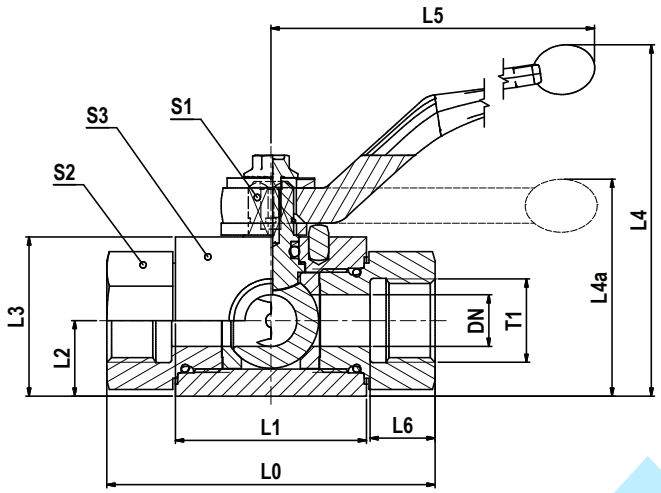

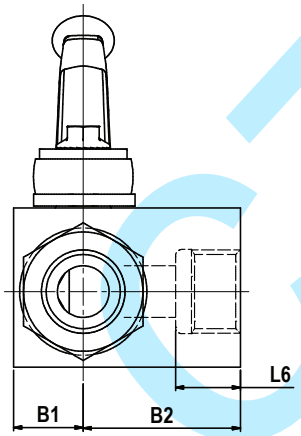

By default 3-way ball valves are manufactured as L-Bore version. Alternative design on request. Pressure inlet only from center port (connector 2).

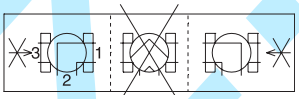

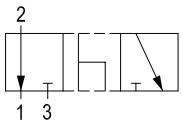

T1	DN	L0	L1	L2	L3	L4	L4a	L5	L6	B1	B2	S1	S2	S3	Weight g/1 piece	Order code	PN (bar)
G 1/8	5	69	40	13.5	33.0	82		115	10.0	13.0	34.5	9	22	47.5	550	**KH3/2-1/871X**	500
G 1/4	6	69	40	13.5	33.0	82		115	14.0	13.0	34.5	9	22	47.5	550	**KH3/2-1/471X**	500
G 3/8	10	72	43	17.5	38.0	86		115	14.0	16.0	36.0	9	27	52.0	770	**KH3/2-3/871X**	500
G 1/2	13	83	48	19.0	40.0	89		115	16.5	17.5	39.5	9	30	57.0	900	**KH3/2-1/271X**	500
G 3/4	20	95	62	24.5	57.0		79	200	18.0	24.5	47.5	14	41	72.0	1950	**KH3/2-3/471X**	315
G 1	25	113	66	29.5	65.0		87	200	20.0	29.0	56.5	14	50	85.5	2400	**KH3/2-171X**	315
G 1 1/4	30	111	81	39.0	84.5		115	320	22.0	39.0	55.0	17	60	94.0	5400	**KH3/2-11/471X**	350
G 1 1/2	38	130	104	53.0	106.0		136	320	24.0	53.0	65.0	17	75	118.0	9400	**KH3/2-11/271X**	350
G 2	48	150	118	58.0	116.0		146	320	26.0	58.0	75.0	17	95	133.0	13000	**KH3/2-271X**	350

$\frac{\text{PN (bar)}}{10}$ = PN (MPa)

Order code suffixes			
Material	Suffix surface and material	Example	Standard sealing material (no additional suffix needed)
Stainless steel	71	KH3/2-1/871X	POM / NBR

KH 3-way compact NPT ball valve steel

Female NPT thread (SAE 476)

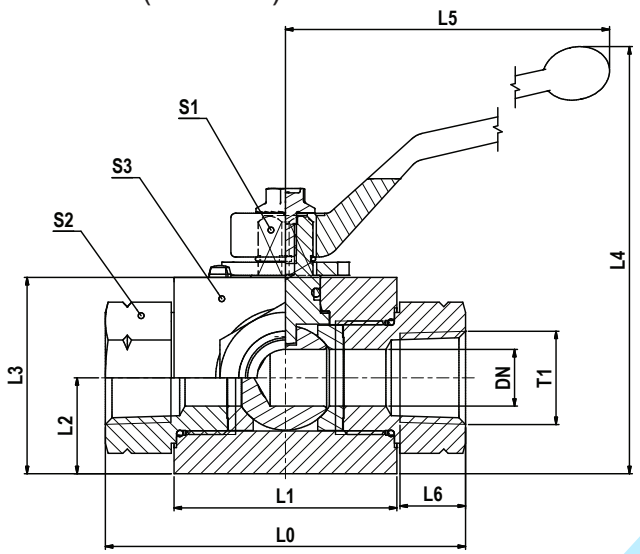

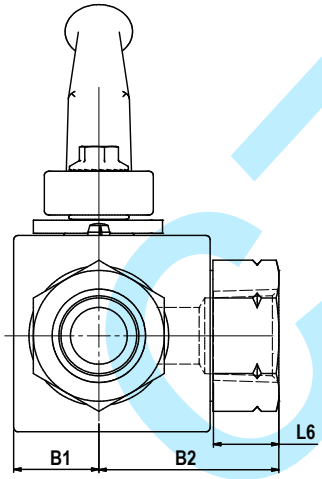

By default 3-way ball valves are manufactured as L-Bore version. Alternative design on request. Pressure inlet only from center port (connector 2).

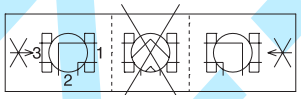

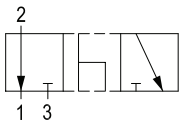

T1	DN	L0	L1	L2	L3	L4	L5	L6	B1	B2	S1	S2	S3	Weight g/1 piece	Order code	PN (bar)
1/8-27 NPT	5	69	36	14.5	30	59.5	76	7.0	12.0	34.5	7	19	30	370	**KH3/2-1/8NPTCFX**	500
1/4-18 NPT	6	69	36	14.5	30	59.5	76	10.0	12.0	34.5	7	19	30	340	**KH3/2-1/4NPTCFX**	500
3/8-18 NPT	10	73	45	14.5	35	67.5	100	11.5	17.5	36.5	8	24	40	570	**KH3/2-3/8NPTCFX**	500
1/2-14 NPT	13	82	51	22.0	45	98.0	113	15.0	19.5	41.0	10	30	45	940	**KH3/2-1/2NPTCFX**	500
3/4-14 NPT	20	93	60	29.0	60	125.0	171	16.0	23.5	48.0	14	41	55	1720	**KH3/2-3/4NPTCFX**	400
1-11.5 NPT	25	115	70	31.0	65	130.0	171	19.0	30.0	57.5	14	50	65	2650	**KH3/2-1NPTCFX**	400
1 1/4-11.5 NPT	32/25	134	70	31.0	65	130.0	171	19.5	30.0	67.0	14	50	65	2710	**KH3/2-11/4NPTDN25CFX**	400
1 1/2-11.5 NPT	40/25	139	70	31.0	65	130.0	171	19.5	30.0	69.5	14	55	65	2910	**KH3/2-11/2NPTDN25CFX**	400

$\frac{\text{PN (bar)}}{10}$ = PN (MPa)

Also available in stainless steel with different dimensions, e.g. KH3/2-1/8NPT71X

Order code suffixes			
Material	Suffix surface and material	Example	Standard sealing material (no additional suffix needed)
Steel, zinc plated, Cr(VI)-free	CF	KH3/2-1/8NPTCFX	POM / NBR

KOVOZ.CZ

KH – Locking Devices for Two Way and Multiway ball valves

with floating ball – steel and stainless steel

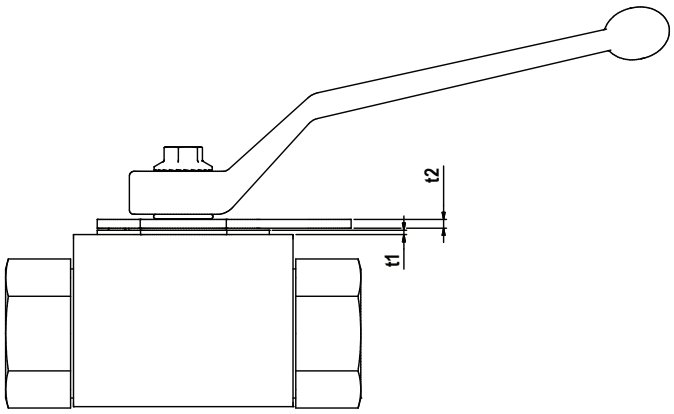

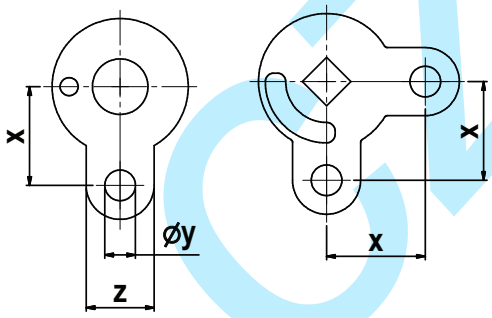

DN	t1	t2	z	y	X	Order code Steel	Order code Stainless steel
4/6	0.5	1.5	20	9	21.5	**KHLOCKINGD.SIZE1X**	**KHLOCKINGD.SIZE171X**
8/10	1.0	2.0	20	9	26.5	**KHLOCKINGD.SIZE2X**	**KHLOCKINGD.SIZE271X**
12	1.0	2.0	20	9	29.0	**KHLOCKINGD.SIZE3X**	**KHLOCKINGD.SIZE371X**
20/25	1.5	2.0	20	9	44.0	**KHLOCKINGD.SIZE5X**	**KHLOCKINGD.SIZE571X**
32/40/50	1.5	2.0	20	9	54.0	**KHLOCKINGD.SIZE6X**	-
32/40/50	1.5	1.5	20	9	54.0	-	**KHLOCKINGD.SIZE671X**

Disassembly

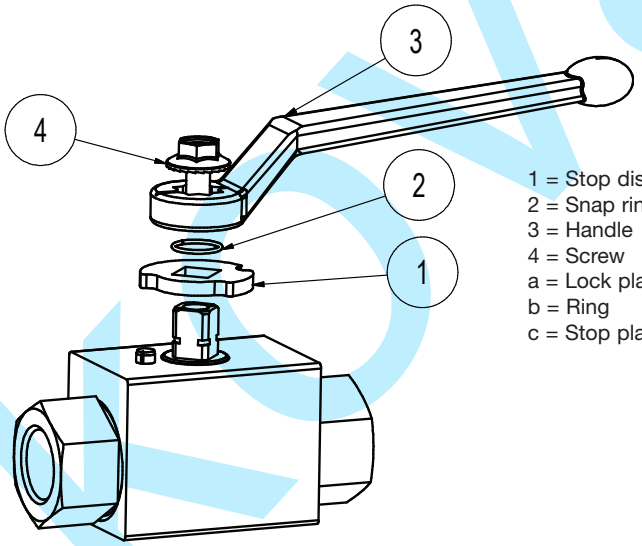

1 = Stop disc
2 = Snap ring
3 = Handle
4 = Screw
a = Lock plate
b = Ring
c = Stop plate

Assembly

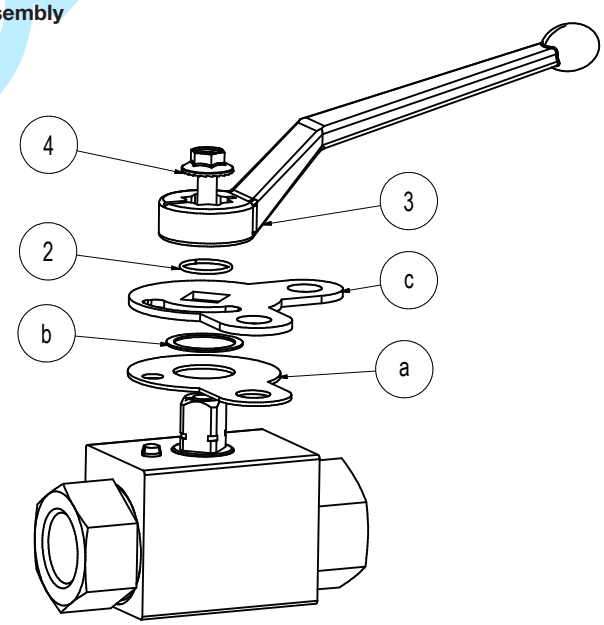

***Locking Devices are not suitable for 3/2 Way stainless steel ball valves. Alternative version on request.**

KH-B Ball valve - SAE Flange connection (3000/6000 PSI)

SAE Flange connection (ISO 6162-1/-2)

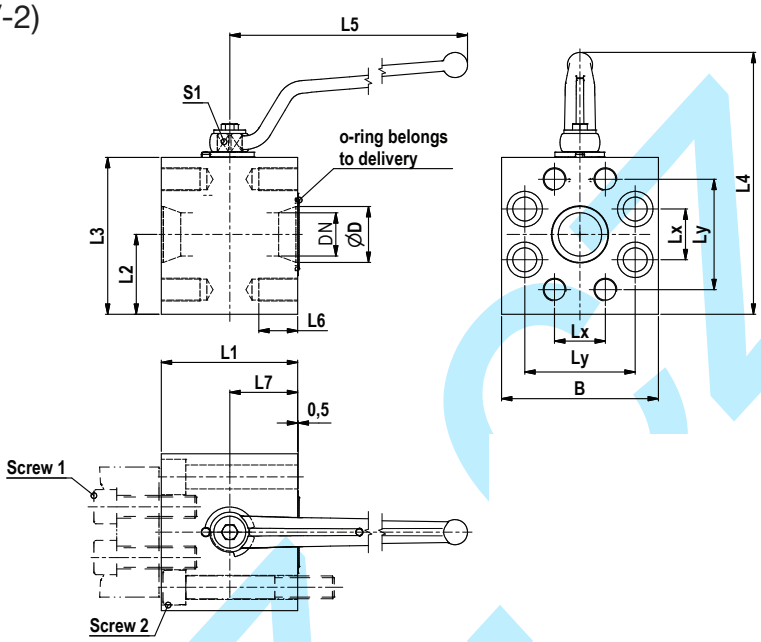

Pressure applications only with connected flanges!
Screws and flanges not included

3000 PSI Series

SAE Inch	DN	D	L1	L2	L3	L4	L5	L6	L7	Lx	Ly	B	S1	M	Screw 1	Screw 2	O-ring	Weight (Steel) kg	Order code Steel	PN (bar)
1/2	13	13	68	30.0	58.0	109	115	15	34.0	17.5	38.1	58.0	9	M08	M8x30-10.9	M8x70-10.9	18.64x3.53	1.57	**KH12B1V32CF**	350
3/4	20	20	70	37.5	75.0	146	171	17	35.0	22.2	47.6	75.0	14	M10	M10x30-10.9	M10x80-10.9	24.99x3.53	2.76	**KH20B1V33CF**	350
1	25	25	78	44.0	84.5	155	171	17	39.0	26.2	52.4	84.5	14	M10	M10x30-10.9	M10x80-10.9	32.92x3.53	3.85	**KH25B1V34CF**	320
1 1/4	25	32	90	50.0	100.0	171	171	21	45.0	30.2	58.7	100.0	14	M10	M10x30-10.9	M10x90-10.9	37.96x3.53	6.35	**KH32B1V35CF**	280
1 1/2	32	38	99	60.0	120.0	214	306	21	49.5	35.7	69.9	120.0	17	M12	M12x35-10.9	M12x100-10.9	47.22x3.53	10.40	**KH40B1V36CF**	210
2	38	49	120	70.0	137.5	232	306	21	60.0	42.9	77.8	137.5	17	M12	M12x35-10.9	M12x120-10.9	56.74x3.53	16.00	**KH50B1V38CF**	210

6000 PSI Series

SAE Inch	DN	D	L1	L2	L3	L4	L5	L6	L7	Lx	Ly	B	S1	M	Screw 1	Screw 2	O-ring	Weight (Steel) kg	Order code Steel	PN (bar)
1/2	13	13	68	30.0	58.0	109	115	15	34.0	18.2	40.5	58.0	9	M08	M8x30-10.9	M8x70-10.9	18.64x3.53	1.57	**KH12B1V62CF**	420
3/4	20	20	70	37.5	75.0	146	171	17	35.0	23.8	50.8	75.0	14	M10	M10x35-10.9	M10x80-10.9	24.99x3.53	2.73	**KH20B1V63CF**	420
1	25	25	78	44.0	84.5	155	171	21	39.0	27.8	57.2	84.5	14	M12	M12x45-10.9	M12x80-10.9	32.92x3.53	3.63	**KH25B1V64CF**	420
1 1/4	25	32	90	50.0	100.0	171	171	20	45.0	31.8	66.7	100.0	14	M12	M12x45-10.9	M12x90-10.9	37.96x3.53	6.25	**KH32B1V65CF**	420
1 1/2	32	38	99	60.0	120.0	214	306	27	49.5	36.5	79.4	120.0	17	M16	M16x55-10.9	M16x100-10.9	47.22x3.53	9.76	**KH40B1V66CF**	420
2	38	49	120	70.0	137.5	232	306	34	60.0	44.5	96.8	137.5	17	M20	M20x70-10.9	M20x130-10.9	56.74x3.53	14.74	**KH50B1V68CF**	420

$\frac{\text{PN (bar)}}{10} = \text{PN (MPa)}$

More flange ball valves see catalogue 4162.

Order code suffixes			
Material	Suffix surface and material	Example	Standard sealing material (no additional suffix needed)
Steel, zinc plated, Cr(VI)-free	CF	KH12B1V62CF	POM / NBR
Stainless steel	71	KH12B1V6271	POM / NBR

KH-A Ball valve - SAE Flange adapter connection

SAE Flange adapter (ISO 6162-1/-2)

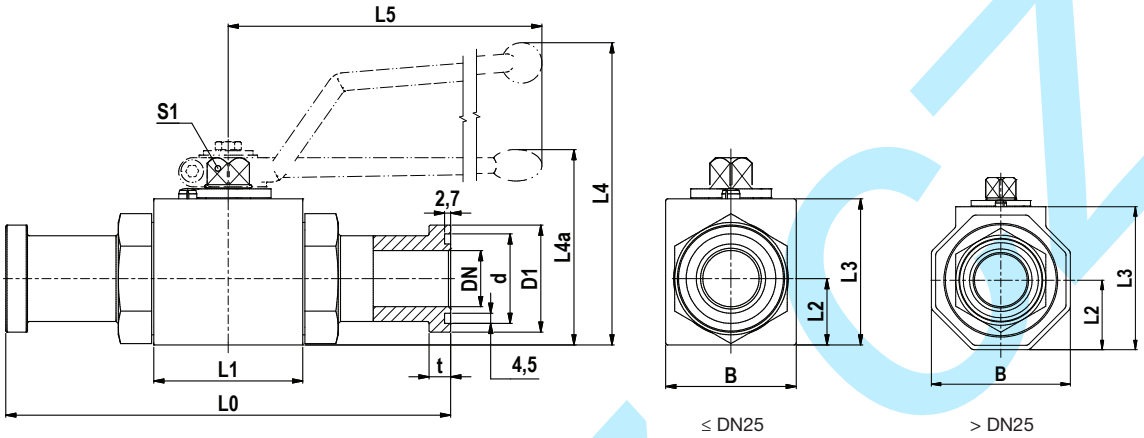

3000 PSI Series

SAE Inch	DN	L0	L1	L2	L3	L4	L4a	L5	B	D1	d	t	S1	Weight (steel)/kg	Order code	PN (bar)
1/2	13	151	48	19.0	40	89		115	35	30.2	25.5	6.8	9	0.85	**KH12A32CF**	350
3/4	20	162	62	24.5	57		79	200	49	38.1	31.9	6.8	14	1.87	**KH20A33CF**	350
1	25	178	66	29.5	65		87	200	58	44.4	39.8	8.1	14	2.70	**KH25A34CF**	315
1 1/4	32	191	80	40.5	86		107	320	81	50.8	44.6	8.1	17	4.22	**KH32A35CF**	280
1 1/2	38	231	85	50.0	103		124	320	100	60.3	54.1	8.1	17	6.54	**KH40A36CF**	210
2	48	232	100	59.0	117		138	320	118	71.4	63.6	9.6	17	9.29	**KH50A38CF**	210

6000 PSI Series

SAE Inch	DN	L0	L1	L2	L3	L4	L4a	L5	B	D1	d	t	S1	Weight (steel)/kg	Order code	PN (bar)
1/2	13	151	48	19.0	40	89		115	35	31.8	25.5	7.9	9	0.90	**KH12A62CF**	420
3/4	20	174	62	24.5	57		79	200	49	41.3	31.9	8.9	14	1.99	**KH20A63CF**	420
1	25	206	74	34.5	70		92	200	70	47.6	39.8	9.6	14	3.66	**KH25A64CF**	420
1 1/4	32	223	80	40.5	86		107	320	81	54.0	44.6	10.4	17	4.72	**KH32A65CF**	420
1 1/2	40	281	85	50.0	103		124	320	100	63.5	54.1	12.7	17	7.49	**KH40A66CF**	420
2	48	316	100	59.0	117		138	320	118	79.4	63.6	12.7	17	11.39	**KH50A68CF**	420

$\frac{\text{PN (bar)}}{10}$ = PN (MPa)

Also available in stainless steel with different dimensions, e.g. KH12A3271

Handles are part of the delivery.
O-rings are part of the delivery.

More flange ball valves see catalogue 4162.

Order code suffixes			
Material	Suffix surface and material	Example	Standard sealing material (no additional suffix needed)
Steel, zinc plated, Cr(VI)-free	CF	KH12A62CF	POM / NBR

P

KH-T Ball valve - SAE Flange connection ISO 6162 (1/2)

SAE Flange connection (ISO 6162-1/-2)

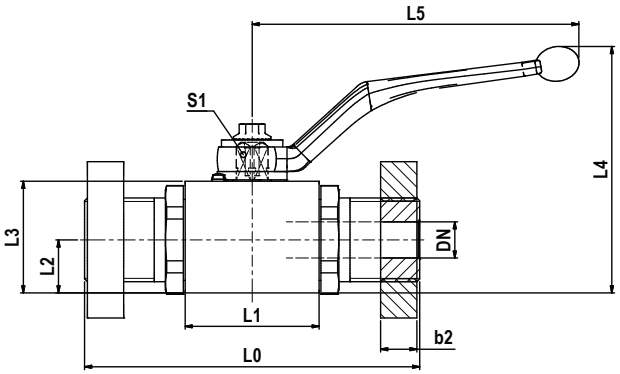

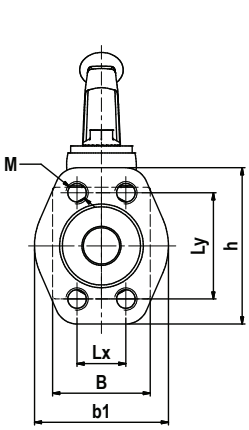

≤ DN25

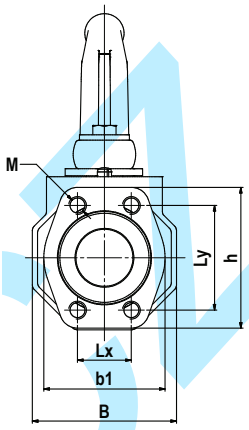

> DN25

3000 PSI series

SAE Inch	DN	L0	L1	L2	L3	L4	L5	B	Lx	Ly	b1	b2	h	M	S1	O-ring	Weight (Steel) kg	Order code	PN (bar)
1/2	13	120	48	19.0	40	89	115	35	17.5	38.1	48	13	56	M08	9	18.64x3.53	1.5	**KH-T-308-13CF**	350
3/4	20	136	62	24.5	57	127	171	49	22.2	47.6	50	14	65	M10	14	24.99x3.53	3.0	**KH-T-312-20CF**	315
1	25	148	66	29.5	65	135	171	58	26.2	52.4	60	16	70	M10	14	32.92x3.53	4.5	**KH-T-316-25CF**	315
1 1/4	32	172	80	40.5	86	180	306	81	30.2	58.7	68	16	79	M10	17	37.69x3.53	7.5	**KH-T-320-32CF**	280
1 1/4	32	172	80	40.5	86	180	306	81	30.2	58.7	68	16	79	M12	17	37.69x3.53	7.5	**KH-T-320-32TM12CF**	210
1 1/2	40	177	85	50.0	103	197	306	100	35.7	69.9	78	16	93	M12	17	47.22x3.53	11.1	**KH-T-324-40CF**	210
2	50	196	100	59.0	117	211	306	118	42.9	77.8	90	16	102	M12	17	56.74x3.53	19.3	**KH-T-332-50CF**	210
2 1/2	50/65	196	100	59.0	117	211	306	118	50.8	88.9	105	19	114	M12	17	69.44x3.53	19.9	**KH-T-340-50CF**	175

6000 PSI series

SAE Inch	DN	L0	L1	L2	L3	L4	L5	B	Lx	Ly	b1	b2	h	M	S1	O-ring	Weight kg	Order code	PN (bar)
1/2	13	120	48	19.0	40	89	115	35	18.2	40.5	48	16	56	M08	9	18.64x3.53	1.6	**KH-T-608-13CF**	420
3/4	20	136	62	24.5	57	127	171	49	23.8	50.8	60	19	71	M10	14	24.99x3.53	3.3	**KH-T-612-20CF**	420
1	25	156	74	34.5	70	140	171	70	27.8	57.2	70	24	81	M12	14	32.92x3.53	5.0	**KH-T-616-25CF**	420
1 1/4	32	172	80	40.5	86	180	306	81	31.8	66.7	78	27	95	M12	17	37.69x3.53	8.5	**KH-T-620-32CF**	420
1 1/4	32	172	80	40.5	86	180	306	81	31.8	66.7	78	27	95	M14	17	37.69x3.53	8.5	**KH-T-620-32TM14CF**	420
1 1/2	40	177	85	50.0	103	197	306	100	36.5	79.4	94	30	112	M16	17	47.22x3.53	12.2	**KH-T-624-40CF**	420
2	50	196	100	59.0	117	211	306	118	44.5	96.8	114	35	134	M20	17	56.74x3.53	21.5	**KH-T-632-50CF**	420

Also available in stainless steel with different dimensions, e.g. KH-T-308-13SS

More flange ball valves see catalogue 4162.

Order code suffixes			
Material	Suffix surface and material	Example	Standard sealing material (no additional suffix needed)
Steel, zinc plated, Cr(VI)-free	CF	KH-T-308-13CF	POM / NBR

KHBLOCK 2-way manifold ball valve

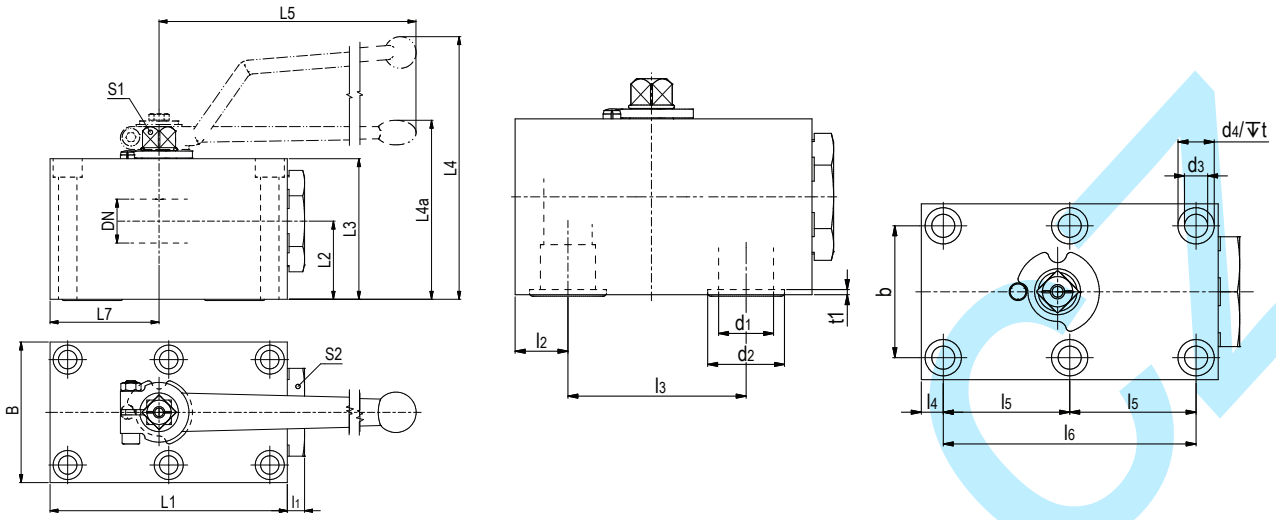

DN	L1	L2	L3	L4	L4a	L5	L7	l1	l2	l3	l4	l5	l6	b	B	d1	d2	d3	d4	t	t1
6	57	19.5	35	67		80	26.0	6	8.5	35	8.5	17.5	35	27	40	6.0	11.8	6.5	10.5	7.0	2.0
10	70	24.5	45	96		115	29.0	10	10.0	44	7.5	27.5	55	40	55	9.5	14.9	8.4	13.5	8.5	2.0
12	98	34.0	55	104		115	42.5	10	16.0	58	7.5	41.5	83	45	60	13.0	24.9	8.4	13.5	7.0	2.0
20	117	37.5	70		92	200	51.0	10	20.0	69	10.0	48.5	97	51	70	20.0	29.0	10.5	16.5	10.5	2.0
25	135	44.5	80	on	102	200	62.0	10	24.0	81	10.0	57.5	115	60	80	25.0	34.9	10.5	16.5	10.5	2.5
32	165	54.5	100	request	130	320	75.0	11	29.0	96	12.0	68.0	136	78	100	32.0	40.0	13.0	19.0	12.0	2.0
40	200	57.0	110		140	320	84.5	17	28.5	112	28.5	56.0	112	95	130	38.0	47.7	16.5	25.0	19.0	2.5
50	240	71.0	129		159	320	106.0	15	38.0	136	38.0	68.0	136	112	150	48.0	59.8	21.0	31.0	21.5	2.5

DN	S1	S2	Hexagon Screws	Torque for screws	O-ring	Weight kg	Order code steel	PN (bar)
6	7	19	6x M6x40 - 12.9	14	7×2.5	0.60	**KHBLOCKDN6CF**	500
10	9	30	6x M8x40 - 12.9	35	10×2.5	1.30	**KHBLOCKDN10CF**	500
12	9	32	6x M8x60 - 12.9	35	20×2.5	2.30	**KHBLOCKDN12CF**	420
20	14	46	6x M10x80 - 12.9	70	23.47×2.62	3.92	**KHBLOCKDN20CF**	420
25	14	50	6x M10x90 - 12.9	70	29×3	5.68	**KHBLOCKDN25CF**	420
32	17	70	6x M12x110 - 12.9	110	34.59×2.62	11.00	**KHBLOCKDN32CF**	420
40	17	80	6x M16x120 - 12.9	300	42×3	18.78	**KHBLOCKDN40CF**	420
50	17	90	6x M20x140 - 12.9	600	54×3	29.70	**KHBLOCKDN50CF**	420

Tmin/Tmax Steel -20°C / 100°C
Tmin/Tmax Stainless steel -30°C / 100°C

Handles are part of the delivery.
O-ring are part of the delivery.
Screws are not part of the delivery.

Order code suffixes			
Material	Suffix surface and material	Example	Standard sealing material (no additional suffix needed)
Steel, zinc plated, Cr(VI)-free	CF	KHBLOCKDN10CF	POM / NBR
Stainless steel	71	KHBLOCKDN1071	POM / NBR

P

KHBLOCK 3-way manifold ball valve

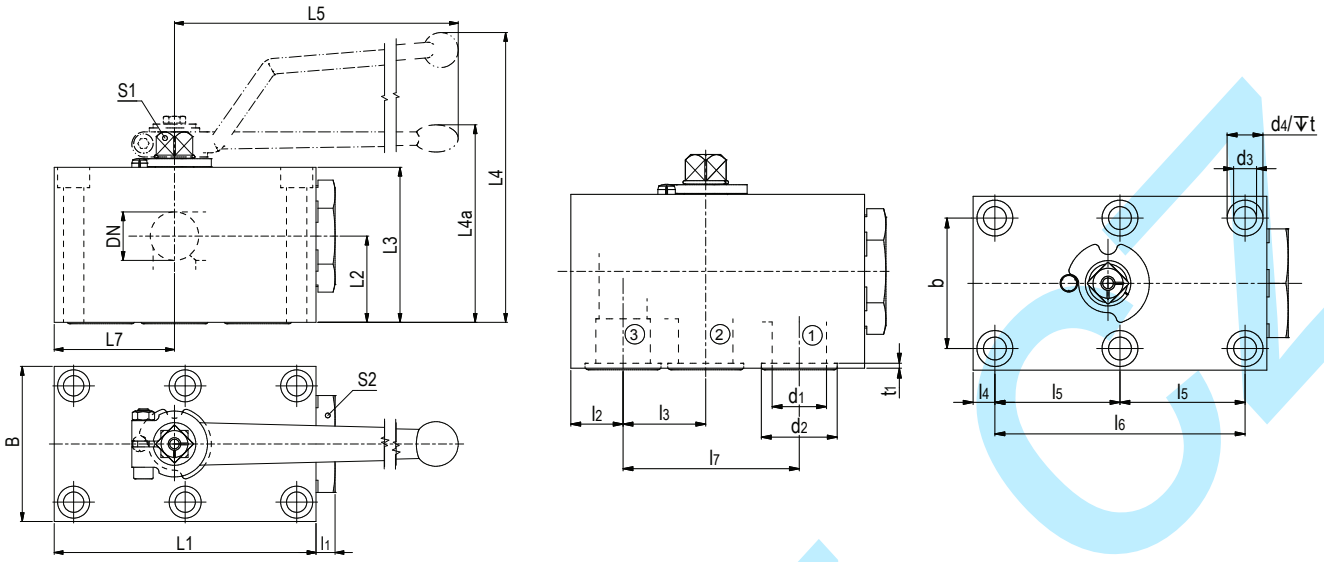

Pressure inlet only from center port (connector 2)

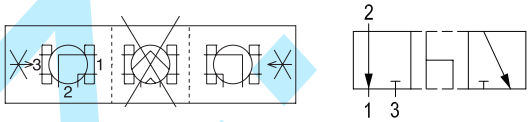

DN	L1	L2	L3	L4	L4*	L5	L7	l1	l2	l3	l4	l5	l6	l7	b	B	d1	d2	d3	d4
6	57	19.5	35	67		80	26.0	6	8.5	17.5	8.5		35	35	27	40	6.0	12.0	6.5	10.5
10	70	24.5	45	93		115	29.0	10	10.0	19.0	7.5		55	44	40	55	9.5	15.0	8.5	13.5
12	98	34.0	55	104		115	42.5	10	16.0	26.5	7.5	41.5	83	58	45	60	13.0	25.0	8.5	13.5
20	117	37.5	70	on request	92	200	51.0	10	20.0	31.0	10.0	48.5	97	69	51	70	20.0	29.0	10.5	16.5
25	135	44.5	80		102	200	62.0	10	24.0	38.0	10.0	57.5	115	81	60	80	25.0	35.0	10.5	16.5
32	165	54.5	100		130	320	75.0	11	29.0	46.0	12.0	68.0	136	96	78	100	32.0	40.0	13.0	19.0
40	200	57.0	110		140	320	84.5	17	28.5	56.0	28.5	56.0	112	112	95	130	38.0	47.5	16.5	25.0
50	240	71.0	129		159	320	106.0	15	38.0	68.0	38.0	68.0	136	136	112	150	48.0	60.0	21.0	31.0

DN	t	t1	S1	S2	Hexagon screws	Torque for screws	O-ring	Weight kg	Order code steel	PN (bar)
6	7.0	2.0	7	19	4x M6x40 - 12.9	14	7×2.5	0.60	**KHBLOCK3/2DN6CF**	500
10	8.5	2.0	9	30	4x M8x40 - 12.9	35	10×2.5	1.30	**KHBLOCK3/2DN10CF**	500
12	7.0	2.0	9	32	6x M8x60 - 12.9	35	20×2.5	2.32	**KHBLOCK3/2DN12CF**	420
20	10.5	2.0	14	46	6x M10x80 - 12.9	70	23.47×2.62	3.90	**KHBLOCK3/2DN20CF**	420
25	10.5	2.5	14	50	6x M10x90 - 12.9	70	29×3	5.68	**KHBLOCK3/2DN25CF**	420
32	12.0	2.0	17	70	6x M12x110 - 12.9	110	34.59×2.62	11.00	**KHBLOCK3/2DN32CF**	420
40	19.0	2.5	17	80	6x M16x120 - 12.9	300	42×3	18.70	**KHBLOCK3/2DN40CF**	420
50	21.5	2.5	17	90	6x M20x140 - 12.9	600	54×3	28.80	**KHBLOCK3/2DN50CF**	420

Tmin/Tmax Steel -20°C / 100°C
Tmin/Tmax Stainless steel -30°C / 100°C

Handles are part of the delivery.
O-ring are part of the delivery.
Screws are not part of the delivery.

Order code suffixes			
Material	Suffix surface and material	Example	Standard sealing material (no additional suffix needed)
Steel, zinc plated, Cr(VI)-free	CF	KHBLOCK3/2DN6CF	POM / NBR
Stainless steel	71	KHBLOCK3/2DN671	POM / NBR

Technial data flow control valves

Leakage rate

Flow control valves: Max. 0.01 x DN mm^3/sec - Test medium water (DIN EN 12266)
Check valves: Max. 1.0 x DN mm^3/sec - Test medium water (DIN EN 12266)

Flow control valves can not be used as shut off devices. Small leakage rates are possible in closed position.

The pressure ratings PN for flow control valves include design factor 1.5 (according DIN 3230 T5 and ISO 5208).

Steel Flow control valves

Material:
Body: Steel, Cr(VI)-free plated

Seals:
O-ring: NBR
According to application, different seal combinations are available*

Temperature range:
–20 up to +100 °C.

Cracking pressure:
0.5 bar (optional 4.5 bar)

Stainless Steel Flow control valves

Material:
Body: Stainless steel

Seals:
O-ring: NBR
According to application, different seal combinations are available.*

Temperature range:
–30 up to +100 °C.

Cracking pressure:
0.5 bar (optional 4.5 bar)

Caution!
Please note the admissible pressure ratings of connection components!

Pressure drop curves:

On demand

***Remarks:**
For clarification of the suitability of the restriction valves for different media and applications please provide the following data: system pressure, medium, temperature, possible pressure peaks (including pressure and frequency) and possible operation with full differential pressure.

kovaz.cz

RDV Flow Control Valve

Female BSPP thread (ISO 1179-1)

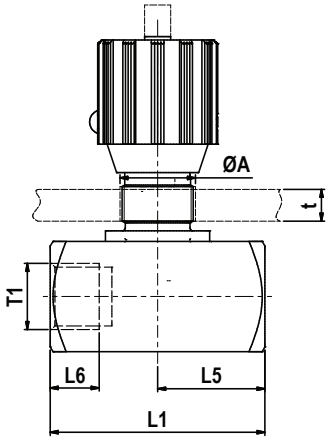

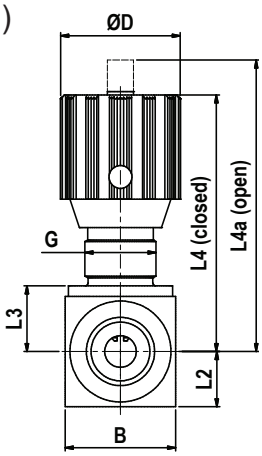

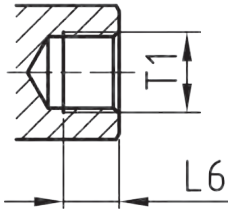

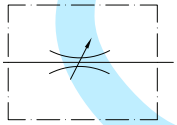

T1	L1	L2	L3	L4	L4a	L5	L6	B	D	A	G	tmax	Order code steel	PN (bar)
G 1/8	38	8.0	10.0	51	56	19	9.0	16	24	13	Pg7	4	**RDV1/8CFX**	350
G 1/4	48	12.5	14.5	65	71	24	12.0	25	29	19	Pg11	7	**RDV1/4CFX**	350
G 3/8	58	15.0	17.0	68	75	29	13.5	30	29	19	Pg11	7	**RDV3/8CFX**	350
G 1/2	68	17.5	21.0	82	92	34	14.5	35	38	23	Pg16	7	**RDV1/2CFX**	350
G 3/4	78	22.5	26.0	96	106	39	17.5	45	38	23	Pg16	7	**RDV3/4CFX**	350
G 1	108	25.0	30.0	121	134	54	19.5	50	49	38	Pg29	10	**RDV1CFX**	350
G 1 1/4	108	30.0	35.0	126	139	54	21.5	60	49	38	Pg29	10	**RDV11/4CFX**	350
G 1 1/2	108	35.0	40.0	131	144	54	23.5	70	49	38	Pg29	10	**RDV11/2CFX**	350
G 2	120	45.0	50.0	141	154	60	25.5	90	49	38	Pg29	10	**RDV2CFX**	350

Flow control valves should not be used as shut-off device.
NPT and UNF connections on request.

Order code suffixes			
Material	Suffix surface and material	Example	Standard sealing material (no additional suffix needed)
Steel, zinc plated, Cr(VI)-free	CF	RDV1/8CFX	POM / NBR
Stainless steel	71	RDV1/871X	POM / NBR

kovalcz

RDVR Flow Control Check Valve

Female BSPP thread (ISO 1179-1)

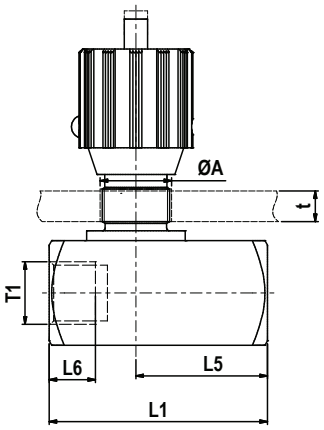

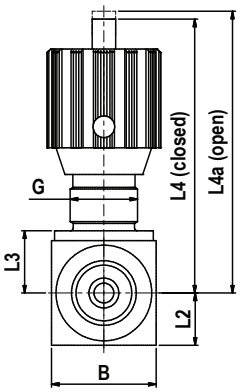

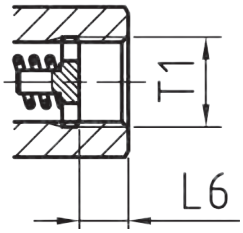

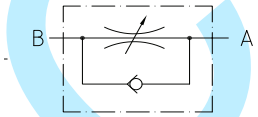

T1	L1	L2	L3	L4	L4a	L5	L6	B	D	A	G	tmax	Order code steel	PN (bar)
G 1/8	45	8.0	10.0	51	56	26.0	9.5	16	24	13	Pg7	4	**RDVR1/8CFX**	350
G 1/4	55	12.5	14.5	65	71	33.5	13.5	25	29	19	Pg11	7	**RDVR1/4CFX**	350
G 3/8	65	15.0	17.0	68	75	41.0	13.5	30	29	19	Pg11	7	**RDVR3/8CFX**	350
G 1/2	73	17.5	21.0	82	92	44.0	15.5	35	38	23	Pg16	7	**RDVR1/2CFX**	350
G 3/4	88	22.5	26.0	96	106	57.0	17.5	45	38	23	Pg16	7	**RDVR3/4CFX**	350
G 1	127	25.0	30.0	121	134	77.0	19.5	50	49	38	Pg29	10	**RDVR1CFX**	350
G 1 1/4	143	30.0	35.0	126	139	93.0	21.5	60	49	38	Pg29	10	**RDVR11/4CFX**	350
G 1 1/2	143	35.0	40.0	131	144	91.0	23.5	70	49	38	Pg29	10	**RDVR11/2CFX**	350
G 2	165	45.0	50.0	141	154	111.0	25.5	90	49	38	Pg29	10	**RDVR2CFX**	350

Flow control valves should not be used as shut-off device.
NPT and UNF connections on request.

Order code suffixes			
Material	Suffix surface and material	Example	Standard sealing material (no additional suffix needed)
Steel, zinc plated, Cr(VI)-free	CF	RDVR1/8CFX	POM / NBR
Stainless steel	71	RDVR1/871X	POM / NBR

Kovalcz

DV Shut-off valve PN 10 – Casing DIN 3512

EO 24° cone end / EO 24° cone end

(with internal threaded spindle)
For cold and warm water* up to 80°C, compressed air, mineral oils and fuel oils types EL and L, 6 bar and up to 80°C.
The pressure specification PN for hand-operated shut-off valves applies to the design factor 1,5 (according DIN 3230 T5 and ISO 5208).

Caution!
Please note the admissible pressure ratings for the EO-tube ends.

DVAE
EO tube end ⇒ male BSPP

DVAA
male BSPP ⇐ EO tube end

DV-valves with male BSPP thread on request.

*Indicate type of water or additive if any

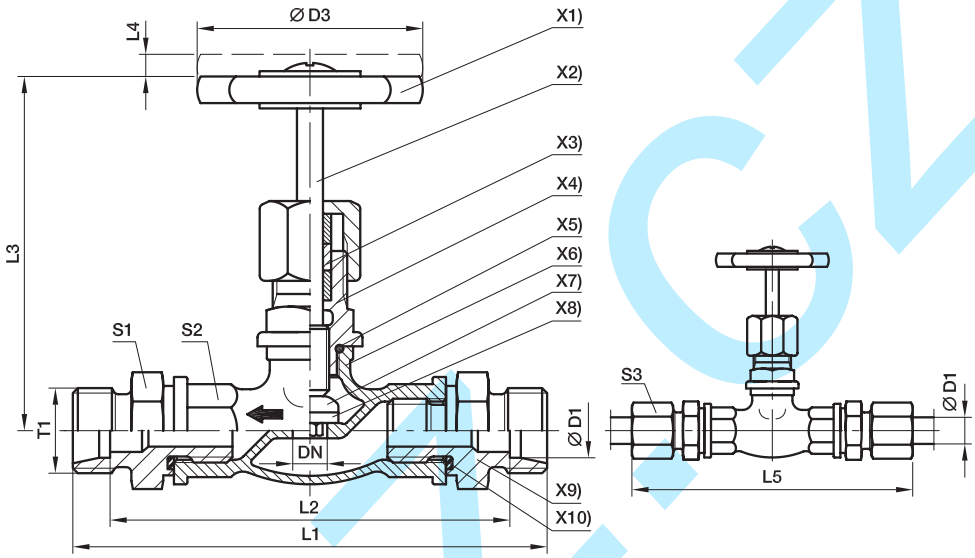

X1) **Hand wheel:** material: Polyamid
X2) **Spindle:** material: Brass 2.0401
X3) **Stuffing boxpacking:** PTFE Compound
X4) **Haed piece:** material: Brass 2.0401
X5) **Sealing:** O-ring NBR (e. g. Perbunan)
X6) **Casing:** material: Brass 2.0340.02
X7) **Valve cone:** material: Brass 2.0401
X8) **Shut-off sealing:** NBR (e.g. Perbunan)
X9) **Male stud fitting:** material: Brass 2.0540
X10) **Sealing:** Eolastic-sealing NBR (e.g. Perbunan)

Series	D1 ⊕	T1	DN	D3	L1	L2	L3	L4	L5	S1	S2	S3	Weight g/1 piece	Order code*	PN (bar)[1] without surface
L[3]	06	M 12×1.5	5	50	102	88	63	7	117	22	21	14	313	**DV06LX**	10
	08	M 14×1.5	6	50	102	88	63	7	117	22	21	17	305	**DV08LX**	10
	10	M 16×1.5	8	50	104	90	63	7	119	22	21	19	308	**DV10LX**	10
	12	M 18×1.5	10	50	104	90	63	7	119	22	21	22	304	**DV12LX**	10
	15	M 22×1.5	12	50	107	93	65	8	123	27	25	27	426	**DV15LX**	10
	18	M 26×1.5	16	50	109	94	67	8	126	27	25	32	434	**DV18LX**	10
	22	M 30×2.0	20	60	123	108	67	8	140	32	32	36	670	**DV22LX**	10
	28	M 36×2.0	25	60	140	125	95	10	158	41	38	41	1030	**DV28LX**	10
	35	M 45×2.0	32	70	166	145	102	10	188	50	47	50	1640	**DV35LX**	10

[1]) Pressure shown = item deliverable
[3]) L = light series

$\frac{PN\ (bar)}{10}$ = PN (MPa)

Delivery without nut and ring. Information on ordering complete fittings or alternative sealing materials see page I7.

*Please add the **suffixes** below according to the material/ surface required.

Order code suffixes			
Material	Suffix surface and material	Example	Standard sealing material (no additional suffix needed)
Brass 2.0340.02	without	DV06LX	PTFE / NBR

LD Shut-off valve PN 40

EO 24° cone end / EO 24° cone end

(with internal threaded spindle)
For hydraulic oil, mineral, oil, fuel oil, Diesel, water* etc. Temperature up to 150°C. For steam up to 10 bar.
For compressed air up to 35 bar on request. CS DIN 86501 Rg.-N.

The pressure specification PN for hand-operated shut-off valves applies to the design factor 1,5 (according DIN 3230 T5 and ISO 5208).

Caution!
Please note the admissible pressure ratings for the EO-tube ends.

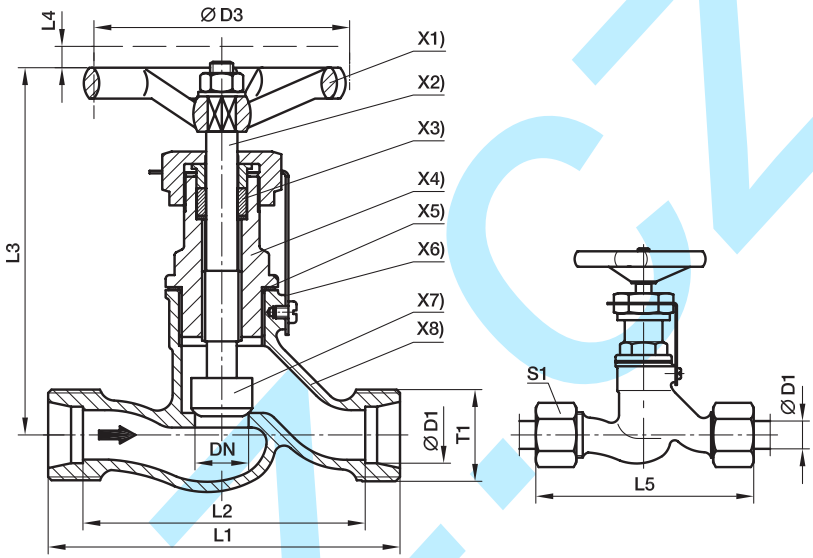

X1) **Hand wheel:** Plastic material typ 74 according to DIN 388 Form C
X2) **Spindle:** with internal thread. Material: Cu Zn 35 Ni 2
X3) **Stuffing box packing:** Graphite
X4) **Head piece:** material: Cu Zn 39 Pb 3
X5) **Sealing:** Copper ring
X6) **Locking plates:** material: St. 37/zinc plated
X7) **Valve cone:** loose tip material: Cu Zn 35 Ni 2
X8) **Casing:** material: G-Cu Sn 5Zn Pb (Rg 5 according to DIN 1705)

EO-tube connection:
for **copper** tubes nuts, cutting and locking rings of brass

Attention:
for **steel** tubes: nuts, progressive rings of steel **specify when ordering**
We recommend pre-installation in hardened pre-installation body (see assembly instructions)

Series	D1	T1	DN	D3	L1	L2	L3	L4	L5	S1	Weight g/1 piece	Order code*	PN (bar)[1] without surface
S[4]	10	M 18×1.5	6	63	60	45	98	7	77	22	383	**LD10SX**	40
	12	M 20×1.5	8	63	64	49	98	7	81	24	401	**LD12SX**	40
	14	M 22×1,5	10	63	70	54	98	7	89	27	417	**LD14SX**	40
	16	M 24×1.5	12	80	84	67	110	9	103	30	631	**LD16SX**	40
	20	M 30×2.0	16	80	90	69	110	9	112	36	688	**LD20SX**	40
	25	M 36×2.0	20	100	110	86	129	12	134	46	1191	**LD25SX**	40
	30	M 42×2.0	25	100	120	93	129	12	146	50	1322	**LD30SX**	40
	38	M 52×2.0	32	100	140	108	158	12	169	60	2268	**LD38SX**	40

[1] Pressure shown = item deliverable
[4] S = heavy series

$\frac{\text{PN (bar)}}{10}$ = PN (MPa)

Delivery without nut and ring. Information on ordering complete fittings or alternative sealing materials see page I7.

*Please add the **suffixes** below according to the material/ surface required.

Order code suffixes			
Material	Suffix surface and material	Example	Standard sealing material (no additional suffix needed)
Gunmetal (Rg 5) 2.1096	without	LD10SX	Graphit / Metal

P

VDHA High pressure valve

EO tube end / EO tube end

with internal threaded spindle and body of low grade forged stainless steel
The pressure specification PN for hand-operated shut-off valves applies to the design factor 1,5 (according DIN 3230 T5 and ISO 5208).

Caution!
Please note the admissible pressure ratings for the EO-tube ends.

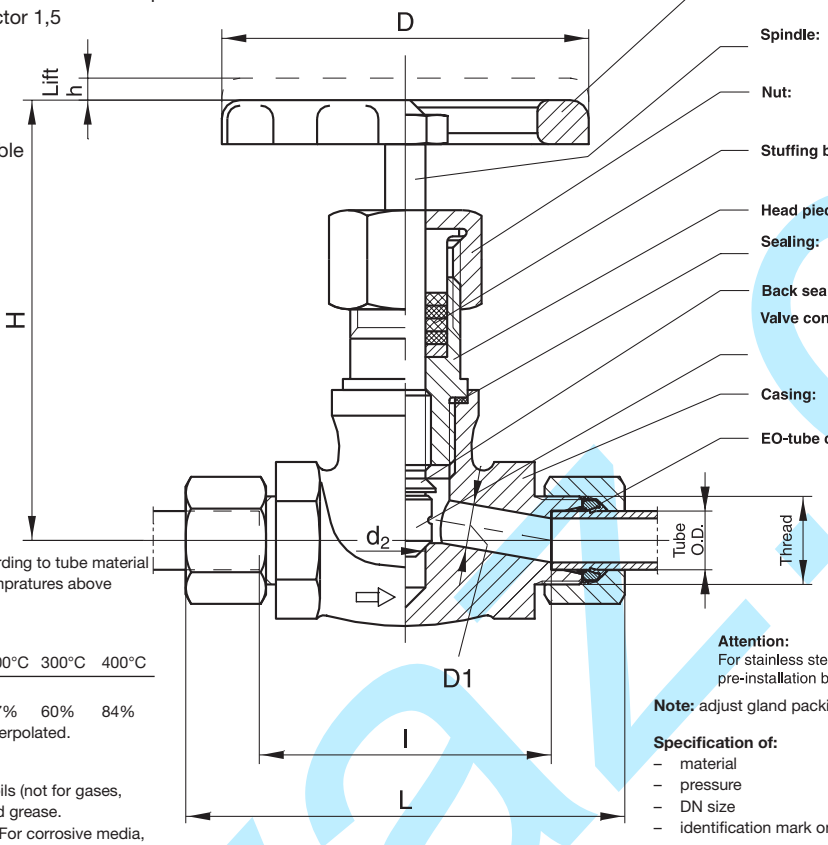

Temperatures up to 400°C according to tube material (consider pressure drop with tempratures above 50°C)

Required pressure reductions

temperature	50°C	100°C	200°C	300°C	400°C
pressure reductions	6%	15%	37%	60%	84%

Intermediate values are to be interpolated.

Applications:
For water, steam, hot and cold oils (not for gases, oxygen etc.) on mineral oil based grease.
For compressed air up to 50°C. For corrosive media, acids, fire resistant fluid etc.

Hand wheel: Aluminium die casting GD-AL Si 8 Cu 3 Operating position: completely opened or closed.
Spindle: with internal thread. Material 1.4021
Nut: Material 1.0718
Stuffing box packing: GA 24 (Graphit)
Head piece: Material 1.0460
Sealing: between casing and head piece, material-no. 2.4066
Back sealing: against head piece
Valve cone: hardened loose tip material 1.4122. For VDHA 30-PS and 38-PS material 1.0460 forged with Cr 17
Casing: forged. Material No. 1.4104
EO-tube connection: Nuts and progressive rings of steel for the assembly of steel tubes.
For stainless steel tubes material no. 1.4571 or 1.4541 and temperatures above 120°C progressive rings and nuts of 1.4571 are to used. (Please specify when ordering)

Attention:
For stainless steel tubes always pre-assembly in hardened pre-installation body (see assembly instructions)

Note: adjust gland packing prior to initial working period.

Specification of:
- material
- pressure
- DN size
- identification mark on hand wheel.

Series	D1	PN (bar)	DN	Thread	d2	H	L	l	h	D	Weight g/1 piece	With Nut and Ring Dry Technology EO-2	With Nut and Ring PSR steel
S[4])	06	630	4	M 14×1.5	9.5	120	95	66	6	100	891	**VDHA06ZS**	**VDHA06S**
	08	630	5	M 16×1.5	9.5	120	95	66	6	100	917	**VDHA08ZS**	**VDHA08S**
	10	630	7	M 18×1.5	9.5	120	97	65	6	100	937	**VDHA10ZS**	**VDHA10S**
	12	630	8	M 20×1.5	9.5	120	97	65	6	100	940	**VDHA12ZS**	**VDHA12S**
	14	630	10	M 22×1.5	9.5	120	119	84	6	100	1194	**VDHA14ZS**	**VDHA14S**
	16	400	11	M 24×1.5	9.5	120	119	83	6	100	1209	**VDHA16ZS**	**VDHA16S**
	20	400	13	M 30×2.0	11.0	120	122	79	6	100	1292	**VDHA20ZS**	**VDHA20S**
	25	400	17	M 36×2.0	12.0	143	154	106	9	125	2013	**VDHA25ZS**	**VDHA25S**
	30	250	19	M 42×2.0	22.5	164	156	103	12	125	2596	**VDHA30ZS**	**VDHA30S**
	38	250	25	M 52×2.0	26.5	198	179	118	12	180	4972	**VDHA38ZS**	**VDHA38S**

[1]) Pressure shown = item deliverable
[4]) S = heavy series

$\frac{PN\ (bar)}{10} = PN\ (MPa)$

WV Alternating valve

EO 24° cone end / EO 24° cone end / EQ 24° cone end

These valves permit the passage of flow from either inlet 1 or 2 to the outlet port whilst shutting of the inlet port not in use.
The shutting off, of an inlet is achieved by a floating ball bearing which moves by the pressure of the flow.

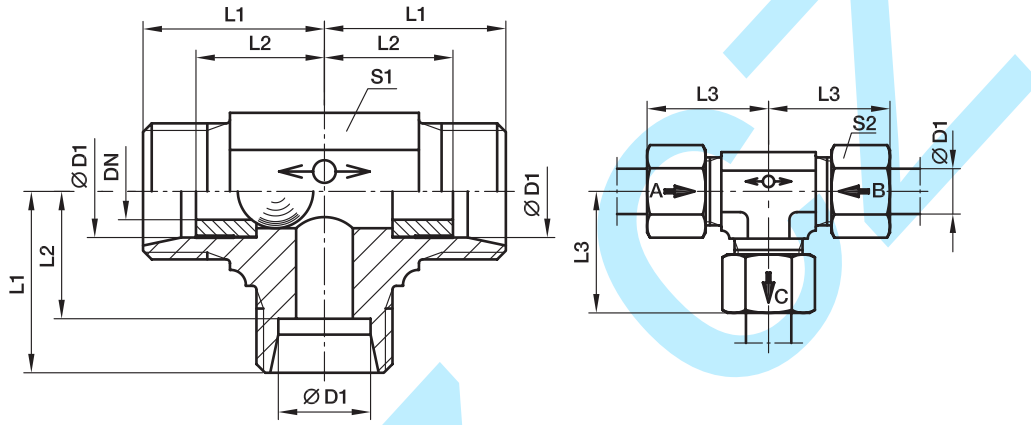

Material: steel
Surface finish: Cr(VI)-free.

Valves are not recommended for compressed air and gases.
WV-valves are not to be used in connection with weld nipples, swivel nuts etc. where there is no contact with a shoulder stop in the inner cone.

Temperature range without pressure reductions: –40°C up to +120°C.

Recommended fitting position as shown in the picture.

Leakage rate for alternating valves hydraulic test
with test pressure = P_{max}: approx. 20 drops (test period of 1 minute).

Directions of flow:

$D_1 \rightarrow D_3 = D_2$ closed
$D_2 \rightarrow D_3 = D_1$ closed

Series	D1	T1	DN	L1	L2	L3	S1	S2	Weight g/1 piece	Order code*	PN (bar)[1] CF
L[3]	8	M 14×1.5	4.5	21	14	29	14	17	53	**WV08LOMD**	160
	10	M 16×1.5	6.0	22	15	30	17	19	73	**WV10LOMD**	160
	12	M 18×1.5	7.5	24	17	32	19	22	96	**WV12LOMD**	160
	15	M 22×1.5	10.0	28	21	36	19	27	134	**WV15LOMD**	160

[1] **Pressure shown = item deliverable**
[3] L = light series

$\frac{PN\ (bar)}{10} = PN\ (MPa)$

Delivery without nut and ring. Information on ordering complete fittings or alternative sealing materials see page I7.

*Please add the **suffixes** below according to the material/ surface required.

Order code suffixes			
Material	Suffix surface and material	Example	Standard sealing material (no additional suffix needed)
Steel, zinc plated, Cr(VI)-free	CF	WV08LOMDCF	Steel ball

ELA air-bleed valves

Hydraulic systems can effectively be bled with ELA air-bleed valves.

Easily installed – maintenance-free – almost unlimited service life – simple – safe – reliable – efficient.
The system can be operated immediately. No control irregularities due to air contamination of the pressure medium.
Cost saving, as non-productive de-aeration time is saved.

Air bleed between: – opening pressure 0.05 bar
– closing pressure ≥ 0.5 bar

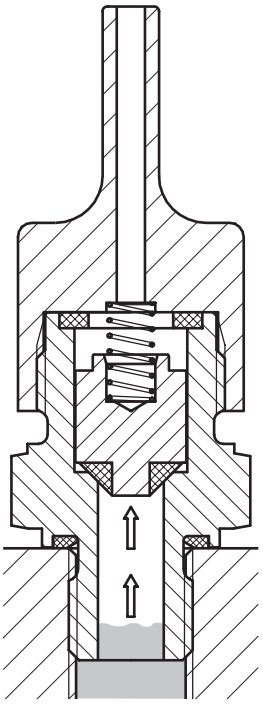

BEFORE BLEEDING
System without pressure

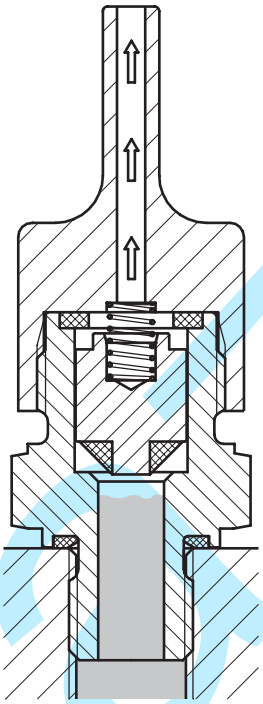

AIR ESCAPES
System operated
(0.05 bar)

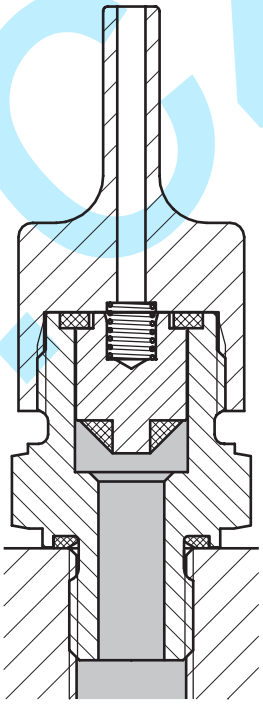

AIR REMOVED
System under pressure
(≥ 0.5 bar)

The principle of the air-bleed valve is based on the difference in behaviour of gases and liquids under pressure because of their dependence on viscosity. A piston, housed in the bore of the body with defined clearance, effects the opening and closing of the valve on start-up or shut-down of the system. On setting the system in operation, the accumulated air escapes until the liquid column of the pressure medium reaches the piston. The pressure of the liquid lifts the piston against the upper, high pressure seal, securely closing the air-vent (slight oil discharge may occur). When pressure is released the spring releases the piston reopening the air-vent, whereupon the procedure may be repeated. The special piston design prevents any intake of air in case of partial vacuum.

The air bleed valve should be connected vertical, at the highest point of the hydraulic system or in places where air accumulation may occur.

ELA air-bleed valves are available only for mineral oil based fluids, and within the temperature limits of –20 °C to +90°C.

ELA Air-bleed valves

Male BSPP thread with Eolastic seal

PN (bar)	Dry Technology Steel	Weight g/1 piece
400	**ELA1/4EDCF**	109

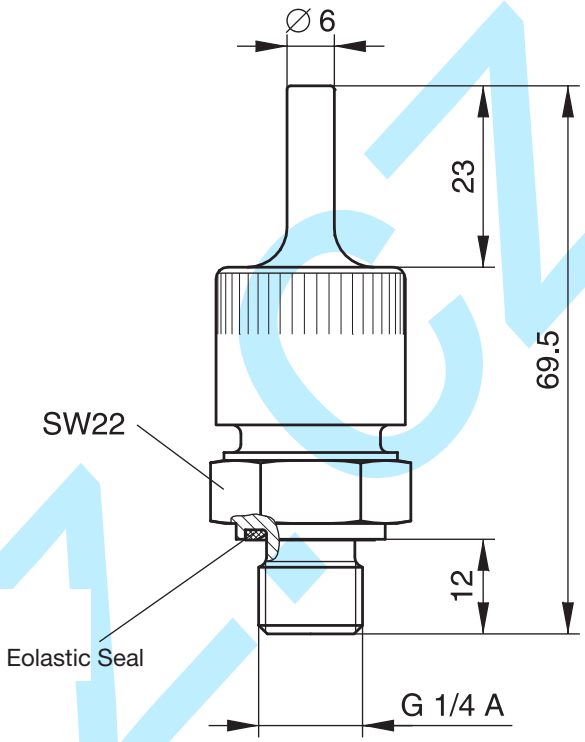

EO Swivel

PN (bar)	Dry Technology Steel	Weight g/1 piece
315	**ELAE10LCF**	125

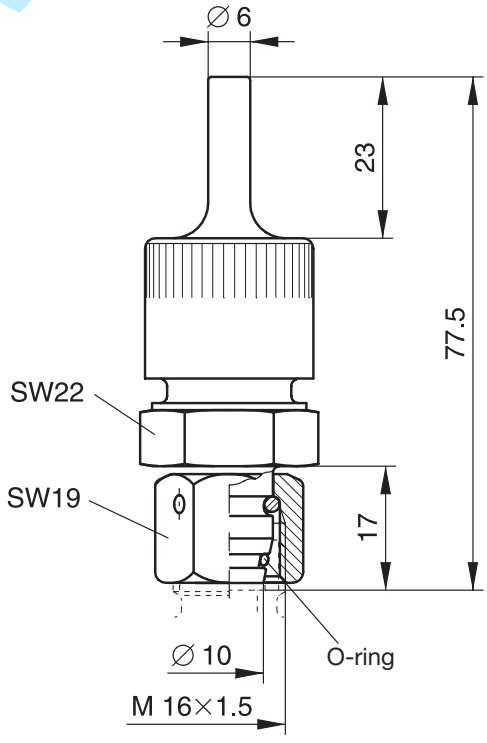

P

kovaz.cz

Dry Technology

Ermeto Original
Rotary fittings

Visual index EO rotary fittings

DG 101
p. Q6

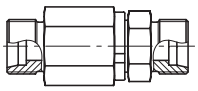

EO 24° cone end /
EO 24° cone end

DG 102-R
p. Q7

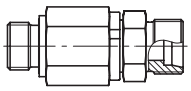

Male BSPP thread –
ED-seal (ISO 1179) / EO 24° cone end

DG 102-M
p. Q8

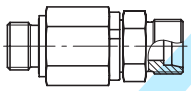

Male metric thread –
ED-seal (ISO 1179) / EO 24° cone end

DG 103
p. Q9

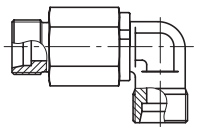

EO 24° cone end /
EO 24° cone end

DG 104-R
p. Q10

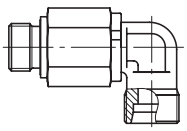

Male BSPP thread –
ED-seal (ISO 1179) / EO 24° cone end

DG 104-M
p. Q11

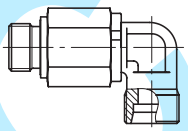

Male metric thread –
ED-seal (ISO 1179) / EO 24° cone end

DG 105
p. Q12

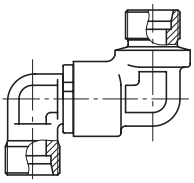

EO 24° cone end /
EO 24° cone end

DG 106-R
p. Q13

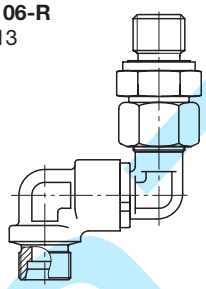

Male BSPP thread –
ED-seal (ISO 1179) / EO 24° cone end

DG 106-M
p. Q14

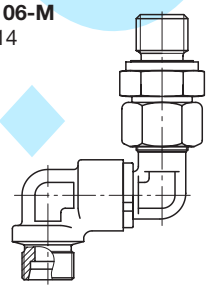

Male metric thread –
ED-seal (ISO 1179) / EO 24° cone end

DG 107
p. Q15

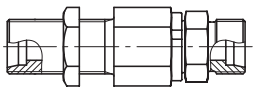

EO 24° cone end /
EO 24° cone end

DG 108
p. Q16

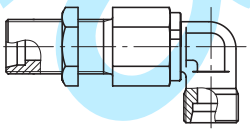

EO 24° cone end /
EO 24° cone end

DG 208
p. Q17

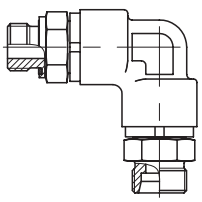

Male BSPP thread –
ED-seal (ISO 1179) / EO 24° cone end

DVGE-R
p. Q18

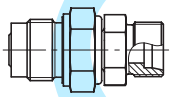

Male BSPP thread –
ED-seal / EO 24° cone end

DVGE-M
p. Q19

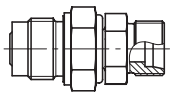

Male metric thread –
ED-seal / EO 24° cone end

DVWE-R
p. Q20

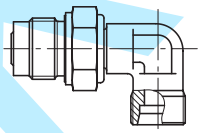

Male BSPP thread –
ED-seal / EO 24° cone end

DVWE-M
p. Q21

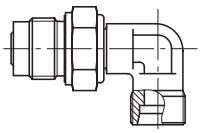

Male metric thread –
ED-seal / EO 24° cone end

kovoz.cz

DG Ball bearing rotary fittings

For working pressures up to 350 bar.
Favourable pressure/RPM ratio

Application:

Connecting a fixed point to a rotating, swinging or moving machine part via hoses.
To prevent torsion and to avoid small hose radius.

Flow media:

Hydraulic oils and lubricants on mineral oil base.
Also for hydraulic fluids HETG and HEES.
Not suitable for corrosive and HFC-fluids or gases.

Construction:

Compact, maintenance-free construction, service-proved. Combined ball and plain bearing with constant lubrication. Low starting torque. Wear-resistant annular piston sealings.

Materials:

Casing, body nut of steel, annular piston sealing: POM (e. g. Delrin)/FKM. Eolastic sealing: NBR (e.g. Perbunan), also available in FKM.

Surface:

Cr(VI)-free.

Nominal temperatures:

–14° C up to +80°C.

Warehousing:

Ball bearing rotary fittings can be stocked for 6 months. Warehousing up to 1 year is possible with storage conditions acc. to DIN 7716.

Perbunan = registered trademark of Bayer

Construction systems:

8 different versions with one rotational axis. Multiaxial rotary couplings on request. Tube connections according to DIN 2353, series S.
Maximum working pressure 350 bar (peak pressure)
Male stud sealing by Eolastic seals of NBR.
Male stud with metric parallel or BSPP thread.

Assembly instructions:

The life of a rotary fitting depends considerably on a stress-free line connection. Therefore the direct connection with tubes is to be avoided.
For connection of hoses the use of swivel nut fittings (DIN 3865) is recommended.
We recommend short, straight hose lines (free hose length approx. 5× hose O.D.). Thus shocks, vibrations etc. are absorbed.

Attention!
Maximum permissible flowrate of media: 5 m/s (see page C13).

Number of revolutions and starting torques:

Chart 1

Tube O.D.	DN Nominal diameter (mm)	Permissible number of revolutios (rpm.) under a working pressure of						Initial torque at 250 bar/Nm
		25 bar	64 bar	100 bar	160 bar	250 bar	350 bar	
6 8	5.0	1500	750	400	200	85	85	0.08
12 16	9.5	800	400	200	100	45	45	0.24
20 25	16.0	300	150	75	38	15	15	0.8
30 38	26.0	200	100	50	25	10	10	2.0

kovaz.cz

DG Ball bearing rotary fittings

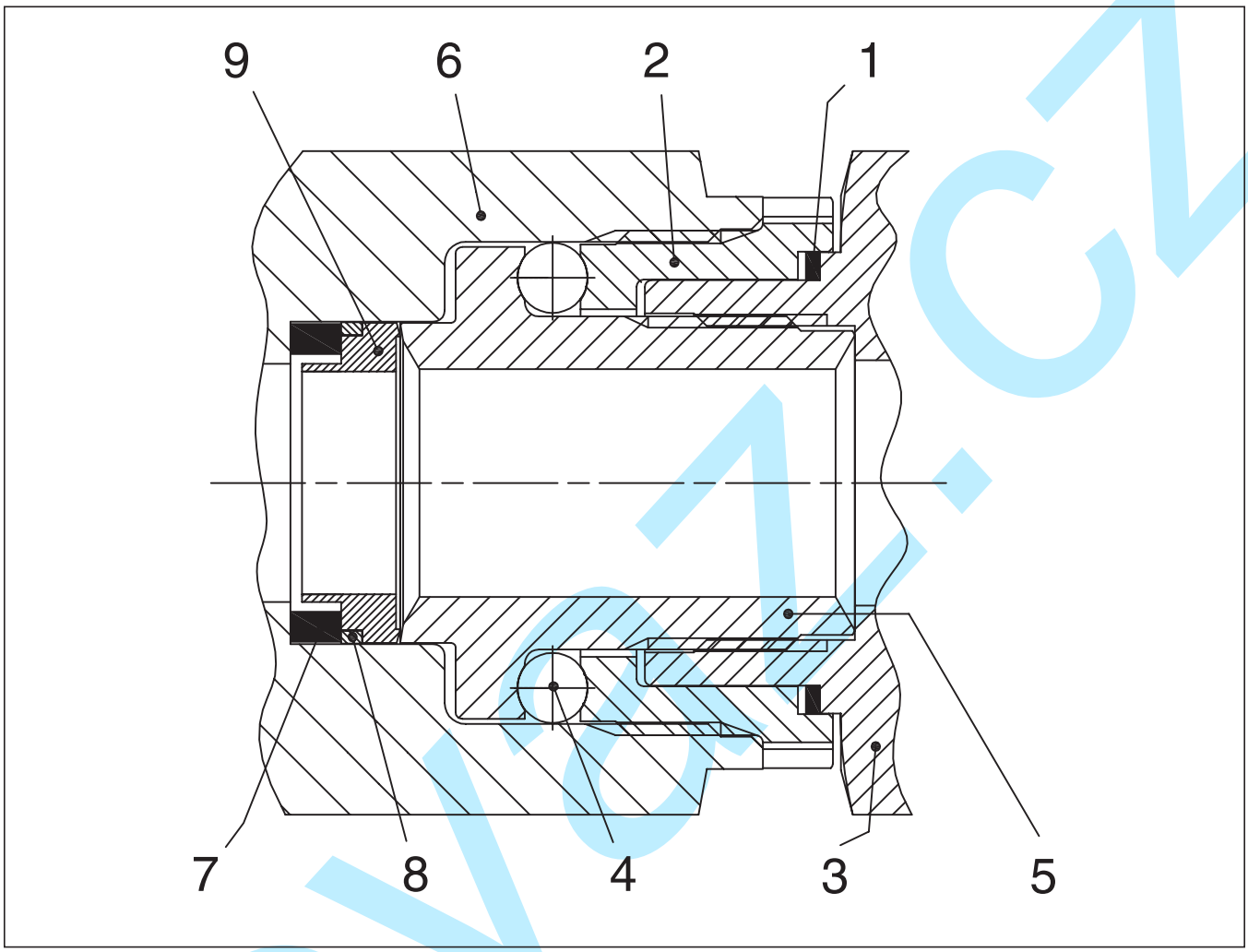

9	ring piston
8	intermediate ring
7	rubber spring
6	base
5	pivot
4	ball
3	top
2	raceway
1	dust seal
position	specification

KOVO1.CZ

Plain bearing rotary fittings

for slow rotating, swinging or moving machine parts up to 40 bar (series L) or up to 100 bar (series S).

Application:

Connecting a fixed point to a rotating, swinging or moving machine part via hoses.
To prevent torsion and to avoid small hose radius.

Flow media:

Hydraulic oils and lubricants on mineral oil base.
Also for hydraulic fluids HETG and HEES.
Not suitable for corrosive and HFC-fluids or gases.

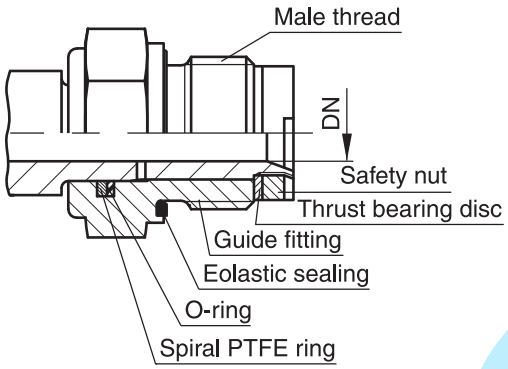

Construction:

Compact, maintenance-free construction, service-proved.

Materials:

Casing, body nut and progressive ring of steel. Sealing of NBR (Perbunan), on request of FKM.
Plain bearing rotary fittings are not available in stainless steel or brass.

Surface:

Cr(VI)-free.

Construction-system:

Series L, tube O. D. 6 to 35 mm, working pressure (PN): 40 bar
Series S, tube O. D. 6 to 38 mm, working pressure (PN): 100 bar
Tube connection according to DIN 2353, ISO 8434-1.
Male stud with metric thread and BSP thread.
Sealing of male stud by Eolastic-seals.

Perbunan = registered trademark of Bayer

Nominal temperature:

For sealings of NBR:
–35° C up to +100° C.
For sealings of FKM:
–25° C up to +120° C.

Tube O.D.				DN Nominal diameter mm
06L		06S		**4**
08L		08S		**5**
10L		10S		**6**
12L		12S		**8**
15L		14S	16S	**10**
18L	22L	20S	25S	**16**
28L	30S			**22**
35L	43L	38S		**25**

Number of revolutions:

Series					L				
Tube O.D.	6	8	10	12	15	18	22	28	35
Permiss. no. rpm	28	28	21	17	13	10	10	7	7
Series					S				
Tube O.D.	6	8	10	12	14	16	20	25	30	38
Permiss. no rpm	11	11	9	7	5	5	4	4	3	3

Assembly instruction:

The life of a rotary fitting depends considerably on a stress-free line connection. Therefore the direct connection with tubes is to be avoided.
For connection of hoses use of swivel nut connections (DIN 3865) is recommended.
We recommend short, straight hose lines (free hose length approx. 5x hose O. D.). Thus shocks, vibrations etc. are absorbed.

Q

kovaz.cz

DG 101 Straight ball bearing rotary union

EO 24° cone end / EO 24° cone end

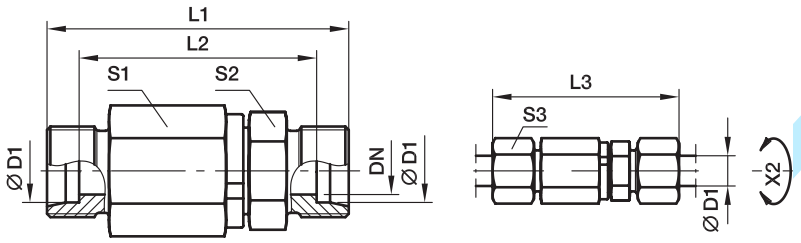

X2) Axis

Series	D1	DN	L1	L2	L3	S1	S2	S3	Weight g/1 piece	Order code*	CF[1])
S[4])	06	5.0	61	47	76	22.0	17	17.0	113	**DG101/06SOMD**	
	08	5.0	61	47	76	22.0	17	19.0	118	**DG101/08SOMD**	Pressure ratings see chart 1
	12	9.5	72	57	89	30.0	24	24.0	258	**DG101/12SOMD**	
	16	9.5	74	57	93	30.0	27	30.0	264	**DG101/16SOMD**	
	20	16.0	92	71	114	41.0	36	36.0	578	**DG101/20SOMD**	
	25	16.0	96	72	120	41.0	41	46.0	652	**DG101/25SOMD**	Pressure ratings see chart 1
	30	26.0	109	82	135	60.0	46	50.0	1321	**DG101/30SOMD**	
	38	26.0	114	82	143	60.0	55	60.0	1509	**DG101/38SOMD**	

[1]) Pressure shown = item deliverable

[4]) S = heavy series

$\frac{\text{PN (bar)}}{10}$ = PN (MPa)

Delivery without nut and ring. Information on ordering complete fittings or alternative sealing materials see page I7.

*Please add the **suffixes** below according to the material/ surface required.

Order code suffixes			
Material	Suffix surface and material	Example	Standard sealing material (no additonal. suffix needed)
Steel, zinc plated, Cr(VI)-free	CF	DG101/06SOMDCF	VIT

Kovaľ

DG 102-R Straight male stud ball bearing rotary union

Male BSPP thread – ED-seal (ISO 1179) / EO 24° cone end

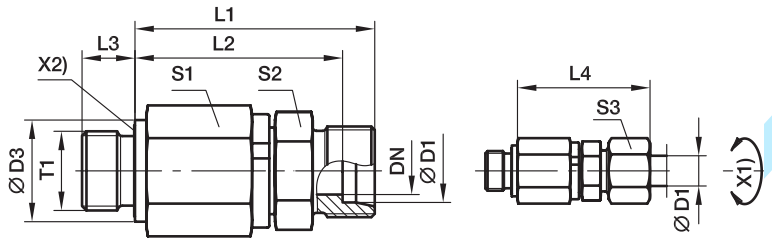

X1) Axis
X2) Eolastic-sealing

Series	D1	T1	DN	D3	L1	L2	L3	L4	S1	S2	S3	Weight g/1 piece	Order code*	CF[1])
S[4])	06	G 1/4 A	5.0	19	49	42.0	12	57.0	22	17	17	110	**DG102/06SROMD**	Pressure ratings see chart 1
	08	G 1/4 A	5.0	19	49	42.0	12	57.0	22	17	19	116	**DG102/08SROMD**	
	12	G 3/8 A	9.5	22	60	52.5	12	69.0	30	24	24	243	**DG102/12SROMD**	
	16	G 1/2 A	9.5	27	60	51.5	14	70.0	30	27	30	256	**DG102/16SROMD**	
	20	G 3/4 A	16.0	32	76	65.5	16	87.5	41	36	36	558	**DG102/20SROMD**	
	25	G 1 A	16.0	40	78	66.0	18	90.5	41	41	46	853	**DG102/25SROMD**	Pressure ratings see chart 1
	30	G 1 1/4 A	26.0	50	89	75.5	20	102.0	60	46	50	1312	**DG102/30SROMD**	
	38	G 1 1/2 A	26.0	55	92	76.0	22	107.0	60	55	60	1494	**DG102/38SROMD**	

[1]) Pressure shown = item deliverable

[4]) S = heavy series

$\frac{\text{PN (bar)}}{10}$ = PN (MPa)

Delivery without nut and ring. Information on ordering complete fittings or alternative sealing materials see page I7.

*Please add the **suffixes** below according to the material/ surface required.

Order code suffixes			
Material	Suffix surface and material	Example	Standard sealing material (no additonal. suffix needed)
Steel, zinc plated, Cr(VI)-free	CF	DG102/06SROMDCF	VIT/NBR

kovaz

DG 102-M Straight male stud ball bearing rotary union

Male metric thread – ED-seal (ISO 9974) / EO 24° cone end

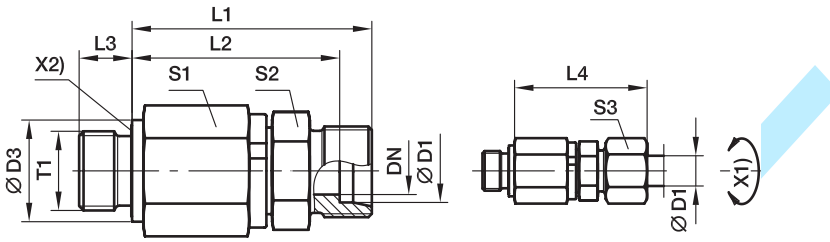

X1) Axis
X2) Eolastic-sealing

Series	D1	T1	DN	D3	L1	L2	L3	L4	S1	S2	S3	Weight g/1 piece	Order code*	CF[1])
S[4])	06	M 14×1.5	5.0	19	49	42.0	12	57.0	22	17	17	112	**DG102/06SMOMD**	
	08	M 14×1.5	5.0	19	49	42.0	12	57.0	22	17	19	113	**DG102/08SMOMD**	Pressure ratings see chart 1
	12	M 18×1.5	9.5	24	60	52.5	12	69.0	30	24	24	245	**DG102/12SMOMD**	
	16	M 22×1.5	9.5	27	60	51.5	14	70.0	30	27	30	259	**DG102/16SMOMD**	
	20	M 27×2.0	16.0	32	76	65.5	16	87.5	41	36	36	558	**DG102/20SMOMD**	
	25	M 33×2.0	16.0	40	78	66.0	18	90.5	41	41	46	637	**DG102/25SMOMD**	Pressure ratings see chart 1
	30	M 42×2.0	26.0	50	89	75.5	20	102.0	60	46	50	1316	**DG102/30SMOMD**	
	38	M 48×2.0	26.0	55	92	76.0	22	107.0	60	55	60	1491	**DG102/38SMOMD**	

[1]) Pressure shown = item deliverable

[4]) S = heavy series

$\frac{PN\ (bar)}{10}$ = PN (MPa)

Delivery without nut and ring. Information on ordering complete fittings or alternative sealing materials see page I7.

*Please add the **suffixes** below according to the material/ surface required.

Order code suffixes			
Material	Suffix surface and material	Example	Standard sealing material (no additonal. suffix needed)
Steel, zinc plated, Cr(VI)-free	CF	DG102/06SMOMDCF	VIT/NBR

DG 103 Elbow ball bearing rotary union

EO 24° cone end / EO 24° cone end

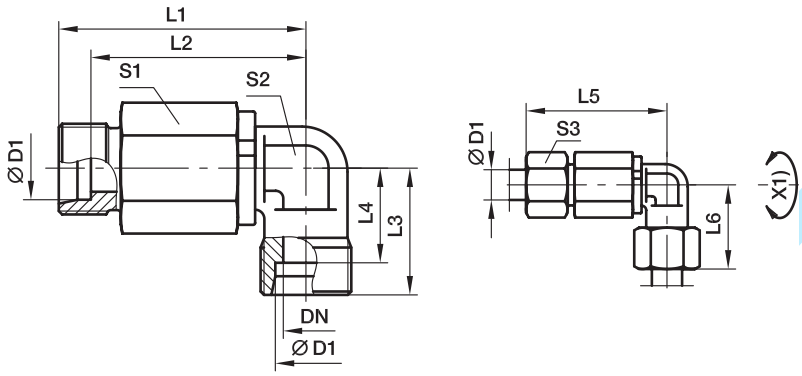

X2) Axis

Series	D1	DN	L1	L2	L3	L4	L5	L6	S1	S2	S3	Weight g/1 piece	Order code*	CF[1])
S[4])	06	5.0	51.5	59.0	23	16.0	44.5	16.0	22	17	17	134	**DG103/06SOMD**	
	08	5.0	51.5	59.0	24	17.0	44.5	17.0	22	17	19	141	**DG103/08SOMD**	Pressure ratings see chart 1
	12	9.5	63.0	72.0	29	21.5	55.5	21.5	30	22	24	296	**DG103/12SOMD**	
	16	9.5	63.0	73.0	33	24.5	54.5	24.5	30	22	30	298	**DG103/16SOMD**	
	20	16.0	83.0	94.5	37	26.5	72.5	26.5	41	36	36	772	**DG103/20SOMD**	
	25	16.0	83.0	95.5	42	30.0	71.0	30.0	41	36	46	803	**DG103/25SOMD**	Pressure ratings see chart 1
	30	26.0	102.5	116.0	49	35.5	89.0	35.5	60	50	50	1722	**DG103/30SOMD**	
	38	26.0	102.5	117.0	57	41.0	86.5	41.0	60	50	60	1931	**DG103/38SOMD**	

[1]) Pressure shown = item deliverable

[4]) S = heavy series

$\frac{\text{PN (bar)}}{10}$ = PN (MPa)

Delivery without nut and ring. Information on ordering complete fittings or alternative sealing materials see page I7.

*Please add the **suffixes** below according to the material/ surface required.

Order code suffixes			
Material	Suffix surface and material	Example	Standard sealing material (no additonal. suffix needed)
Steel, zinc plated, Cr(VI)-free	CF	DG103/06SOMDCF	VIT

Kovai

DG 104-R Elbow male stud ball bearing rotary union

Male BSPP thread – ED-seal (ISO 1179) / EO 24° cone end

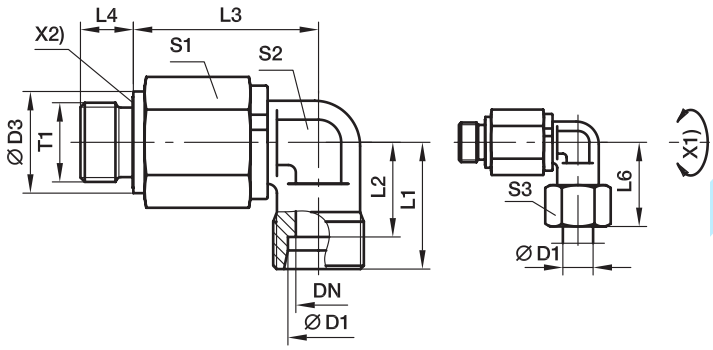

X1) Axis
X2) Eolastic-sealing

Series	D1	T1	DN	D3	L1	L2	L3	L4	L6	S1	S2	S3	Weight g/1 piece	Order code*	CF[1])
S[4])	06	G 1/4 A	05	19	23	16.0	39.5	12	31	22	17	17	131	**DG104/06SROMD**	
	08	G 1/4 A	05	19	24	17.0	39.5	12	32	22	17	19	135	**DG104/08SROMD**	Pressure ratings see chart 1
	12	G 3/8 A	10	22	29	21.5	51.0	12	38	30	22	24	284	**DG104/12SROMD**	
	16	G 1/2 A	10	27	33	24.5	49.0	14	43	30	22	30	284	**DG104/16SROMD**	
	20	G 3/4 A	16	32	37	26.5	67.0	16	48	41	36	36	752	**DG104/20SROMD**	
	25	G 1 A	16	40	42	30.0	65.0	18	54	41	36	46	789	**DG104/25SROMD**	Pressure ratings see chart 1
	30	G 1 1/4 A	26	50	49	35.5	82.5	20	62	60	50	50	1713	**DG104/30SROMD**	
	38	G 1 1/2 A	26	55	57	41.0	80.5	22	72	60	50	60	1915	**DG104/38SROMD**	

[1]) Pressure shown = item deliverable

[4]) S = heavy series

$\frac{\text{PN (bar)}}{10}$ = PN (MPa)

Delivery without nut and ring. Information on ordering complete fittings or alternative sealing materials see page I7.

*Please add the **suffixes** below according to the material/ surface required.

Order code suffixes			
Material	Suffix surface and material	Example	Standard sealing material (no additonal. suffix needed)
Steel, zinc plated, Cr(VI)-free	CF	DG104/06SROMDCF	VIT/NBR

DG 104-M Elbow male stud ball bearing rotary union

Male metric thread – ED-seal (ISO 9974) / EO 24° cone end

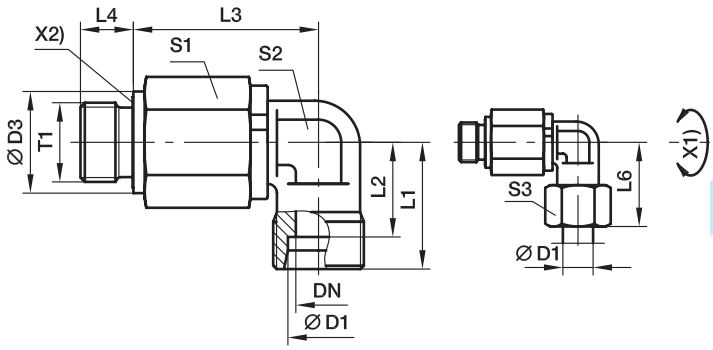

X1) Axis
X2) Eolastic-sealing

Series	D1	T1	DN	D3	L1	L2	L3	L4	L6	S1	S2	S3	Weight g/1 piece	Order code*	CF[1])
S[4])	06	M 14×1.5	05	19	23	16.0	39.5	12	31	22	17	17	132	**DG104/06SMOMD**	
	08	M 14×1.5	05	19	24	17.0	39.5	12	32	22	17	19	136	**DG104/08SMOMD**	Pressure ratings see chart 1
	12	M 18×1.5	10	22	29	21.5	51.0	12	38	30	22	24	286	**DG104/12SMOMD**	
	16	M 22×1.5	10	27	33	24.5	49.0	14	43	30	22	30	287	**DG104/16SMOMD**	
	20	M 27×2.0	16	32	37	26.5	67.0	16	48	41	36	36	752	**DG104/20SMOMD**	
	25	M 33×2.0	16	40	42	30.0	65.0	18	54	41	36	46	788	**DG104/25SMOMD**	Pressure ratings see chart 1
	30	M 42×2.0	26	50	49	35.5	82.5	20	62	60	50	50	1717	**DG104/30SMOMD**	
	38	M 48×2.0	26	55	57	41.0	80.5	22	72	60	50	60	1913	**DG104/38SMOMD**	

[1]) Pressure shown = item deliverable

[4]) S = heavy series

$\frac{\text{PN (bar)}}{10}$ = PN (MPa)

Delivery without nut and ring. Information on ordering complete fittings or alternative sealing materials see page I7.

*Please add the **suffixes** below according to the material/ surface required.

Order code suffixes			
Material	Suffix surface and material	Example	Standard sealing material (no additonal. suffix needed)
Steel, zinc plated, Cr(VI)-free	CF	DG104/06SMOMDCF	VIT/NBR

Kovai

DG 105 Double elbow ball bearing rotary union

EO 24° cone end / EO 24° cone end

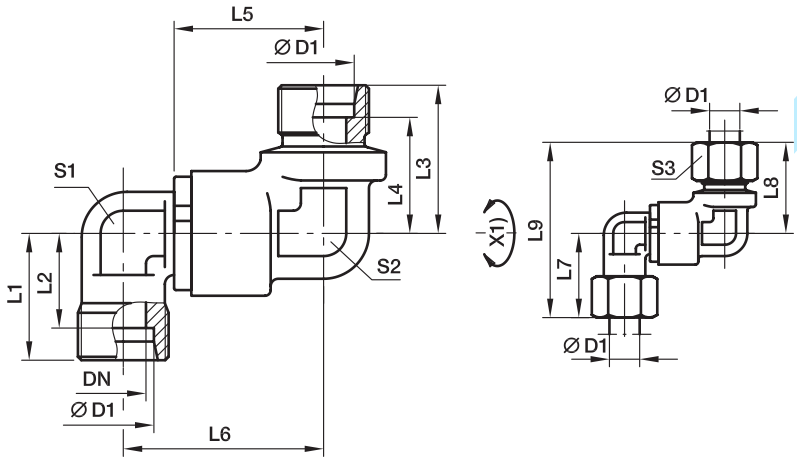

X1) Axis

Series	D1	DN	L1	L2	L3	L4	L5	L6	L7	L8	L9	S1	S2	S3	Weight g/1 piece	Order code*	CF[1])
S[4])	12	9.5	39.5	26.5	43	21.5	38	81	53.0	24	22	24	29	50.5	384	**DG105/12SOMD**	Pressure ratings see chart 1
	16	9.5	39.5	25.5	44	24.5	43	87	53.0	30	22	24	33	52.5	377	**DG105/16SOMD**	
	20	16.0	56.5	39.5	61	26.5	48	109	76.0	36	36	32	37	71.5	1015	**DG105/20SOMD**	
	25	16.0	56.5	38.0	62	30.0	54	116	76.0	46	36	32	42	74.0	1034	**DG105/25SOMD**	
	30	26.0	65.0	44.5	71	35.5	62	133	92.5	50	50	50	49	84.5	2344	**DG105/30SOMD**	
	38	26.0	65.0	42.0	73	41.0	72	145	92.5	60	50	50	57	89.0	2485	**DG105/38SOMD**	

[1]) Pressure shown = item deliverable

[4]) S = heavy series

$\frac{\text{PN (bar)}}{10}$ = PN (MPa)

Delivery without nut and ring. Information on ordering complete fittings or alternative sealing materials see page I7.

*Please add the **suffixes** below according to the material/ surface required.

Order code suffixes			
Material	Suffix surface and material	Example	Standard sealing material (no additonal. suffix needed)
Steel, zinc plated, Cr(VI)-free	CF	DG105/12SOMDCF	VIT

DG 106-R Double elbow male stud ball bearing rotary union

Male BSPP thread – ED-seal (ISO 1179) / EO 24° cone end
(Adjustable at male thread axis, consisting of DG105 + EGE)

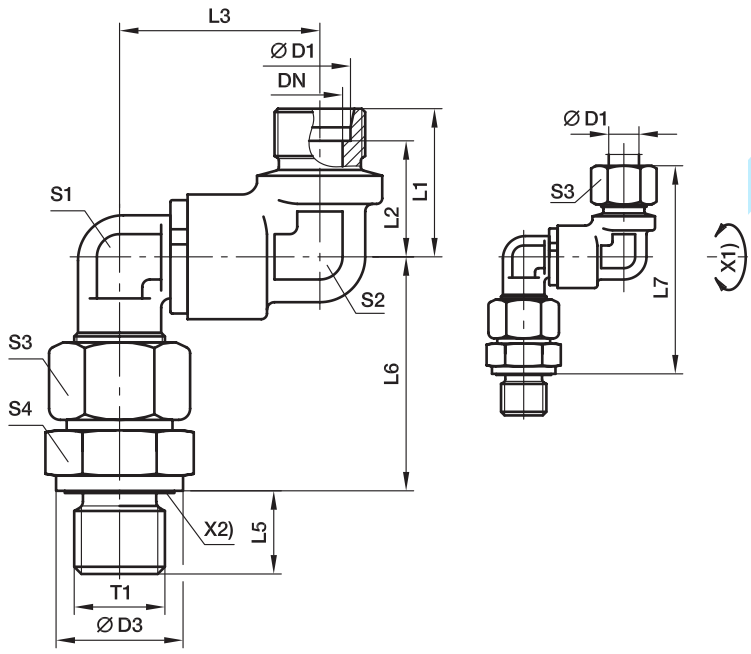

X1) Axis
X2) Eolastic-sealing

Series	D1	T1	DN	D3	L1	L2	L3	L5	L6	L7	S1	S2	S3	S4	Weight g/1 piece	Order code*	CF[1)]
S[4)]	12	G 3/8 A	9.5	24	34	26.5	53.0	12	55.5	99	24	22	24	22	484	**DG106/12SROMD**	Pressure ratings see chart 1
	16	G 1/2 A	9.5	27	34	25.5	53.0	14	61.5	105	24	24	30	27	547	**DG106/16SROMD**	
	20	G 3/4 A	16.0	32	50	39.5	76.0	16	69.5	131	36	32	36	32	1288	**DG106/20SROMD**	
	25	G 1 A	16.0	40	50	38.0	76.0	18	78.0	140	36	32	46	41	1528	**DG106/25SROMD**	
	30	G 1 1/4 A	26.0	50	58	44.5	92.5	20	86.5	158	50	50	50	50	3004	**DG106/30SROMD**	
	38	G 1 1/2 A	26.0	55	58	42.0	92.5	22	101.0	174	50	50	60	55	3419	**DG106/38SROMD**	

[1)] Pressure shown = item deliverable

[4)] S = heavy series

$\frac{\text{PN (bar)}}{10}$ = PN (MPa)

Delivery without nut and ring. Information on ordering complete fittings or alternative sealing materials see page I7.

*Please add the **suffixes** below according to the material/ surface required.

Order code suffixes			
Material	Suffix surface and material	Example	Standard sealing material (no additonal. suffix needed)
Steel, zinc plated, Cr(VI)-free	CF	DG106/06SROMDCF	VIT/NBR

DG 106-M Double elbow male stud ball bearing rotary union

Male metric thread – ED-seal (ISO 9974) / EO 24° cone end
(Adjustable at male thread axis, consisting of DG105 + EGE)

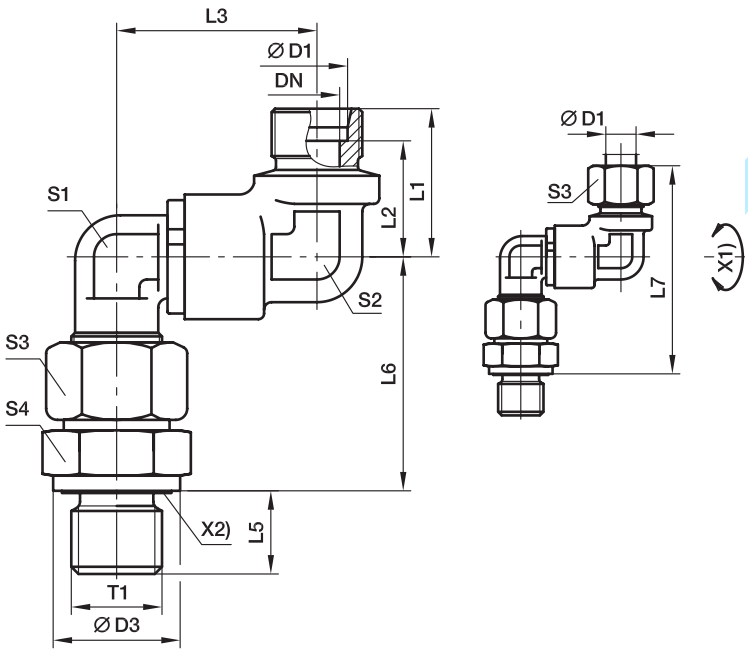

X1) Axis
X2) Eolastic-sealing

Series	D1	T1	DN	D3	L1	L2	L3	L5	L6	L7	S1	S2	S3	S4	Weight g/1 piece	Order code*	CF[1)]
S[4)]	12	M 18×1.5	5.0	24	34	26.5	53.0	12	55.5	99	24	22	24	24	495	**DG106/12SMOMD**	Pressure ratings see chart 1
	16	M 22×1.5	9.5	27	34	25.5	53.0	14	61.5	105	24	24	30	27	551	**DG106/16SMOMD**	
	20	M 27×2.0	16.0	32	50	39.5	76.0	16	69.5	131	36	32	36	32	1289	**DG106/20SMOMD**	
	25	M 33×2.0	16.0	40	50	38.0	76.0	18	78.0	140	36	32	46	41	1532	**DG106/25SMOMD**	
	30	M 42×2.0	26.0	50	58	44.5	92.5	20	86.5	158	50	50	50	50	3007	**DG106/30SMOMD**	
	38	M 48×2.0	26.0	55	58	42.0	92.5	22	101.0	174	50	50	60	55	3441	**DG106/38SMOMD**	

[1)] Pressure shown = item deliverable

[4)] S = heavy series

$\frac{\text{PN (bar)}}{10}$ = PN (MPa)

Delivery without nut and ring. Information on ordering complete fittings or alternative sealing materials see page I7.

*Please add the **suffixes** below according to the material/ surface required.

Order code suffixes			
Material	Suffix surface and material	Example	Standard sealing material (no additonal. suffix needed)
Steel, zinc plated, Cr(VI)-free	CF	DG106/06SMOMDCF	VIT/NBR

DG 107 Straight bulkhead ball bearing rotary union

EO 24° cone end / EO 24° cone end

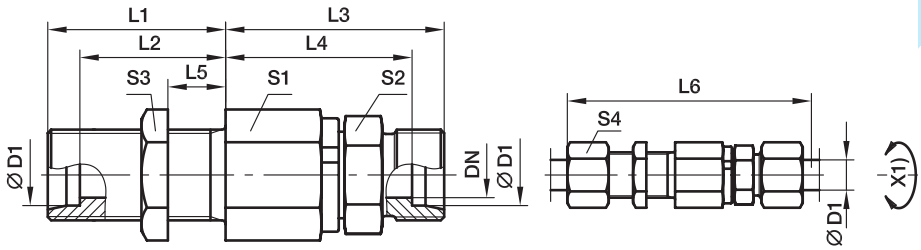

X1) Axis

Series	D1	DN	T1	L1	L2	L3	L4	L5	L6	S1	S2	S3	S4	Weight g/1 piece	Order code*	CF[1])
S[4])	06	5.0	M 14×1.5	23	16.0	49	42.0	5	87	22	17	19	17	134	**DG107/06SOMD**	
	08	5.0	M 16×1.5	23	16.0	49	42.0	5	87	22	17	22	19	143	**DG107/08SOMD**	Pressure ratings see chart 1
	12	9.5	M 20×1.5	23	15.5	60	52.5	5	100	30	24	27	24	291	**DG107/12SOMD**	
	16	9.5	M 24×1.5	26	17.5	60	51.5	5	105	30	27	32	30	328	**DG107/16SOMD**	
	20	16.0	M 30×2.0	39	28.5	76	65.5	15	137	41	36	41	36	710	**DG107/20SOMD**	
	25	16.0	M 36×2.0	42	30.0	78	66.0	15	144	41	41	46	46	847	**DG107/25SOMD**	Pressure ratings see chart 1
	30	26.0	M 42×2.0	44	30.5	89	75.5	15	159	60	46	50	50	1533	**DG107/30SOMD**	
	38	26.0	M 52×2.0	47	31.0	92	76.0	15	168	60	55	65	60	1930	**DG107/38SOMD**	

[1]) Pressure shown = item deliverable

[4]) S = heavy series

$\frac{\text{PN (bar)}}{10}$ = PN (MPa)

Delivery without nut and ring. Information on ordering complete fittings or alternative sealing materials see page I7.

*Please add the **suffixes** below according to the material/ surface required.

Order code suffixes			
Material	Suffix surface and material	Example	Standard sealing material (no additonal. suffix needed)
Steel, zinc plated, Cr(VI)-free	CF	DG107/06SOMDCF	VIT

DG 108 Elbow bulkhead ball bearing rotary union

EO 24° cone end / EO 24° cone end

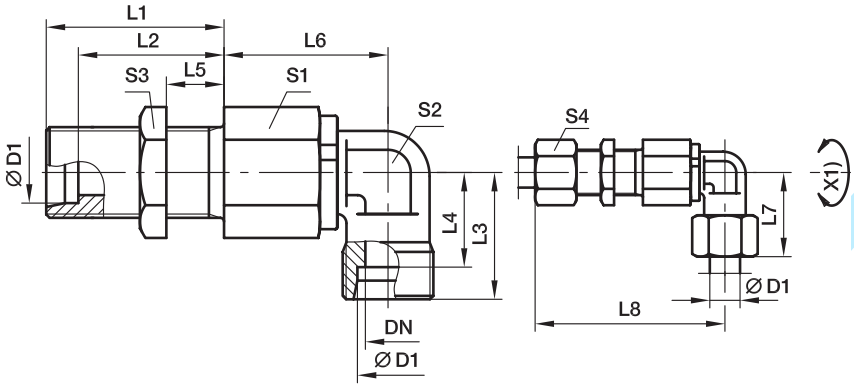

X1) Axis

Series	D1	DN	T1	L1	L2	L3	L4	L5	L6	L7	L8	S1	S2	S3	S4	Weight g/1 piece	Order code*	CF[1])
S[4])	06	5.0	M 14×1.5	23	16.0	23	16.0	5	39.5	31	70.0	22	17	19	17	154	**DG108/06SOMD**	
	08	5.0	M 16×1.5	23	16.0	23	17.0	5	39.5	32	70.0	22	17	22	19	166	**DG108/08SOMD**	Pressure ratings see chart 1
	12	9.5	M 20×1.5	23	15.5	29	21.5	5	51.0	38	83.0	30	22	27	24	333	**DG108/12SOMD**	
	16	9.5	M 24×1.5	26	17.5	33	24.5	5	49.0	43	85.0	30	22	32	30	354	**DG108/16SOMD**	
	20	16.0	M 30×2.0	39	28.5	37	26.5	15	67.0	48	117.5	41	36	41	36	904	**DG108/20SOMD**	
	25	16.0	M 36×2.0	42	30.0	42	30.0	15	65.0	54	119.5	41	36	46	46	999	**DG108/25SOMD**	Pressure ratings see chart 1
	30	26.0	M 42×2.0	44	30.5	49	35.5	15	82.5	62	140.0	60	50	50	50	1935	**DG108/30SOMD**	
	38	26.0	M 52×2.0	47	31.0	57	41.0	15	80.5	72	142.0	60	50	65	60	2351	**DG108/38SOMD**	

[1]) Pressure shown = item deliverable

[4]) S = heavy series

$\frac{\text{PN (bar)}}{10}$ = PN (MPa)

Delivery without nut and ring. Information on ordering complete fittings or alternative sealing materials see page I7.

*Please add the **suffixes** below according to the material/ surface required.

Order code suffixes			
Material	Suffix surface and material	Example	Standard sealing material (no additonal. suffix needed)
Steel, zinc plated, Cr(VI)-free	CF	DG108/06SOMDCF	VIT

DG 208-R Double elbow male stud ball bearing rotary union

Male BSPP thread – ED-seal (ISO 1179) / EO 24° cone end

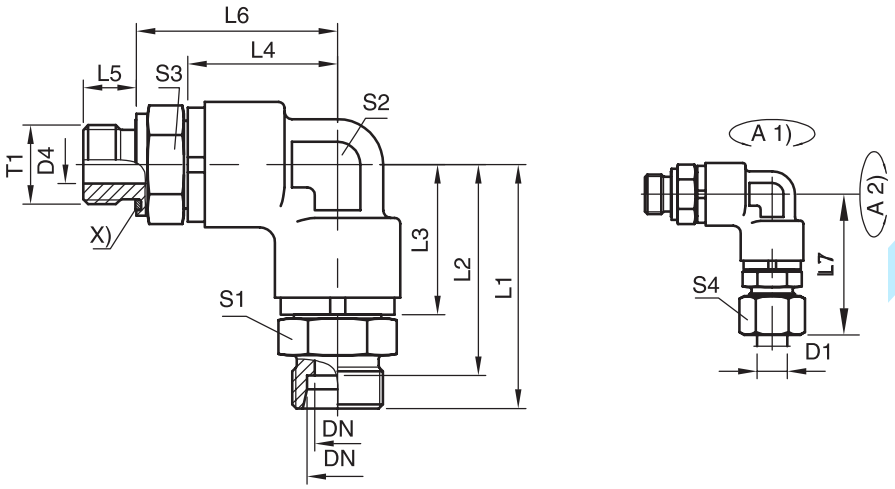

Series	D1	T1	DN	L1	L2	L3	L4	L5	L6	L7	S1	S2	S3	S4	Order code*	CF[1])
S[4])	12	G 3/8 A	8	61.8	54.3	39.8	39.8	12	52.5	70.3	24	24	24	24	**DG208/12SROMD**	Pressure ratings see chart 1
	16	G 1/2 A	12	64.5	56.5	39.8	39.8	14	53.0	73.5	27	24	27	30	**DG208/16SROMD**	
	20	G 3/4 A	16	84.5	74.5	56.5	56.5	16	71.5	95.5	36	32	36	36	**DG208/20SROMD**	
	25	G 1 A	16	89.5	77.5	56.5	56.5	18	74.5	100.5	41	32	41	46	**DG208/25SROMD**	
	38	G 1 1/2 A	32	104.0	88.0	65.3	65.3	22	85.3	121.5	55	50	55	60	**DG208/38SROMD**	

[1]) Pressure shown = item deliverable

[4]) S = heavy series

$\frac{PN\ (bar)}{10}$ = PN (MPa)

Delivery without nut and ring. Information on ordering complete fittings or alternative sealing materials see page I7.

*Please add the **suffixes** below according to the material/ surface required.

Order code suffixes			
Material	Suffix surface and material	Example	Standard sealing material (no additonal. suffix needed)
Steel, zinc plated, Cr(VI)-free	CF	DG208/12SROMDCF	VIT

kovaz

DVGE-R Straight male stud plain bearing rotary union

Male BSPP thread – ED-seal / EO 24° cone end

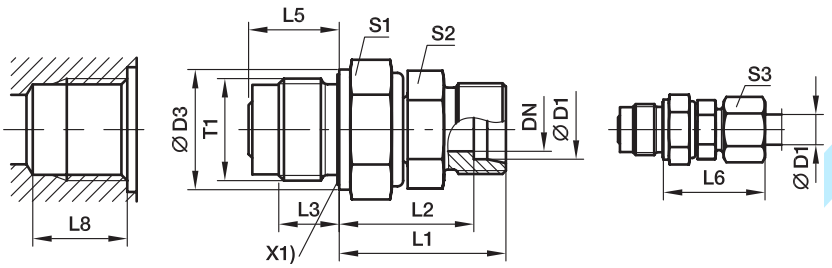

X1) Eolastic-sealing

L8 larger than DIN 3852
chart page Q22

Series	D1	T1	DN	D3	L1	L2	L3	L5	L6	S1	S2	S3	Weight g/1 piece	Order code*	PN (bar)[1] CF	PN (bar)[1] VIT
L[3])	06	G 1/4 A	4.0	19	28.0	21.0	12	18.0	40	19	12	14	43	**DVGE06LROMD**	40	40
	08	G 1/4 A	5.0	19	28.0	21.0	12	18.0	40	19	14	17	44	**DVGE08LROMD**	40	40
	10	G 3/8 A	6.0	22	32.0	25.0	12	18.0	40	24	17	19	74	**DVGE10LROMD**	40	40
	12	G 1/2 A	8.0	27	34.0	27.0	14	21.0	42	27	19	22	116	**DVGE12LROMD**	40	40
	15	G 3/4 A	10.0	32	39.0	32.0	16	24.0	47	32	24	27	214	**DVGE15LROMD**	40	40
	18	G 1 A	16.0	40	42.5	35.0	18	27.5	51	41	27	32	337	**DVGE18LROMD**	40	40
	22	G 1 A	16.0	40	46.5	39.0	18	27.5	55	41	32	36	376	**DVGE22LROMD**	40	40
	28	G 1 1/4 A	22.0	50	48.0	40.5	20	31.0	57	50	41	41	586	**DVGE28LROMD**	40	40
	35	G 1 1/2 A	25.0	55	55.0	44.5	22	35.0	66	55	46	50	868	**DVGE35LROMD**	40	40
S[4])	06	G 1/4 A	4.0	19	30.0	23.0	12	18.0	38	19	14	17	50	**DVGE06SROMD**	100	100
	08	G 1/4 A	5.0	19	31.0	24.0	12	18.0	39	19	17	19	55	**DVGE08SROMD**	100	100
	10	G 3/8 A	6.0	22	34.0	26.5	12	18.0	43	24	19	22	85	**DVGE10SROMD**	100	100
	12	G 1/2 A	8.0	27	36.0	28.5	14	21.0	45	27	22	24	134	**DVGE12SROMD**	100	100
	14	G 3/4 A	10.0	32	41.0	33.0	16	24.0	51	32	24	27	220	**DVGE14SROMD**	100	100
	16	G 3/4 A	10.0	32	42.0	33.5	16	24.0	52	32	27	30	230	**DVGE16SROMD**	100	100
	20	G 1 A	16.0	40	48.5	38.0	18	27.5	60	41	32	36	385	**DVGE20SROMD**	100	100
	25	G 1 A	16.0	40	52.5	40.5	18	27.5	65	41	41	46	483	**DVGE25SROMD**	100	100
	30	G 1 1/4 A	22.0	50	55.0	41.5	20	31.0	68	50	46	50	691	**DVGE30SROMD**	100	100
	38	G 1 1/2 A	25.0	55	63.0	47.0	22	35.0	78	55	55	60	1080	**DVGE38SROMD**	100	100

[1]) Pressure shown = item deliverable

[3]) L = light series; [4]) S = heavy series

$\frac{\text{PN (bar)}}{10}$ = PN (MPa)

Delivery without nut and ring. Information on ordering complete fittings or alternative sealing materials see page I7.

*Please add the **suffixes** below according to the material/ surface required.

Order code suffixes			
Material	Suffix surface and material	Example	Standard sealing material (no additonal. suffix needed)
Steel, zinc plated, Cr(VI)-free	CF	DVGE06LROMDCF	NBR
FKM	VITCF	DVGE06LROMDVITCF	

DVGE-M Straight male stud plain bearing rotary union

Male metric thread – ED-seal / EO 24° cone end

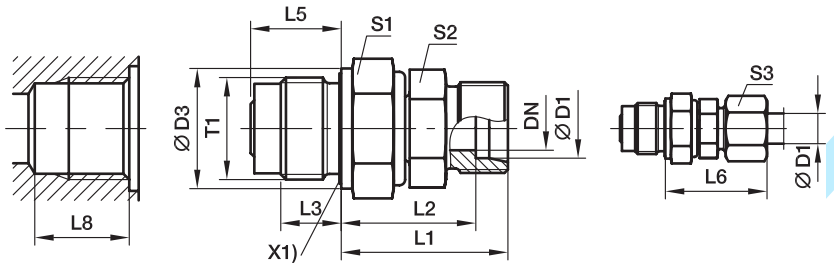

X1) Eolastic-sealing

L8 larger than DIN 3852
chart page Q22

Series	D1	T1	DN	D3	L1	L2	L3	L5	L6	S1	S2	S3	Weight g/1 piece	Order code*	PN (bar)[1] CF	PN (bar)[1] VIT
L[3])	06	M 14×1.5	4.0	19	27.0	20.0	12	18.0	27	19	12	14	44	**DVGE06LMOMD**	40	40
	08	M 14×1.5	5.0	19	28.0	21.0	12	18.0	29	19	12	17	45	**DVGE08LMOMD**	40	40
	10	M 18×1.5	6.0	24	33.0	26.0	12	18.0	30	24	14	19	87	**DVGE10LMOMD**	40	40
	12	M 22×1.5	8.0	27	34.0	27.0	14	21.0	32	27	17	22	120	**DVGE12LMOMD**	40	40
	15	M 27×2.0	10.0	32	40.0	33.0	16	24.0	36	32	19	27	215	**DVGE15LMOMD**	40	40
	18	M 33×2.0	16.0	40	45.0	37.5	18	27.5	40	41	27	32	349	**DVGE18LMOMD**	40	40
	22	M 33×2.0	16.0	40	47.0	39.5	18	27.5	44	41	27	36	383	**DVGE22LMOMD**	40	40
	28	M 42×2.0	22.0	50	51.5	44.0	20	31.0	47	50	36	41	590	**DVGE28LMOMD**	40	40
	35	M 48×2.0	25.0	55	64.5	54.0	22	35.0	56	55	41	50	876	**DVGE35LMOMD**	40	40
S[4])	06	M 14×1.5	4.0	19	28.0	21.0	12	18.0	31	19	12	17	51	**DVGE06SMOMD**	100	100
	08	M 14×1.5	5.0	19	29.0	22.0	12	18.0	32	19	14	19	56	**DVGE08SMOMD**	100	100
	10	M 18×1.5	6.0	24	34.5	27.0	12	18.0	34	24	17	22	98	**DVGE10SMOMD**	100	100
	12	M 22×1.5	8.0	27	35.5	28.0	14	21.0	38	27	17	24	139	**DVGE12SMOMD**	100	100
	16	M 27×2.0	10.0	32	42.5	34.0	16	24.0	43	32	24	30	239	**DVGE16SMOMD**	100	100
	20	M 33×2.0	16.0	40	50.0	39.5	18	27.5	48	41	27	36	385	**DVGE20SMOMD**	100	100
	25	M 33×2.0	16.0	40	54.5	42.5	18	27.5	54	41	36	46	494	**DVGE25SMOMD**	100	100
	30	M 42×2.0	22.0	50	61.5	48.0	20	31.0	62	50	41	50	695	**DVGE30SMOMD**	100	100
	38	M 48×2.0	25.0	55	71.0	55.0	22	35.0	72	55	50	60	1088	**DVGE38SMOMD**	100	100

[1]) Pressure shown = item deliverable

[3]) L = light series; [4]) S = heavy series

$$\frac{\text{PN (bar)}}{10} = \text{PN (MPa)}$$

Delivery without nut and ring. Information on ordering complete fittings or alternative sealing materials see page I7.

*Please add the **suffixes** below according to the material/ surface required.

Order code suffixes			
Material	Suffix surface and material	Example	Standard sealing material (no additonal. suffix needed)
Steel, zinc plated, Cr(VI)-free	CF	DVGE06LMOMDCF	NBR
FKM	VITCF	DVGE06LMOMDVITCF	

DVWE-R Elbow male stud plain bearing rotary union

Male BSPP thread – ED-seal / EO 24° cone end

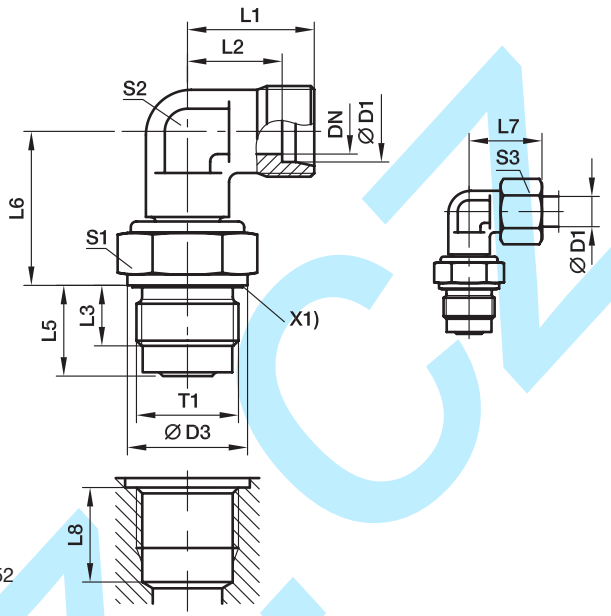

X1) Eolastic-sealing

L8 larger than DIN 3852
chart page Q22

Series	D1	T1	DN	D3	L1	L2	L3	L5	L6	L7	S1	S2	S3	Weight g/1 piece	Order code*	PN (bar)[1] CF	PN (bar)[1] VIT
L[3]	06	G 1/4 A	4	19	19	12.0	12	18.0	20.0	27	19	12	14	50	**DVWE06LROMD**	40	40
	08	G 1/4 A	5	19	21	14.0	12	18.0	21.0	29	19	12	17	50	**DVWE08LROMD**	40	40
	10	G 3/8 A	6	22	22	15.0	12	18.0	26.0	30	24	14	19	83	**DVWE10LROMD**	40	40
	12	G 1/2 A	8	27	24	17.0	14	21.0	27.0	32	27	17	22	129	**DVWE12LROMD**	40	40
	15	G 3/4 A	10	32	28	21.0	16	24.0	33.0	36	32	19	27	232	**DVWE15LROMD**	40	40
	18	G 1 A	16	40	31	23.5	18	27.5	37.5	40	41	27	32	393	**DVWE18LROMD**	40	40
	22	G 1 A	16	40	35	27.5	18	27.5	39.5	44	41	27	36	406	**DVWE22LROMD**	40	40
	28	G 1 1/4 A	22	50	38	30.5	20	31.0	44.0	47	50	36	41	664	**DVWE28LROMD**	40	40
	35	G 1 1/2 A	25	55	45	34.5	22	35.0	54.0	56	55	41	50	1005	**DVWE35LROMD**	40	40
S[4]	06	G 1/4 A	4	19	23	16.0	12	18.0	21.0	31	19	12	17	58	**DVWE06SROMD**	100	100
	08	G 1/4 A	5	19	24	17.0	12	18.0	22.0	32	19	14	19	65	**DVWE08SROMD**	100	100
	10	G 3/8 A	6	22	25	17.5	12	18.0	27.0	34	24	17	22	103	**DVWE10SROMD**	100	100
	12	G 1/2 A	8	27	29	21.5	14	21.0	28.0	38	27	17	24	152	**DVWE12SROMD**	100	100
	14	G 3/4 A	10	32	30	22.0	16	24.0	33.0	40	32	19	27	236	**DVWE14SROMD**	100	100
	16	G 3/4 A	10	32	33	24.5	16	24.0	34.0	43	32	24	30	276	**DVWE16SROMD**	100	100
	20	G 1 A	16	40	37	26.5	18	27.5	39.5	48	41	27	36	415	**DVWE20SROMD**	100	100
	25	G 1 A	16	40	42	30.0	18	27.5	42.5	54	41	36	46	569	**DVWE25SROMD**	100	100
	30	G 1 1/4 A	22	50	49	35.5	20	31.0	48.0	62	50	41	50	886	**DVWE30SROMD**	100	100
	38	G 1 1/2 A	25	55	57	41.0	22	35.0	55.0	72	55	50	60	1375	**DVWE38SROMD**	100	100

[1] Pressure shown = item deliverable

[3] L = light series; [4] S = heavy series

$\frac{\text{PN (bar)}}{10} = \text{PN (MPa)}$

Delivery without nut and ring. Information on ordering complete fittings or alternative sealing materials see page I7.

*Please add the **suffixes** below according to the material/ surface required.

Order code suffixes			
Material	Suffix surface and material	Example	Standard sealing material (no additonal. suffix needed)
Steel, zinc plated, Cr(VI)-free	CF	DVWE06LROMDCF	NBR
FKM	VITCF	DVWE06LROMDVITCF	

DVWE-M Elbow male stud plain bearing rotary union

Male metric thread – ED-seal / EO 24° cone end

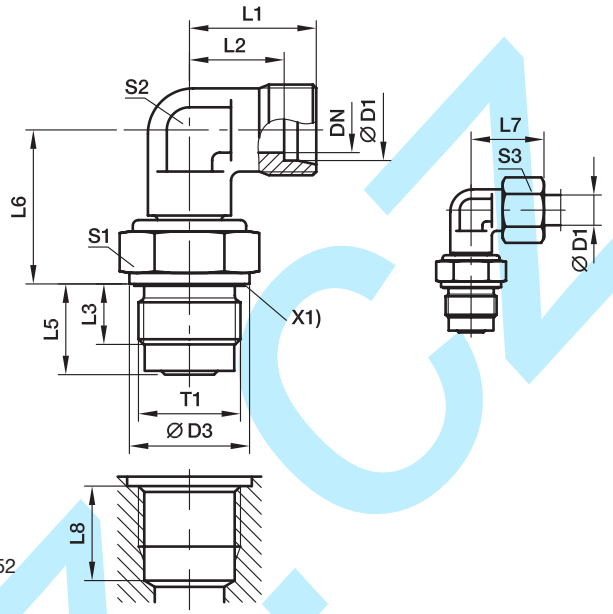

X1) Eolastic-sealing

L8 larger than DIN 3852 chart page Q22

Series	D1	T1	DN	D3	L1	L2	L3	L5	L6	L7	S1	S2	S3	Weight g/1 piece	Order code*	PN (bar)[1] CF	PN (bar)[1] VIT
L[3]	06	M 14×1.5	4.0	19	19	12.0	12	18.0	20.0	27	19	12	14	51	**DVWE06LMOMD**	40	40
	08	M 14×1.5	5.0	19	21	14.0	12	18.0	21.0	29	19	12	17	51	**DVWE08LMOMD**	40	40
	10	M 18×1.5	6.0	24	22	15.0	12	18.0	26.0	30	24	14	19	92	**DVWE10LMOMD**	40	40
	12	M 22×1.5	8.0	27	24	17.0	14	21.0	27.0	32	27	17	22	160	**DVWE12LMOMD**	40	40
	15	M 27×2.0	10.0	32	28	21.0	16	24.0	33.0	36	32	19	27	236	**DVWE15LMOMD**	40	40
	18	M 33×2.0	16.0	40	31	23.5	18	27.5	37.5	40	41	27	32	405	**DVWE18LMOMD**	40	40
	22	M 33×2.0	16.0	40	35	27.5	18	27.5	39.5	44	41	27	36	409	**DVWE22LMOMD**	40	40
	28	M 42×2.0	22.0	50	38	30.5	20	31.0	44.0	47	50	36	41	660	**DVWE28LMOMD**	40	40
	35	M 48×2.0	25.0	55	45	34.5	22	35.0	54.0	56	55	41	50	1012	**DVWE35LMOMD**	40	40
S[4]	06	M 14×1.5	4.0	19	23	16.0	12	18.0	21.0	31	19	12	17	59	**DVWE06SMOMD**	100	100
	08	M 14×1.5	5.0	19	24	17.0	12	18.0	22.0	32	19	14	19	66	**DVWE08SMOMD**	100	100
	10	M 18×1.5	6.0	24	25	17.5	12	18.0	27.0	34	24	17	22	113	**DVWE10SMOMD**	100	100
	12	M 22×1.5	8.0	27	29	21.5	14	21.0	28.0	38	27	17	24	153	**DVWE12SMOMD**	100	100
	16	M 27×2.0	10.0	32	33	24.5	16	24.0	34.0	43	32	24	30	284	**DVWE16SMOMD**	100	100
	20	M 33×2.0	16.0	40	37	26.5	18	27.5	39.5	48	41	27	36	427	**DVWE20SMOMD**	100	100
	25	M 33×2.0	16.0	40	42	30.0	18	27.5	42.5	54	41	36	46	581	**DVWE25SMOMD**	100	100
	30	M 42×2.0	22.0	50	49	35.5	20	31.0	48.0	62	50	41	50	898	**DVWE30SMOMD**	100	100
	38	M 48×2.0	25.0	55	57	41.0	22	35.0	55.0	72	55	50	60	1373	**DVWE38SMOMD**	100	100

[1] Pressure shown = item deliverable

[3] L = light series; [4] S = heavy series

$\frac{\text{PN (bar)}}{10}$ = PN (MPa)

Delivery without nut and ring. Information on ordering complete fittings or alternative sealing materials see page I7.

*Please add the **suffixes** below according to the material/ surface required.

Order code suffixes			
Material	Suffix surface and material	Example	Standard sealing material (no additonal. suffix needed)
Steel, zinc plated, Cr(VI)-free	CF	DVWE06LMOMDCF	NBR
FKM	VITCF	DVWE06LMOMDVITCF	

Port tapping for plain bearing rotary fittings DVGE and DVWE

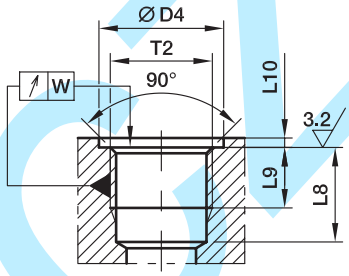

Port tapping form X
according to DIN 3852, part 1 and part 2
(for parallel male studs)

Thread d1	d4 small +0.4	a_1 max	L9 min	L8 min	W
M 14×1.5	20	1.5	12	19.0	0.1
M 18×1.5	25[2])	2.0	12	19.0	0.1
M 22×1.5	28	2.5	14	22.0	0.1
M 27×2.0	33	2.5	16	25.0	0.2
M 33×2.0	41[2])	2.5	18	28.5	0.2
M 42×2.0	51[2])	2.5	20	32.0	0.2
M 48×2.0	56	2.5	22	36.0	0.2
G 1/4 A	20[2])	1.5	12	19.0	0.1
G 3/8 A	23	2.0	12	19.0	0.1
G 1/2 A	28[2])	2.5	14	22.0	0.1
G 3/4 A	33	2.5	16	25.0	0.2
G 1 A	41[2])	2.5	18	28.5	0.2
G 1 1/4 A	51[2])	2.5	20	32.0	0.2
G 1 1/2 A	56	2.5	22	36.0	0.2

[1]) Not in DIN 3852
[2]) Different from DIN 3852

Kovaz.cz

SensoControl®
Test Points
Diagnostic-
Test equipment
Industrial Products

Visual index

Series 1
Test point fitting with pin-lock

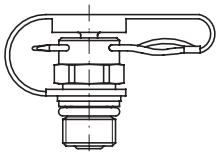

EMA1
p. R4

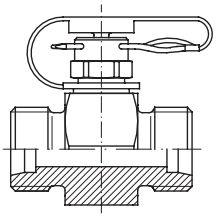

GMA1
p. R5

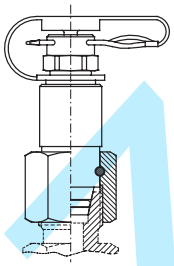

VKA1
p. R6

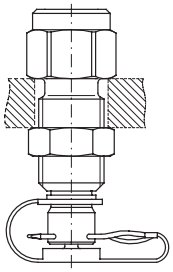

MAV ... MA1
p. R7

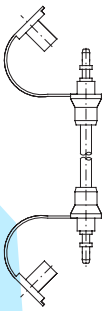

SMA1
p. R7

Series 3
Test point with threaded connection
M 16×2

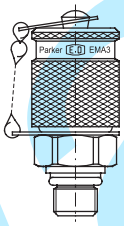

EMA3
p. R8

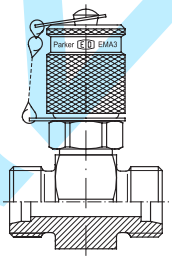

GMA3
p. R9

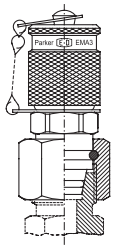

VKA3
p. R10

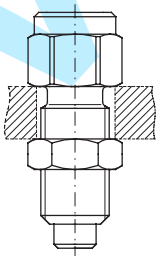

MAV ... MA3
p. R11

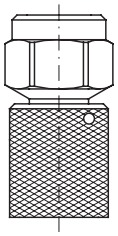

MAVMD ... MA3
p. R11

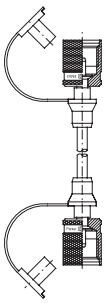

SMA3
p. R11

SensoControl®

Product range

Diagnostic/Industrial

p. R12

kovaz.cz

EMA1/EMA3-Test Point fitting

- For pressure monitoring and checking on high, low and negative pressure systems.
- For bleeding cylinders and hydraulic systems.
- For taking samples on high, low and negative pressure systems.

Advantages:

- Leakfree connection before valve is open
- Sturdy, safe constructions for small dimensions
- Easy handling
- Simple connection of measuring, control and switching devices
- Coupling under pressure up to 400 bar is possible with screw couplings
- Nominal pressures up to 630 bar
- Self locking metal guard cap, vibration resistant

Sealing system of the primary seal:

EMA1 by ball non-return valve.
EMA3 by cone seal with O-ring.
The new EMA3 sealing system guarantees minimum leakage rates.

The screw-on Cap (EMA3), and pin lock (EMA1) types both employ an O-ring seal as secondary sealing with the hose attached.

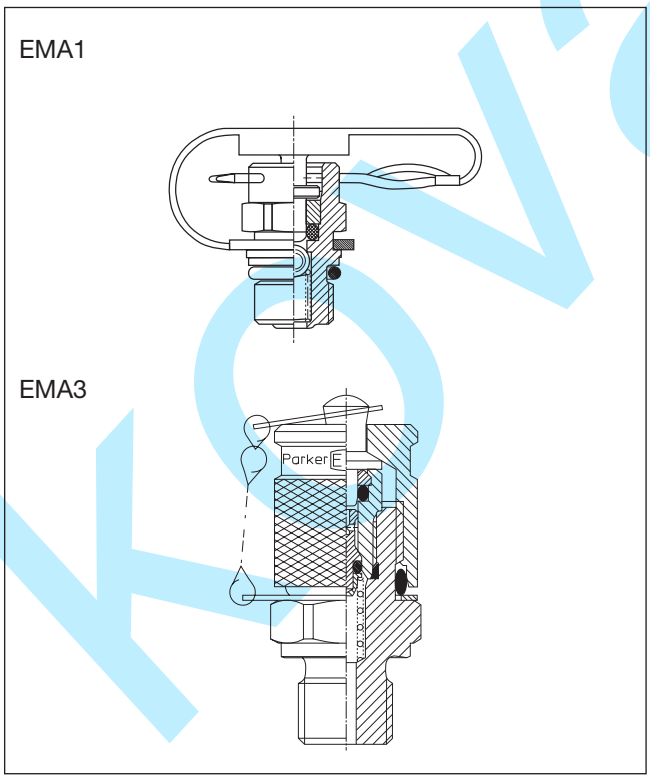

Differences between EMA1 and EMA3 types

a) sealing system (see previous section)
b) Test hose connection by plug-in coupling in EMA1
Test hose connection by threaded connection in EMA3
c) Working pressures (see section advantages)

Working pressure

- EMA3 types up to 630 bar
- EMA1 types up to 400 bar
- Max. working pressure 630 bar for GMA, VKA and EMA… the recommended working pressure of fitting manufacturer has to be applied
- Joining under pressure up to 400 bar max.
- The allowable nominal pressures of each Test-Point are shown on the product pages.

Materials and Temperatures:

- Steel, zinc plated, Cr(VI)-free
- Stainless Steel, material 1.4571
- Seals:
- FKM (Temperature range –20 to +200°C)
- EPDM Ethylene Propylene (for Break Fluid) (Temperature range –40 to +150°C)
- Internal seals are always FKM
- Hose:
Polyamide (Temperature range: –35°C … 100°C max.)
- Stainless Steel FKM only

Media:

- Suitable for hydraulic oils and other mineral oil based fluids (Please pay attention to the sealing materials used!)
- For use in conjunction with other liquid media please consult Parker

Standards
ISO15171-2

Perbunan = registered trademark of Bayer

R

kovak.cz

EMA1 Test point fitting with pin-lock Series 1

Male stud thread: BSP, metric

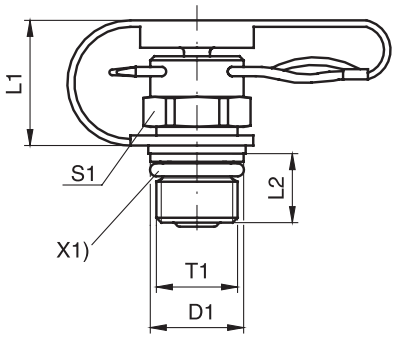

Fig. A

X1) O-ring
X2) Cutting face

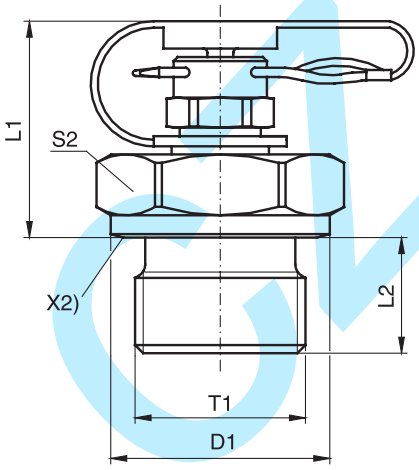

Fig. B

T1	D1	L1	L2	S1	S2	Fig.	Weight g/1 piece	Order code*	PN (bar)[1] CF	DF**
M 12×1.5	17.0	32.0	12.0		19	B	53	**EMA1/12X1.5**	400	4
M 14×1.5	19.0	32.0	12.0		19	B	56	**EMA1/14X1.5**	400	4
M 16×1.5	21.0	25.0	12.0		22	B	47	**EMA1/16X1.5**	400	4
G 1/8	14.0	32.5	8.0		17	B	41	**EMA1/1/8**	400	4
G 1/4	18.0	32.0	12.0		19	B	54	**EMA1/1/4**	400	4
G 3/8	22.0	27.5	12.0		22	B	55	**EMA1/3/8**	400	4
G 1/2	26.0	27.5	14.0		27	B	78	**EMA1/1/2**	400	4
M 08×1.0	9.5	17.5	8.4	12		A	16	**EMA1/8X1OR**	400	4
M 10×1.0	11.5	18.0	8.0	12		A	18	**EMA1/10X1OR**	400	4
M 10×1.0	14.0	32.5	8.0		17	B	42	**EMA1/10X1**	400	4

**DF = Design Factor

[1]) Pressure shown = item deliverable

$\frac{\text{PN (bar)}}{10}$ = PN (MPa)

*Please add the **suffixes** below according to the material/ surface required.

Order code suffixes			
Material	Suffix surface and material	Example	Standard sealing material (no additonal. suffix needed)
Steel, zinc plated, Cr(VI)-free	CF	EMA1/12X1.5CF	NBR

Kovalent

GMA1 Straight test point fitting with pin-lock Series 1

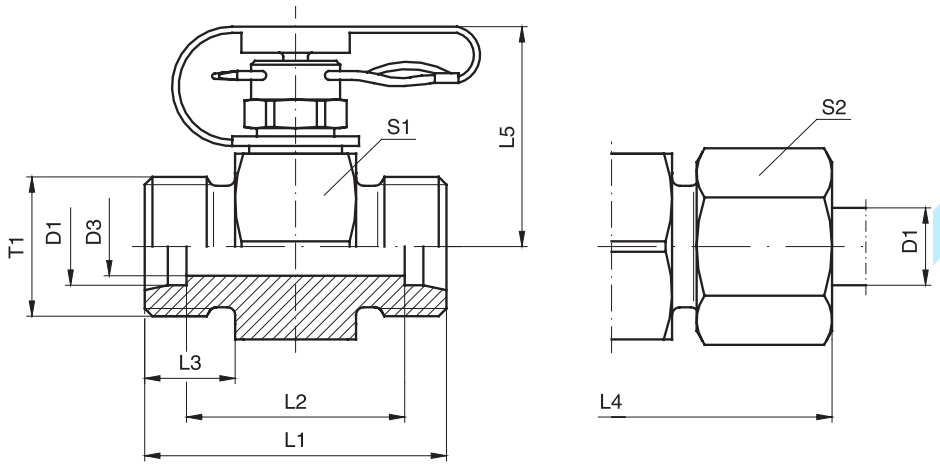

Series	D1	T1	D3	L1	L2	L3	L4	L5	S1	S2	Weight g/1 piece	Order code*	PN (bar)[1] CF	DF**
L[3]	06	M 12×1.5	4	35	21	10	51	29.0	24	14	73	**GMA1/06LOMD**	315	4
	08	M 14×1.5	6	35	21	10	51	29.0	24	17	75	**GMA1/08LOMD**	315	4
	10	M 16×1.5	7	37	23	11	53	29.0	24	19	80	**GMA1/10LOMD**	315	4
	12	M 18×1.5	8	37	23	11	53	30.5	24	22	96	**GMA1/12LOMD**	315	4
	15	M 22×1.5	11	39	25	12	55	32.0	30	27	121	**GMA1/15LOMD**	315	4
	18	M 26×1.5	14	39	24	12	57	33.0	32	32	139	**GMA1/18LOMD**	315	4
	22	M 30×2.0	18	43	28	14	61	35.0	36	36	171	**GMA1/22LOMD**	160	4
S[4]	06	M 14×1.5	4	39	25	12	55	29.0	24	17	82	**GMA1/06SOMD**	400	4
	08	M 16×1.5	5	39	25	12	55	29.0	24	19	88	**GMA1/08SOMD**	400	4
	10	M 18×1.5	7	39	24	12	57	29.0	24	22	90	**GMA1/10SOMD**	400	4
	12	M 20×1.5	7	39	24	12	57	29.0	24	24	96	**GMA1/12SOMD**	400	4
	14	M 22×1.5	10	43	27	14	63	30.5	27	27	121	**GMA1/14SOMD**	400	4
	16	M 24×1.5	11	43	26	14	63	32.0	30	30	138	**GMA1/16SOMD**	400	4
	20	M 30×2.0	15	47	26	16	69	35.0	36	36	222	**GMA1/20SOMD**	400	4

**DF = Design Factor

[1] Pressure shown = item deliverable

[3] L = light series; [4] S = heavy series

$\frac{PN\ (bar)}{10}$ = PN (MPa)

Delivery without nut and ring. Information on ordering complete fittings or alternative sealing materials see page I7.

*Please add the **suffixes** below according to the material/ surface required.

Order code suffixes			
Material	Suffix surface and material	Example	Standard sealing material (no additonal. suffix needed)
Steel, zinc plated, Cr(VI)-free	CF	GMA1/06LOMDCF	NBR

R

VKA1 Test point fitting with pin lock for cones Series 1

With 24° cone swivel nut connection

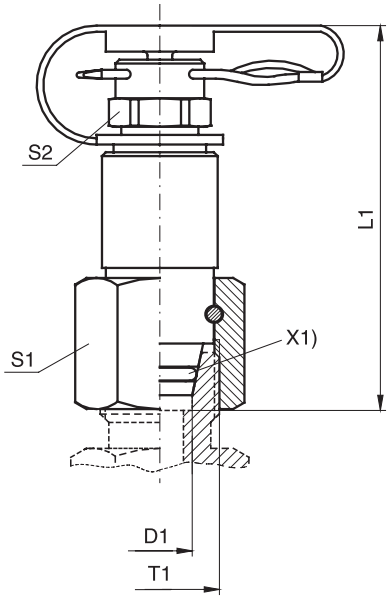

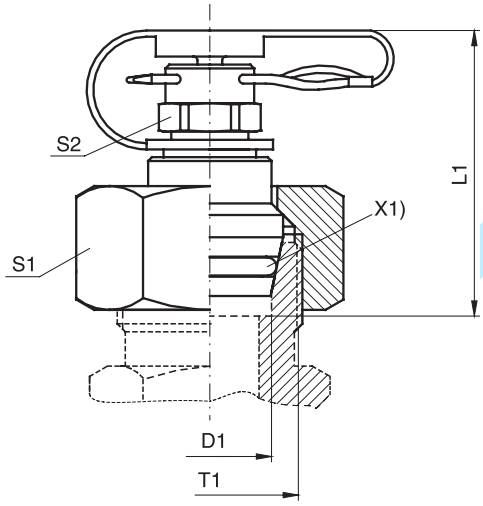

X1) O-ring

Series	D1	T1	L1	S1	S2	Fig.	Weight g/1 piece	Order code*	PN (bar)1) CF	DF**
L[3])	06	M 12×1.5	48	14	12	A	44	**VKA1/06L**	315	4
	08	M 14×1.5	49	17	12	A	54	**VKA1/08L**	315	4
	10	M 16×1.5	50	19	12	A	68	**VKA1/10L**	315	4
	12	M 18×1.5	51	22	12	A	81	**VKA1/12L**	315	4
	15	M 22×1.5	39	27	12	B	82	**VKA1/15L**	315	4
	18	M 26×1.5	38	32	12	B	112	**VKA1/18L**	315	4
S[4])	06	M 14×1.5	48	17	12	A	51	**VKA1/06S**	400	4
	08	M 16×1.5	50	19	12	A	62	**VKA1/08S**	400	4
	10	M 18×1.5	50	22	12	A	78	**VKA1/10S**	400	4
	12	M 20×1.5	51	24	12	A	100	**VKA1/12S**	400	4
	14	M 22×1.5	39	27	12	B	88	**VKA1/14S**	400	4
	16	M 24×1.5	37	30	12	B	105	**VKA1/16S**	400	4
	20	M 30×2.0	44	36	12	B	174	**VKA1/20S**	400	4

**DF = Design Factor

[1]) Pressure shown = item deliverable

[3]) L = light series; [4]) S = heavy series

$\frac{\text{PN (bar)}}{10}$ = PN (MPa)

*Please add the **suffixes** below according to the material/ surface required.

Order code suffixes			
Material	Suffix surface and material	Example	Standard sealing material (no additonal. suffix needed)
Steel, zinc plated, Cr(VI)-free	CF	VKA1/06LCF	NBR

MAV-MA1 Test Point pressure gauge connector with pin-lock
SMA1 Test Point high pressure hose with pin-lock Series 1

Female thread: BSP
Sealing: sealing ring DIN 16258

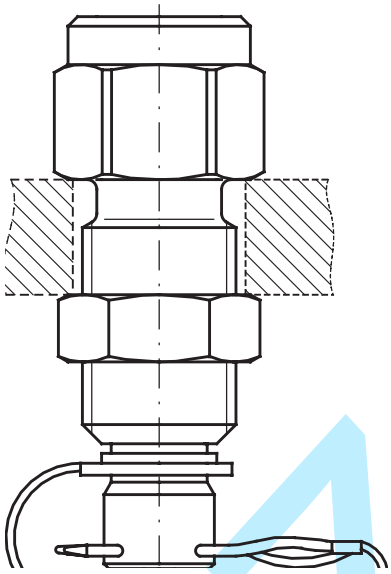

Pressure gauge connector: MAV-MA1

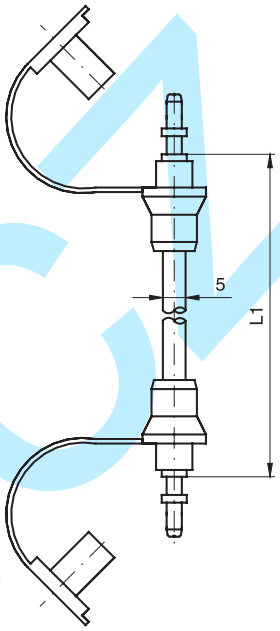

Test hose: SMA1

T1	L1	L2 max.	S1	S2	Weight g/1 piece	Order code*	PN (bar)1) CF	DF**
G 1/4	61.5	12	19	19	78	**MAV1/4MA1**	400	4.0
G 1/2	72.0	12	27	19	135	**MAV1/2MA1**	400	4.0
	400.0				21	**SMA1-400**	400	2.5
	630.0				26	**SMA1-630**	400	2.5
	800.0				26	**SMA1-800**	400	2.5
	1000.0				31	**SMA1-1000**	400	2.5
	1500.0				40	**SMA1-1500**	400	2.5
	2000.0				49	**SMA1-2000**	400	2.5
	2500.0				58	**SMA1-2500**	400	2.5
	3200.0				70	**SMA1-3200**	400	2.5
	4000.0				84	**SMA1-4000**	400	2.5

**DF = Design Factor

[1]) Pressure shown = item deliverable

$\frac{PN\ (bar)}{10} = PN\ (MPa)$

*Please add the **suffixes** below according to the material/ surface required.

Order code suffixes			
Material	Suffix surface and material	Example	Standard sealing material (no additonal. suffix needed)
Steel, zinc plated, Cr(VI)-free	CF	MAV1/4MA1CF	NBR

Note hoses with small diameter:
- Min. bending radius r = 20 mm
- Working temperature –20 °C up to 100 °C (short time to +120 °C)
- Hoses are to be protected from fire, from sharp-corners and hot objects.

Temperature factor of pressure rating:

up to	0 °C	122 %
for	30 ° C	110 %
for	50 °C	100 %
for	80 °C	86 %
for	100 °C	77 %

For measuring with liquid pressure media please note:
Bleed before connecting tube! By capillary action discharge of the pressure medium is prevented widely.

R

EMA3 Test Point with threaded connection M 16×2 Series 3

Male thread: BSP, metric

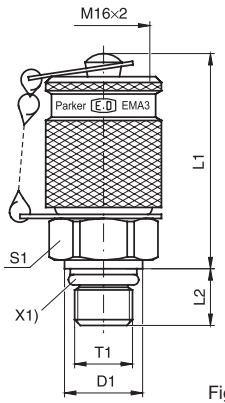

Fig. A

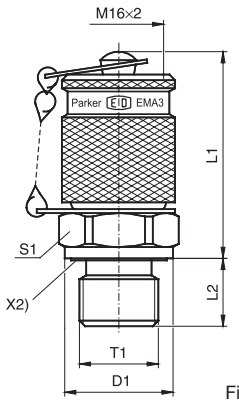

Fig. B

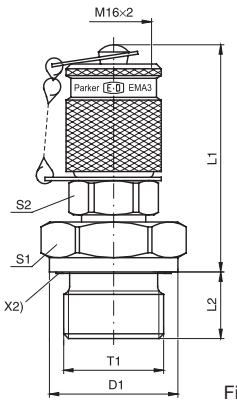

Fig. C

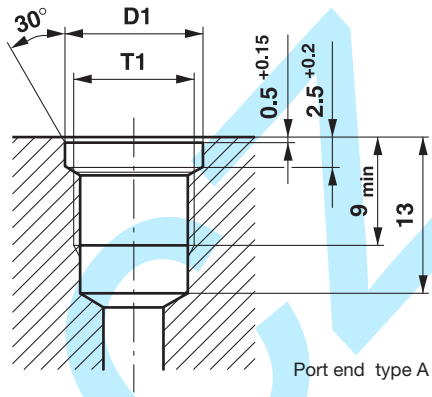

Port end type A

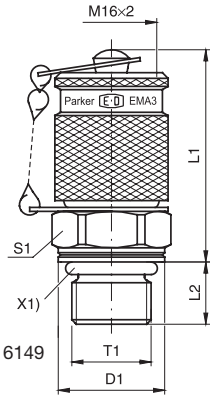

ISO 6149

Fig. F

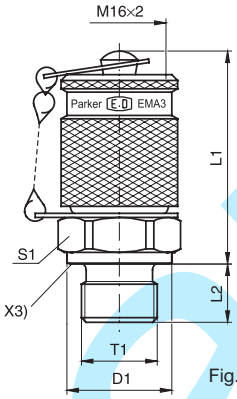

Fig. D

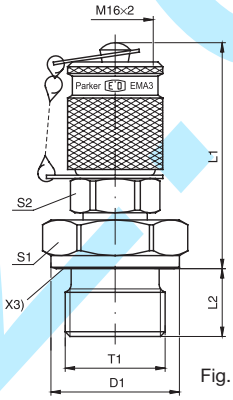

Fig. E

X1) O-ring
X2) Eolastic sealing
X3) Cutting face

T1	D1	L1	L2	S1	S2	Fig.	Weight g/1 piece	Order code*	PN (bar)[1] CF	PN (bar)[1] 71	DF** CF	DF** 71
M 08×1.0	9.5	38.5	7.5	17		A	66	**EMA3/8X1OR**	250		4.0	
M 10×1.0	11.5	37.0	7.5	17		A	70	**EMA3/10X1OR**	630	630	4.0	4
M 14×1.5	18.8	39.5	11.0	19		F	79	**EMA3/14X1.5ISO**	630	630	4.0	4
M 10×1.0	14.0	40.0	8.0	17		D	67	**EMA3/10X1**	400		4.0	
M 12×1.5	17.0	38.0	12.0	17		D	74	**EMA3/12X1.5**	400		4.0	
M 14×1.5	19.0	39.0	12.0	19		D	78	**EMA3/14X1.5**	400		4.0	
M 16×1.5	21.0	40.0	12.0	22		D	90	**EMA3/16X1.5**	400		4.0	
G 1/8	14.0	37.5	8.0	17		D	70	**EMA3/1/8**	400		4.0	
G 1/4	18.0	39.0	12.0	19		D	77	**EMA3/1/4**	400		4.0	
G 3/8	22.0	40.5	12.0	22		D	91	**EMA3/3/8**	400		4.0	
G 1/2	26.0	46.0	14.0	27	17	E	137	**EMA3/1/2**	400		3.4	
G 1/8	14.0	37.5	8.0	17		B	72	**EMA3/1/8ED**	400	400	4.0	4
G 1/4	19.0	39.0	12.0	19		B	76	**EMA3/1/4ED**	630	630	4.0	4
G 3/8	22.0	40.5	12.0	22		B	93	**EMA3/3/8ED**	630	630	4.0	4
M 10×1.0	14.0	40.0	8.0	17		B	71	**EMA3/10X1ED**	400	400	4.0	4
M 12×1.5	17.0	38.0	12.0	17		B	72	**EMA3/12X1.5ED**	630	630	4.0	4
M 14×1.5	19.0	39.0	12.0	19		B	77	**EMA3/14X1.5ED**	400	400	4.0	4
G 1/2	27.0	46.0	14.0	27	17	C	135	**EMA3/1/2ED**	400	400	4.0	4

**DF = Design Factor

[1] Pressure shown = item deliverable

$\frac{\text{PN (bar)}}{10}$ = PN (MPa)

*Please add the **suffixes** below according to the material/ surface required.

Order code suffixes			
Material	Suffix surface and material	Example	Standard sealing material (no additonal. suffix needed)
Steel, zinc plated, Cr(VI)-free	CF	EMA3/10X10ORCF	NBR
Stainless Steel	71	EMA3/10X10OR71	VIT
Stainless Steel	316L	EMA3/1/4ED316L	NBR

GMA3 Straight Test Point with threaded connection M 16×2 Series 3

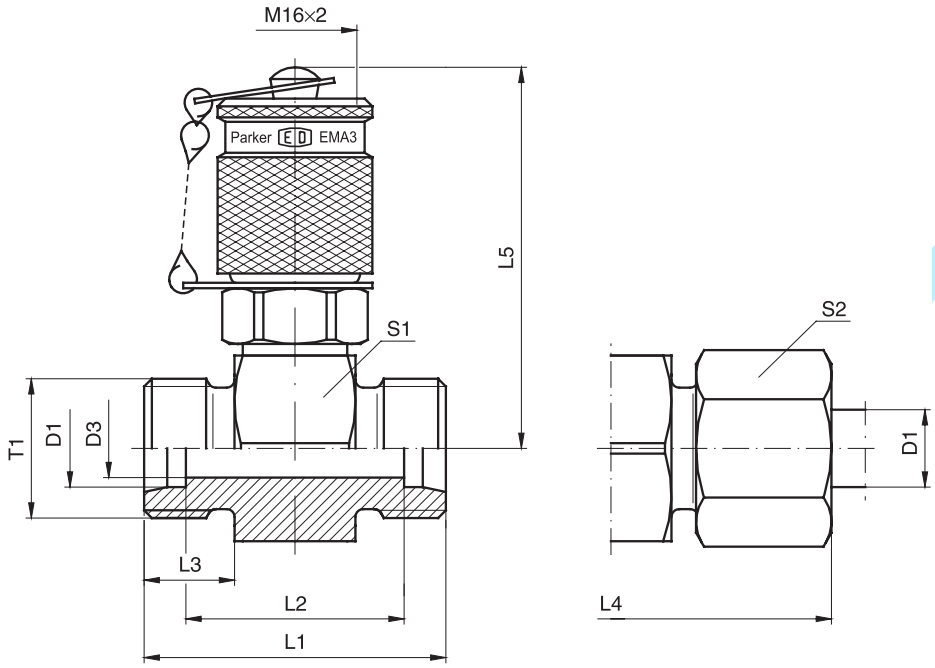

Series	D1	T1	D3	L1	L2	L3	L4	L5	S1	S2	Weight g/1 piece	Order code*	PN (bar)[1] CF	PN (bar)[1] 71	DF** CF	DF** 71
L[3])	06	M 12×1.5	4	35	21	10	51	49.0	24	14	126	**GMA3/06LOMD**	315	315	4	4
	08	M 14×1.5	6	35	21	10	51	49.0	24	17	128	**GMA3/08LOMD**	315	315	4	4
	10	M 16×1.5	7	37	23	11	53	49.0	24	19	132	**GMA3/10LOMD**	315	315	4	4
	12	M 18×1.5	8	37	23	11	53	50.5	27	22	145	**GMA3/12LOMD**	315	315	4	4
	15	M 22×1.5	11	39	25	12	55	52.0	30	27	174	**GMA3/15LOMD**	315	315	4	4
	18	M 26×1.5	14	39	24	12	57	53.0	32	32	192	**GMA3/18LOMD**	315	315	4	4
	22	M 30×2.0	18	43	28	14	61	55.0	36	36	220	**GMA3/22LOMD**	160	160	4	4
	28	M 36×2.0	23	43	28	14	61	57.5	41	41	259	**GMA3/28LOMD**	160	160	4	4
	35	M 45×2.0	30	47	26	16	69	60.0	46	50	363	**GMA3/35LOMD**	160	160	4	4
	42	M 52×2.0	36	47	25	16	71	64.5	55	60	419	**GMA3/42LOMD**	160	160	4	4
S[4])	06	M 14×1.5	4	39	25	12	55	49.0	24	17	137	**GMA3/06SOMD**	630	630	4	4
	08	M 16×1.5	5	39	25	12	55	49.0	24	19	141	**GMA3/08SOMD**	630	630	4	4
	10	M 18×1.5	7	39	24	12	57	49.0	24	22	141	**GMA3/10SOMD**	630	630	4	4
	12	M 20×1.5	7	39	24	12	57	49.0	24	24	150	**GMA3/12SOMD**	630	630	4	4
	14	M 22×1.5	10	43	27	14	63	50.5	27	27	172	**GMA3/14SOMD**	630	630	4	4
	16	M 24×1.5	11	43	26	14	63	52.0	30	30	195	**GMA3/16SOMD**	400	400	4	4
	20	M 30×2.0	15	47	26	16	69	55.0	36	36	254	**GMA3/20SOMD**	400	400	4	4
	25	M 36×2.0	20	51	27	18	75	57.5	41	46	329	**GMA3/25SOMD**	400	400	4	4
	30	M 42×2.0	25	55	28	20	81	60.0	46	50	412	**GMA3/30SOMD**	400	400	4	4
	38	M 52×2.0	32	61	29	22	91	64.5	55	60	616	**GMA3/38SOMD**	315	315	4	4

**DF = Design Factor

[1]) Pressure shown = item deliverable

[3]) L = light series; [4]) S = heavy series

$\frac{\text{PN (bar)}}{10}$ = PN (MPa)

Delivery without nut and ring.
Information on ordering complete fittings or alternative sealing materials see page I7.

*Please add the **suffixes** below according to the material/ surface required.

Order code suffixes			
Material	Suffix surface and material	Example	Standard sealing material (no additonal. suffix needed)
Steel, zinc plated, Cr(VI)-free	CF	GMA3/06LOMDCF	NBR
Stainless Steel	71	GMA3/06LOMD71	VIT

R

VKA3 Test Point for cones with threaded connection M 16×2 Series 3

With 24° cone swivel nut connection

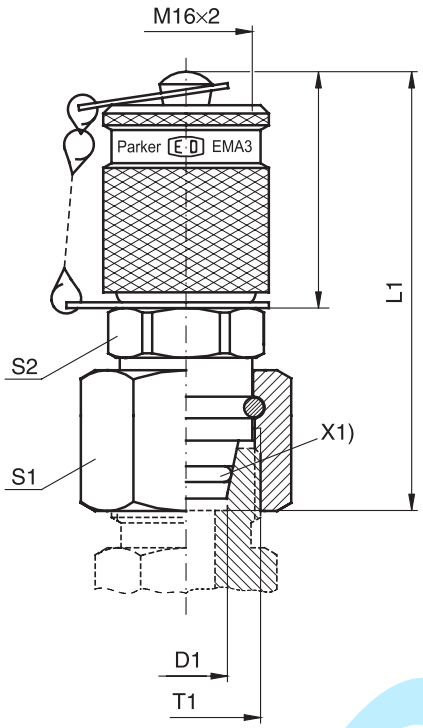

Fig. A

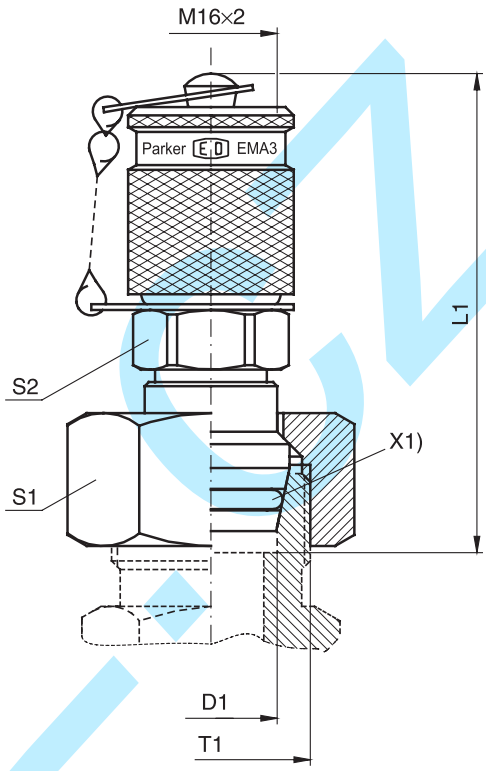

Fig. B

X1) O-ring

Series	D1	T1	L1	S1	S2	Fig.	Weight g/1 piece	Order code*	PN (bar)[1] CF	PN (bar)[1] 71	DF** CF	DF** 71
L[3])	06	M 12×1.5	55	14	17	A	82	**VKA3/06L**	315	315	4	4
	08	M 14×1.5	51	17	17	A	82	**VKA3/08L**	315	315	4	4
	10	M 16×1.5	53	19	17	A	93	**VKA3/10L**	315	315	4	4
	12	M 18×1.5	53	22	17	A	107	**VKA3/12L**	315	315	4	4
	15	M 22×1.5	59	27	17	B	133	**VKA3/15L**	315	315	4	4
	18	M 26×1.5	59	32	17	B	163	**VKA3/18L**	315	315	4	4
	22	M 30×2.0	60	36	17	B	205	**VKA3/22L**	160	160	4	4
	28	M 36×2.0	64	41	17	B	269	**VKA3/28L**	160	160	4	4
	35	M 45×2.0	71	50	17	B	411	**VKA3/35L**	160	160	4	4
	42	M 52×2.0	72	60	17	B	592	**VKA3/42L**	160	160	4	4
S[4])	06	M 14×1.5	50	17	17	A	81	**VKA3/06S**	630	630	4	4
	08	M 16×1.5	52	19	17	A	88	**VKA3/08S**	630	630	4	4
	10	M 18×1.5	53	22	17	A	99	**VKA3/10S**	630	630	4	4
	12	M 20×1.5	54	24	19	A	121	**VKA3/12S**	630	630	4	4
	14	M 22×1.5	59	27	17	B	136	**VKA3/14S**	630	630	4	4
	16	M 24×1.5	58	30	17	B	156	**VKA3/16S**	400	400	4	4
	20	M 30×2.0	65	36	17	B	223	**VKA3/20S**	400	400	4	4
	25	M 36×2.0	68	46	17	B	367	**VKA3/25S**	400	400	4	4
	30	M 42×2.0	74	50	17	B	444	**VKA3/30S**	400	400	4	4
	38	M 52×2.0	81	60	17	B	655	**VKA3/38S**	315	315	4	4

**DF = Design Factor

[1]) Pressure shown = item deliverable

[3]) L = light series; [4]) S = heavy series

$\frac{\text{PN (bar)}}{10}$ = PN (MPa)

*Please add the **suffixes** below according to the material/ surface required.

Order code suffixes			
Material	Suffix surface and material	Example	Standard sealing material (no additonal. suffix needed)
Steel, zinc plated, Cr(VI)-free	CF	VKA3/06LCF	NBR
Stainless Steel	71	VKA3/06L71	VIT

MAV…MA3 Test point pressure gauge connector with threaded connection M 16×2
MAVMD…MA3 Test point with threaded connection M 16×2
SMA3 Test point high pressure hose with threaded connection M 16×2 Series 3

Female thread: BSP
Sealing: sealing ring DIN 16258*

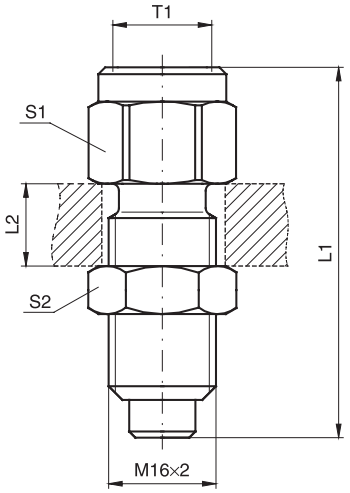

Pressure gauge connector:
MAV…MA3

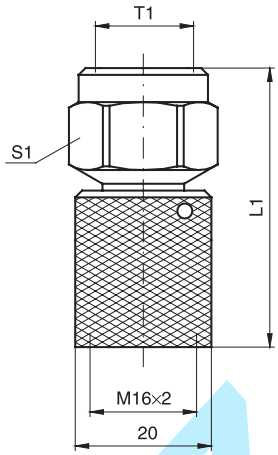

Gauge-Direct-Connector:
MAVMD…MA3

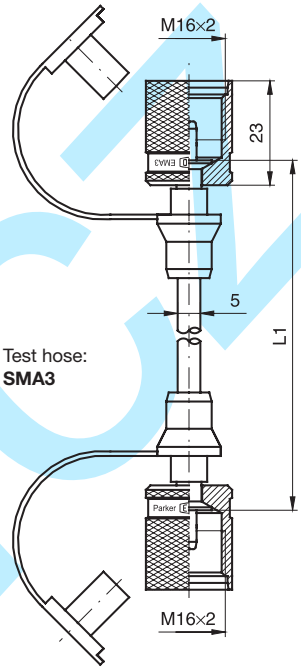

T1	L1	L2 max.	S1	S2	Weight g/1 piece	Order code*	PN (bar)1) CF	DF**
G 1/4	54.0	12	19	19	74	**MAV1/4MA3**	630	4.0
G 1/2	64.0	12	27	19	129	**MAV1/2MA3**	630	4.0
G 1/4	41.0		19		61	**MAVMD1/4MA3**	630	4.0
G 1/2	51.5		27		103	**MAVMD1/2MA3**	630	4.0
	200.0				73	**SMA3-200**	630	2.5
	300.0				74	**SMA3-300**	630	2.5
	400.0				74	**SMA3-400**	630	2.5
	630.0				79	**SMA3-630**	630	2.5
	800.0				83	**SMA3-800**	630	2.5
	1000.0				87	**SMA3-1000**	630	2.5
	1500.0				95	**SMA3-1500**	630	2.5
	2000.0				105	**SMA3-2000**	630	2.5
	2500.0				110	**SMA3-2500**	630	2.5
	3200.0				125	**SMA3-3200**	630	2.5
	4000.0				137	**SMA3-4000**	630	2.5

**DF = Design Factor

1) Pressure shown = item deliverable

$\frac{PN\ (bar)}{10}$ = PN (MPa)

*Please add the **suffixes** below according to the material/ surface required.

Order code suffixes			
Material	Suffix surface and material	Example	Standard sealing material (no additonal. suffix needed)
Steel, zinc plated, Cr(VI)-free	CF	MAV1/4MA3CF	NBR

* Sealing rings according to DIN 16258 for steel design of copper, for stainless steel design of stainless steel.

Note hoses with small diameter:
- Min. bending radius r = 20 mm
- Working temperature –20 °C up to 100 °C (short time to +120 °C)
- Hoses are to be protected from fire, from sharp-corners and hot objects.

For measuring with liquid pressure media please note:
Bleed before connecting tube! By capillary action discharge of the pressure medium is prevented widely.

Temperature factor of pressure rating:

up to	0 °C	122 %
for	30 °C	110 %
for	50 °C	100 %
for	80 °C	86 %
for	100 °C	77 %

R

ServiceJunior

The **ServiceJunior** enables the measurement and display of pressures in a single device. Thanks to the four-digit display, the measurement values are displayed more accurately. Pressure peaks are securely recorded with a sampling rate of 10 ms.

The **ServiceJunior** is characterized by its easy use. With its convincing price-performance ratio, the device offers all the advantages of digital pressure measurement.
The measurement of MIN and MAX values enables pressure peaks to be recorded.

Device features:
- Digital pressure measurement and backlit display
- Accuracy ± 0.1-0.5 % FS (FullScale)
- Display with a bar chart (drag indicator) using the peak hold function
- Pressure peak measurement with 10 ms sampling rate
- Easy operation
- Robust and reliable
- Rotating

Parker Serviceman Plus

The new **Parker Serviceman Plus** is a mobile, extremely robust and easy-to-use measurement instrument for numerous measurement tasks in mobile hydraulics and stationary hydraulic plants.

Thanks to the automatic sensor recognition, you can simply clip in pressure, temperature, flow rate and speed sensors and start measurements immediately. No tedious sensor parameterizing required, the measuring ranges are automatically scaled and the measurement unit is shown in the display.

Device features:
- Easy operation
- Robust design with oil-resistant rubber protection
- Plug-&-Play functionality
- Large back-lit display
- New storage concept with a Nano USB stick
- Incl. PC software SensoWin®
- Can be delivered in 2 versions: analog or CAN

KOVAZ.CZ

The Parker Service Master *Easy*

The Parker Service Master *Easy* is a multi-channel portable measurement instrument for the simultaneous measurement of important hydraulic units:

It can measure, display, store and process all hydraulic parameters such as pressure, differential pressure, temperature, rotation speed, flow rate and hydraulic performance.

In order to meet the requirements of both modern industry hydraulics and complex mobile hydraulics, different versions are available to the user.

Device features:
- 3-channel and 4-channel versions
- Easy to use thanks to automatic sensor recognition
- PC connection
- Measuring channels
- Integrated memory
- Trigger storage
- Incl. PC software SensoWin®

The Parker Service Master *Plus*

In machine, plant and vehicle construction, the implementation possibilities of hydraulics are constantly increasing through the combination of hydraulics and electronics. **The Parker Service Master *Plus*** meets the demands of this development. It has never been easier to measure, display and analyze complex processes. The tried and tested storage process is particularly targeted at the measurement of MIN and MAX values and, in combination with various display options, offers analysis possibilities for problem solving.

Device features:
- Portable multi-function measuring instrument
- Measure, monitor and analyze pressure, temperature, volumetric flow rate and rotation speed.
- Measurements and displays from 26 sensors
- Presentation of measurement values as figures, bars, pointer and curves
- Project templates stored and loaded
- Interfaces: CAN, LAN, USB
- Storage of all measurement values for more than 1 billion values.
- Measurement data (automated recording, storage and analysis via LAN and USN with PC software SensoWin®)

Kovak.cz

PC software SensoWin®

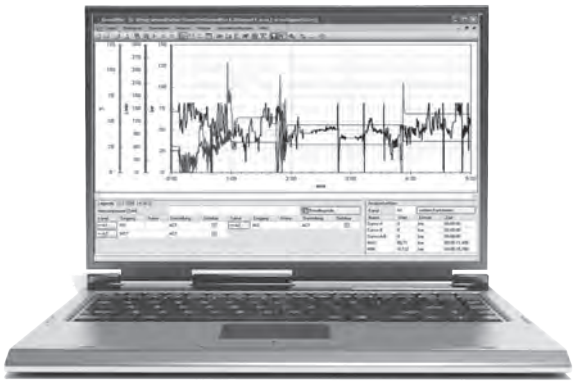

PC software **SensoWin®** is an easy-to-use aid for importing and editing the measurement curves recorded by the **Parker Serviceman Plus, The Parker Service Master *Easy*** or **The Parker Service Master *Plus*.**

Documentation and certificates are easily and cheaply issued, as PC software **SensoWin®** can serve all possibilities and advantages of Windows.

Device features:
- Easy operation
- Compatible with Windows 2000/XP/VISTA/7 (32- und 64-bit)
- Zoom function
- Conjunction of measurement curves
- Tabular view of measurement values
- Calculation of extreme values
- Cursor function
- Transmission of measurement procedures and documentation print-out
- Export function
- Online measurement

Test-Kit SCJN

Thanks to the **ServiceJunior-Test-Kit**, you can easily check manometers and pressure sensors, configure pressure switches and much more besides.

The Kit consists of a hand pump, with a choice of hydraulic or pneumatic, to produce a definite control pressure, and of a **ServiceJunior** as a reference device. Air, water and oil are used as pressure media.

Device features:
- Easy production of control pressures and adjustment of:
  - manometers
  - pressure sensors
  - pressure switches
  - safety valves
- Also suitable for portable use
- Pneumatic version from -0.95 - 60 bar and hydraulic version from 0 - 700 bar
- No additional power supply required
- Comprehensive adaptor set included

kovaz.cz

SCMA-FCU-600 Frequency Measurement

With the **SCMA-FCU-600** frequency signals such as turbines, flowmeters and speed sensors with a frequency output can be connected to our portable measuring instruments. Sinusoidal or squarewave signals from 1 Hz to 5 Hz can be processed with a signal amplitude of 40 mV to 10 V. Configuration through USB and PC software.

- **Power supply for external sensor**
  With the **SCMA-FCU-600**, external sensors can be supplied with a voltage of 24 V.

- **Analog and CAN outlet**
  The SCMA-FCU-600 can be connected to the analog or CAN input of our measuring instruments, as desired.

SCMA-VADC-600

Signals such as 0/4...20 mA or 0...10 V from other sensors e. g. for torque, force or displacement, can be connected to our portable measuring instruments

Applications:
- Force/displacement diagram
- Torque-volumetric flow rate characteristic curve

- **Current/voltage measurement**

Electric currents up to 4 ADC and voltage up to 48 VDC can be measured with this module.

Applications:
- Current consumption at proportional valve
- Measurement of switching states of motors/ pumps

kovaz

R

SCP Pressure Measurement - Analog

Quick response times guarantee a quick identification of disturbing pressure peaks in the hydraulic system. The robust stainless steel construction allows a variety of applications, e. g. in hydraulics, for cooling water or in compressed air systems.

All pressure sensors are delivered with pre-assembled diagnosis adaptors (M16x2). The connection to the hydraulic system is quick and secure. Reduced assembly times.

Device features:
- Small size
- Robust stainless steel design
- Response time of 1 ms
- Pressure peaks logged
- Accuracy ± 0.5 %

SCP Pressure Measurement - CAN

All the advantages of the analog SCP sensors combined with future-proof CAN bus technology. Simple wiring with the quick plug/screw connection SPEEDCON®. Plug-&-Play functionality with minimum configuration effort.

All pressure sensors are delivered with pre-assembled diagnosis adaptors (M16x2). The connection to the hydraulic system is quick and secure. Reduced assembly times.

Device features:
- Small size
- Robust stainless steel design
- Response time of 1 ms
- Pressure peaks logged
- Accuracy ± 0.5 %
- Quick plug/screw connection SPEEDCON®
- Sensor identification light ring
- Suitable for long cable lengths

SPEEDCON® Registered trademark of the PHÖNIX CONTACT GmbH & Co company. KG

SCPT Pressure/Temperature Measurement - Analog

Quick response times guarantee a quick identification of disturbing pressure peaks in the hydraulic system. The robust stainless steel construction allows a variety of applications, e. g. in hydraulics, for cooling water or in compressed air systems.

All pressure sensors are delivered with pre-assembled diagnosis adaptors (M16X). The connection to the hydraulic system is quick and secure. Reduced assembly times.

Device features:
- Robust stainless steel design
- Response time of 1 ms
- Pressure peaks logged
- Accuracy ± 0.5 %

SCPT Pressure/Temperature Measurement - CAN

All the advantages of the analog SCPT sensors combined with future-proof CAN bus technology. Simple wiring with the quick plug/screw connection SPEEDCON®. Plug-&-Play functionality with minimum configuration effort.

All pressure sensors are delivered with pre-assembled diagnosis adaptors (M16x2). The connection to the hydraulic system is quick and secure. Reduced assembly times.

Device features:
- Robust stainless steel design
- Response time of 1 ms
- Pressure peaks logged
- Future-proof CAN bus technology
- Simple wiring with SPEEDCON®
- Sensor identification LED
- Suitable for long cable lengths
- Accuracy ± 0.5%

SPEEDCON® Registered trademark of the PHÖNIX CONTACT GmbH & Co company. KG

Catalogue 4054
Catalogue 4054

R

SCT Temperature Measurement - Analog

Temperature measurements in hydraulics are useful for searching for faults and for avoiding damage following too high temperatures in critical components such as pumps or proportional valves.

In order to carry out a precise temperature measurement, the temperature is measured directly in the pipe or hose line.

The insertion sensors of the SCT-190 series can also be used to measure temperature in SCFT-xxx-02-02 turbine flowmeters.

Device features:
- High pressure-resistant temperature probe
- Temperature measurement up to 1000°C
- Flexible use
- Pressure peaks logged
- Screw-in or bulb sensor

Catalogue 4054

SCT Temperature Measurement - CAN

Temperature measurements in hydraulics are useful for searching for faults and for avoiding damage following too high temperatures in critical components such as pumps or proportional valves.

In order to carry out a precise temperature measurement, the temperature is measured directly in the tube or hose line.

The insertion sensors of the SCT-190 series can also be used to measure temperature in SCFT-xxx-02-02 turbine flowmeters.

Device features:
- High pressure-resistant temperature probe for measuring hydraulics
- Temperature measurement up to 150°C
- Flexible use
- Insertion sensor
- Sensor identification light ring
- Accuracy ± 0.66 %
- Quick plug/screw connection SPEEDCON®
- Suitable for long cable lengths

SPEEDCON® Registered trademark of the PHÖNIX CONTACT GmbH & Co company. KG

Catalogue 4054

kovaz

SCRPM Speed Measurement - Analog

Performance data that depends on the rotation speed, such as the delivery rate of regulated pumps, are ideally transmitted along with the pressure and the flow rate measurement of a hydraulic drive.

Contactless speed measurement (optoelectronic principle) is fast and easy to implement.

The rotation speed is measured, e. g. at a drive shaft, and shown on the measuring instrument. No adjustment needed.

Device features:
- Also for contactless rotation speed measurement
- Speed measurements up to 10,000 RPM
- With 3-m fixed cable

SCFT Turbine Flowmeter - Analog

A turbine wheel is driven by the oil flow and thus set in motion. The frequencies produced are processed by a digital electronic device. The influence of disturbing flow effects is thus compensated. With the lower flow resistance Q_R, the hydraulic circulation operates at low loss.

The turbine flowmeter is equipped with an EMA-3 quick connect coupling to measure the pressure.
Oil temperatures can be directly measured from the oil flow in the turbine flowmeter. Thus, all the important measured values are gathered in one location.

Device features:
- 6 measuring ranges up to 750 l/min
- Easy assembly
- Resistant to high pressure up to 480 bar
- Low flow resistance
- Integrated pressure and temperature measurement points
- Suitable for reverse mode

kovai

R

SCFTT CAN Turbine Flowmeter

A turbine wheel is driven by the oil flow and thus set in motion. The frequencies produced are processed by a digital electronic device. The influence of disturbing flow effects is thus compensated. With the lower flow resistance Q_R, the hydraulic circulation operates at low loss.

The turbine flowmeter is equipped with an EMA-3 quick connect coupling to measure the pressure.

Oil temperatures are directly measured from the oil flow in the turbine flowmeter. Thus, all the important measured values are gathered in one location.

Device features:
- Turbine flowmeter with integrated temperature sensor in CAN bus technology
- 6 measuring ranges up to 750 l/min
- Easy assembly
- Resistant to high pressure up to 480 bar
- Low flow resistance
- Integrated pressure and temperature measurement points
- Suitable for reverse mode
- Simple wiring with SPEEDCON®
- Suitable for long cable lengths
- Sensor identification LED

SCLV Hydraulics Tester - Analog and CAN

Hydraulics testers test the functions of motors, pumps, valves, and hydrostatic drives. These easy-to-handle hydraulic testers can help locate faults in a hydraulic system.

Hydraulic testers can be used for a precise measurement of pressure, temperature, and flow rate when performing maintenance work on hydraulic systems and to locate the source of faults in regulated directional control valves and in the placement of valves.

The pressure loading valve with integrated bursting discs allows pressure to build up progressively to test the flow rate over the whole work area.

Device features:
- 2 measuring ranges up to 750 l/min
- Resistant to high pressure up to 480 bar
- Integrated overload protection
- Reverse mode (flow direction A-B)
- Also with a CAN bus connection
- CAN version with integrated temperature sensor
- Connections for pressure and temperature sensors possible

Kovai

SCQ Flowmeter - Analog

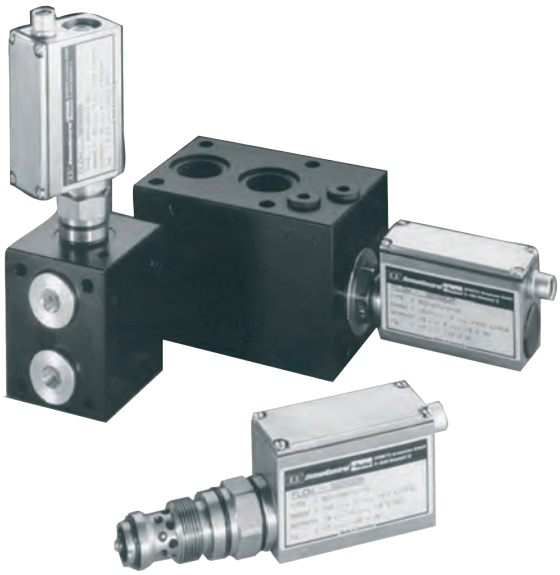

In high pressure hydraulics, a rapid identification of the rate of flow is very important. Thanks to the quick response time of the flowmeter, the dynamic behavior of hydraulic systems can be measured.

The direction indicator is helpful when searching for faults in the hydraulic system.

Quick load changes that cause damage, for example, to valves or pumps, can be identified. Assembly with the connector block allows the combined measurement of p, T, and Q. The IN-LINE adaptor for pipe or hose assembly ensures the quick integration of the flowmeter into the hydraulic system. The robust construction also permits application in extreme conditions, such as a high load change or speeds of pressure increase.

Device features:
- Spring/piston system
- Flowmeter with direction indicator
- Response time ≤ 2 ms
- Compact construction
- Pressure-resistant up to 420 bar
- Wide range of viscosity
- p, T, and Q measurements possible with connector block

SCVF Volume Counter

The **SCVF** is a volume counter for highly accurate flow measurements in hydraulic installations. A very precisely worked gear pair is driven by the fluid flow.

The **SCVF** works in a wide range of viscosity. Different thicknesses allow a variety of applications.

Thanks to the wide range of viscosity, all pumpable fluids with a certain degree of lubricity can be measured:
- mineral oils
- hydraulic oils
- grease
- brake fluid (EPDM sealing)
- Skydrol (special version)

If you need to gather exact flow measurements from a wide range of viscosity, the **SCVF** volume counter is the ideal solution.

Device features:
- Measurement principle: volume/gear counter
- 4 measuring ranges up to 300 l/min
- Measurement accuracy ± 0.5 % FS
- Pressure-resistant up to 400 bar
- Wide range of viscosity
- Quiet
- Exact flow measurement over a wide range of viscosity
- Flexible use of different media

R

SPEEDCON® Registered trademark of the PHÖNIX CONTACT GmbH & Co company. KG

SCPSDi Pressure Switch

The **SCPSDi** is an electronic pressure switch with:

- Pressure display
- 2 programmable switching outputs
- Optional analog output signal
- IO-link interface
- VDMA menu navigation

The new construction concept and the resulting assembly possibilities combined with multiple connection options are the most important characteristics of the **SCPSDi**.

This unique scope of functions makes the **SCPSDi** ideal for long-term series use in industrial applications.

Device features:

- IO-Link
- VDMA menu
- ECO Mode
- Rotating >360°
- 180° reversible display
- Analog output V/mA
- Reliable operation thanks to LOCK
- Compact
- Robust
- MPa, bar, PSI
- Metal housing
- Mounting width 35 mm
- Mounting height 78 mm

Controller Family

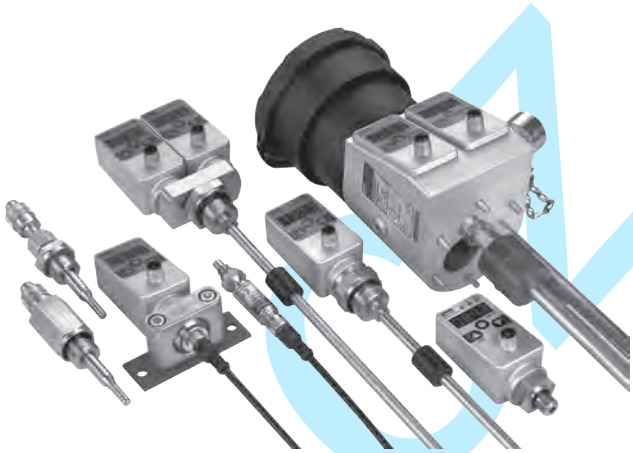

Controllers are used in control, management, and monitoring systems in which switch or analog signals or a display is/are necessary.

The controllers can replace:

- mechanical switches
- mechanical displays (manometers, thermometers, gauge-glasses)
- sensors

and combine all the functions of the above-named components in a single device.

Device features:

- Large display
- Freely adjustable
- Robust metal design
- Compact
- Long term stability
- Reliable
- Resistant to interference

kovaX

SCPSD PressureController

The PressureController combines the functions of a pressure switch, a pressure sensor, and a display unit:

- Pressure display (manometer)
- Switching outputs
- Analog signal

Simple operation, compact construction and high reliability are the most important characteristics of the PressureController. The PressureController offers exceptional technical data and optimum pressure management, combined with various assembly options. It is therefore ideal for long-term series use in industrial applications.

Each switching output can be configured individually:

- Normally open/normally closed contact
- On/off switching pressures
- Delay times
- Hysteresis/window function
- Attenuation

These comfortable switch functions enable intelligent configurations which are not possible with mechanical switches. Thus, several switches can be replaced by a single controller.

Device features:

- Compact
- Robust
- Reliable
- Easy operation
- Long term stability
- Excellent interference resistance
- Metal housing
- High protection class
- Many versions
- Rotating
- Analog output
- Password
- MPa, bar, PSI

DESINA

c UL us LISTED

DNV

Catalogue 4083

SCTSD TemperatureController

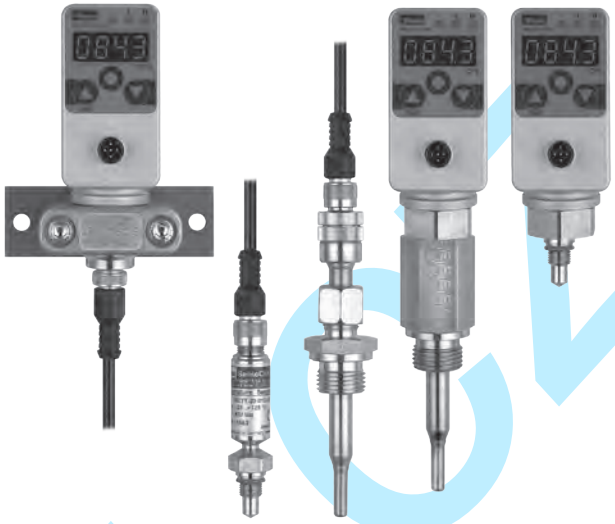

The TemperatureController combines the functions of a temperature switch, a temperature sensor, and a display unit:

- Temperature display (thermometer)
- Switching outputs
- Analog signal

Simple operation, varied functionality, and a modular design are the most important characteristics of the TemperatureController. The TemperatureController offers exceptional technical data and optimum temperature management, combined with various assembly options. It is therefore ideal when the temperature must be safely monitored and clearly displayed.

Each switching output can be configured individually:

- Normally open/normally closed contact
- On/off switching pressures
- Delay times
- Hysteresis/window function
- Time delay

These comfortable switch functions enable intelligent configurations which are not possible with mechanical switches. Thus, several switches can be replaced by a single controller.

Device features:

- Compact
- Robust
- Reliable
- Metal housing
- Modular design
- Many versions
- Analog output
- Rotating
- Password
- °C, °F

DESINA

Catalogue 4083

R

SCTSD-L Combination Switch

The **SCTSD-L** combination switch was devised around the requirements of hydraulic unit constructions and combines the functions of a fixed mechanical level switch with those of a configurable electronic temperature switch with a display.

Level
The tank level is measured by a highly dynamic and fully encapsulated magnetic float and switches the bistable dry reed contacts. The M12 pin assignment is compatible with conventional systems. The level contacts are firmly preset according to normal tank sizes. Two standard switching output versions are available.

Temperature
The temperature is measured via the temperature sensor and assessed by the SCTSD TemperatureController and continually displayed. These comfortable switch functions (e. g. window function) enable intelligent configurations which are not possible with mechanical temperature switches.

Device features:
- Compact construction
- Temperature display
- Individually configurable temperature switch outputs
- Small switching hysteresis
- Preset
  - for standard oils
  - for cooling
  - for shutdown (T_{max})
- Fixed level contacts
- Bistable contacts
- Preset level
  - Warning and shutdown min
  - Shutdown min/max
- Up to 1 m bar length

DESINA

Catalogue 4083

SCLTSD LevelTempController

The LevelTempController enables the temperature and the level to be configured and displayed separately on the same platform. When monitoring the tank, this integration of level and temperature functionality opens up many possibilities.

The LevelTempController combines the functions of a level/temperature switch, a level/temperature sensor, and a level/temperature display:
- Level/temperature display
- Switching outputs
- Analog signal

Level
The position of the float is finely graduated (≥ 5 mm) and continually logged and shown in mm or inches in the display. The continual logging of the level means that there is no risk of individual mechanical contacts 'sticking'. This greatly increases the operational safety of the monitored installation.

Temperature
The temperature in the medium is continually logged and shown on the display. As with the LevelController, all switching outputs can be configured individually. In addition, all the comfortable switching functions are available, including the window and hysteresis functions, normally open and normally closed contacts, and an analog output for temperature.

Device features:
- Proven measurement system
- Rotating
- Level display
- mm/inch/% display
- High & low display
- Analog output
- Switching outputs
- One borehole only
- No surge pipe necessary
- Replaces several mechanical switches

DESINA

Catalogue 4083

SCLSD LevelController

The LevelController combines the functions of a level switch, a level sensor, and a level display:
- Level display (gauge-glass)
- Switching outputs
- Analog signal

The LevelController is best suited for monitoring tank levels.

A variety of applications can be comfortably implemented or subsequently corrected through the menu-driven configuration of the level switching points. As the switching points no longer need to be given when ordering, the usual variability found in mechanical level switches is reduced.

Each switching output can be configured individually:
- Normally open/normally closed contact
- Higher/lower level switching point
- Delay times
- Hysteresis/window function
- Attenuation

These comfortable switch functions enable intelligent configurations which are not possible with mechanical switches. Thus, several switches can be replaced by a single controller.

Device features:
- Proven measurement system
- Level display
- mm/inch/% display
- High & low display
- Analog output
- Switching outputs
- No surge pipe necessary
- Replaces several mechanical switches
- Rotating

DESINA

Catalogue 4083

SCOTC OilTankController

In addition to the LevelTempController, the OilTankController offers standardized connections for an air filter and a filling coupling.

When monitoring the tank for series use, this integration of level and temperature functionality together with air filter and fill adapter port opens up many possibilities. Only one connecting bore is needed for four functions.

The OilTankController combines the functions of a level/temperature switch, a level/temperature sensor, and a level/temperature display:
- Level/temperature display (Thermometer/gauge-glass)
- Switching outputs
- Analog signal

Each switching output can be configured individually:

A variety of applications can be comfortably implemented or subsequently corrected through the menu-driven configuration of the level switching points. As the switching points no longer need to be given when ordering, the usual variability found in mechanical level switches is reduced.

Device features:
- Proven measurement system
- Level/temperature display
- mm/inch/% display
- High & low display
- One borehole only
- Continual level measurement
- Connection
  - Filling coupling
  - Air filter
  - Negative pressure
- No surge pipe necessary

DESINA

Catalogue 4083

R

SCP01 Pressure Sensors

The **SCP01** pressure sensor was designed for the requirements of industrial applications and is used for control, management, or monitoring systems.
The **SCP01** is characterized by its compact form, high linearity, and excellent interference resistance. Thanks to its speed of response, the **SCP01** is also used for rapid control processes. The compact stainless steel housing is designed for harsh ambient conditions. All parts in contact with the medium are manufactured from stainless steel and, in combination with welded thin-layer measuring cell, ensure high medium compatibility. All electronic parts are encapsulated as protection against vibrations and humidity.

An EDM hole is integrated in order to ensure an exact pressure measurement free from interference. It minimizes air cavitation and thus protects the measuring cell from any pressure blows or pressure peaks that may occur.

Thanks to its long life, high accuracy, high reliability, and robust stainless steel construction, it is the device best suited for sustained series use in hydraulic applications.

Device features:
- Small construction
- Stainless steel measuring cell
- Stainless steel housing
- Resistant to shock and vibrations
- Wide-ranging media compatibility
- High linearity
- Long term stability
- Medium temperature -40 ... 125 °C
- Up to 1000 bar
- High burst pressure
- 1 ms
- EDM-drilling
- Encapsulated electronic parts

Catalogue 4083

Pressure sensors SCP02

The **SCP02** was specially designed for use in mobile work machines. For this, the **SCP02** has received e1 approval and is manufactured with the latest manufacturing methods, in accordance with ISO/TS 16949.

Its resistance to shock and vibrations, EMC properties, power supply, and wider temperature range have been designed for this area of application.

Thanks to its speed of response, the **SCP02** can also be used for rapid control processes.

The compact stainless steel housing and the plastic plug enable use in harsh ambient conditions, such as are found in mobile hydraulics.

All parts in contact with the medium are manufactured from stainless steel (1.4548) and, in combination with the welded thin-layer measuring cell, ensure high medium compatibility.

An EDM hole is integrated in order to ensure an exact pressure measurement free from interference. It minimizes air cavitation and thus protects the measuring cell from any pressure blows or pressure peaks that may occur.

Device features:
- Small construction
- Stainless steel measuring cell
- Stainless steel housing
- Resistant to shock and vibrations
- High degree of protection
- E1 road approval
- Medium temperature -40 ... 150 °C
- Up to 1000 bar
- 1 ms
- Up to 36 V wiring systems

Catalogue 4083

SCPS01 Pressure Switch

The **SCPS01** electronic pressure switch was conceived for use in series machines.

In order to make assembly more straightforward, the pressure switches can be pre-programmed to client-specific values upon request. Time-consuming adjustments or configuration under pressure are therefore unnecessary. The system manufacturer can configure the pressure switches by software. This excludes the possibility of an unauthorized end user manipulating the switch.

The pressure switches do not contain any mechanical moving parts. All parts in contact with the medium are made out of stainless steel and, in combination with the welded thin-layer measuring cell, ensure high medium compatibility. A cushioning mechanism can be optionally integrated in the medium inlet. The stainless steel housing enables use in extremely harsh ambient conditions.

In order to ensure a wide field of use, the EMC properties and shock and vibration resistance are configured for use in mobile work machines. The e-1 approval even permits the **SCPS01** to be installed in vehicles used on public roads.

Thanks to their robust and compact construction, combined with their long-term stability and attractive price, the **SCPS01** are the alternative to mechanical pressure switches.

Device features:
- Long life
- No re-adjustment
- Engineered for harsh environments
- Precise switching

Catalogue 4083

SCP-EX Pressure Sensors

The **SCP-EX** can be configured for Zone 1 and conforms with Directive 94/9/EC. Thanks to the appropriate protective circuits, polarity reversal protection, overvoltage protection, and power dissipation limitation will be activated in the case of a fault. Its wide-reaching industrial application options are guaranteed through high accuracy and a robust and compact construction.
Various pressure transducers are available thanks to its compatibility with different mechanical and electrical connections.

For Zone 1, in which explosive atmospheres, such as a mix of inflammable compounds in the form of gas, steam, or haze and air, sometimes occur in normal operation. It is essential to adhere to the relevant national safety regulations when assembling, commissioning, and operating these pressure transducers.

Device features:
- Measuring ranges 0 ... 1000 bar
- ATEX approval for Zone 1
  - II 2G Ex ia IIC T4
- Output signal 4 ... 20 mA
- High reliability

Catalogue 4083

SCT-150 Temperature Sensors

A compact construction and high pressure resistance characterize the **SCT-150** electronic temperature sensor.

If the temperature needs to be measured under high pressure and a compact construction is necessary, the **SCT** can be used.

Thanks to its pressure resistance up to 630 bar, the **SCT** temperature sensor is suited to the needs of hydraulic applications.

It performs precise and quick temperature measurements.

The temperature sensors in the **SCT** series are compatible with the **SCE** panel measuring instruments. This allows the medium temperature as well as the hydraulic pressure to be measured, controlled, and evaluated.

Device features:
- Pressure-resistant up to 630 bar
- Compact construction
- Robust steel housing
- Easy assembly
- -25 °C ... +100 °C

Catalogue 4083

SCE-020 Digital Display Unit

Multiple connections, a flexible display and numerous outlets characterize the **SCE** digital display unit.
The **SCE-020** converts analog standard signals (in 0 ... 10 V to 0/4 ... 20 mA ranges) into easily understood measurement values/units.

Thus, the **SCE-020** can easily display any sensor (pressure, temperature, torque, length etc.) desired.

The display can be read from a great distance. In order to present different measuring values, the desired measurement range and the decimal point can be set easily and in a user-friendly way. Additional units are shown on a separate illuminated surface. The power supply can range from 11 to 30 VDC. An adjustable limit value can be monitored through the potential-free switching output. The analog output and the RS232 series interface can forward the signal to a corresponding peripheral device. If different measuring values need to be presented easily and in a flexible manner, the **SCE-020** display unit can be used.

Device features:
- Easily readable digital display:
  - large
  - bright
- Programmable
- Free choice of unit
- Input:
  - current 0/4 ... 20 mA
  - voltage 0 ... 10 V
  - frequency 0 ... 8 kHz
- Switching output
- Loopthrough function:
  - analog output
  - series interface
- Standard housing 96 x 48 mm

Catalogue 4083

SCK Cable

SensoControl® cables are designed according to the requirements of industrial sensors and switches.

M12 cables and M12 plugs are therefore usually
- compact
- screened
- 5-pin

5-pin design
The 5-pin cables are suitable for both 4 and 5-pin connections. 5-pin cables are fully compatible with sensor versions with 4-pin plugs.

This means that a (5-pin) cable design can always be used for pressure switches (Controller Family SCxSD & SCOTC) and sensors irrespective of the plug version and the different number of pins.

The SCK-400-xxx-x5 cables are compatible with all components with M12 plug connections.

Shielding
The screening ensures high interference resistance and operational safety.
- High EMC protection

Device features:
- One cable for everything
- Compact
- Resistant to interference
- Compatible with:
  - sensors
  - controllers
- M12 plugs
- DIN EN 175301 (connector plugs)
- Different lengths

Catalogue 4083

kovaz.cz

R

For your notes

Dan Technology
kovaz.cz

Parker

Ermeto Original
Tubes

kovaz.cz

General recommendations for tubes

1. Steel types, mechanical properties, conditions

Steel types, mechanical properties and conditions of EO steel tubes

Steel type	Tensile strength Rm	Yield point ReH	Ductile yield A5 (longit.)	Condition
Fine grain E235N acc. to EN 10305-4 (St. 37.4 acc. to DIN 1630/DIN 2391 old designation)	340 N/mm² min. 49,000 lb/in²	235 N/mm² min. 34,000 lb/in²	25% min.	Seamless, cold drawn, normal annealed, DIN EN 10305-1 and -4

Steel types, mechanical properties and conditions of EO stainless steel tubes

Steel type	Tensile strength Rm	Yield point (1% proof stress)	Ductile yield A5 (longit.)	Condition
1.4571 X6CrNiMoTi17122	500 N/mm² min. 72,500 lb/in²	245 N/mm² min. 35,500 lb/in²	35% min.	Seamless, cold drawn free of scale, heat treated in accordance with DIN EN 10216-5 tab. 6

2. Tests and certifications
All tubes are subjected to a non-destructive leak test and marked accordingly as proof. This marking replaces a works certificate DIN EN 10204-2.2. Test class 1 DIN EN 10216-5 Table 7 applies for tubes made of 1.4571.

3. Recommended bend radius
A bend radius of 3x the external tube diameter is recommended for cold bending of tubes with tube benders or by hand.

4. Welding suitability and weldability
Tubes of E235N are weldable according to usual techniques. Types made of 1.4571 (stainless) are suitable for arc welding. The welding filler should be selected in accordance with DIN EN 1600 and DIN EN 12072 part 1 taking into account the type of application and the welding technique.

5. Approximate calculation of the flow resistance in straight tubelines
The flow resistance and thus the tubeline efficiency is influenced by the tube inside diameter, the volume flow (measured or calculated) and the properties of the medium. Laminar flow should be considered in order to keep losses in the system down to a minimum. The transition from laminar to turbulent flow, which brings an increase in the flow resistance is generally defined by the Reynolds number Re 2320. Since the transition cannot be pinpointed exactly, the transition range can only be determined by measuring. If, for simplified calculation, transition at Re 2320 and a "technically smooth" tube inner surface are assumed, the limit speeds w crit. and the laminar to turbulent flow volume flow $\dot{V}$ crit. when transition takes place, can be estimated according to the following formulas:

$$w_{crit.} = \frac{2.32 \cdot \upsilon}{d_i} \text{ [m/s]}$$

$$q_{v,\,crit.} = 0.109 \cdot d_i \cdot \upsilon \text{ [l/min]}$$

d_i = tube bore Ø in mm

υ = kinematic viscosity in mm²/s

For approximate calculation of the pressure drop in bar/1 m tube length, the following formulas can be used:

1. Laminar range:

$$p_v = \frac{0.32 \cdot w \cdot \upsilon \cdot \rho}{d_i^2 \cdot 10^3} = \frac{6.79 \cdot q_v \cdot \upsilon \cdot \rho}{d_i^4 \cdot 10^3} \text{ [bar/1 m]}$$

2. Turbulent range:

$$p_v = \frac{0.281 \cdot w^{1.75} \cdot \upsilon^{0.25} \cdot \rho}{d_i^{1.25} \cdot 10^3}$$

$$= \frac{59 \cdot q_v^{1.75} \cdot \upsilon^{0.25} \cdot \rho}{d_i^{4.75} \cdot 10^3} \text{ [bar/1 m]}$$

w = flow speed in m/s; υ = kinetic viscosity in mm²/s; q = volume flow in l/min.; ρ = density of the medium in kg/m³; d_i = pipe internal diameter in mm.
Detailed calculations of the flow resistance require an exact knowledge of the tubeline system and the operating conditions. Refer to the relevant literature for other methods of calculations.

S

Tube and pipe specification

Recommended carbon steel tubes and pipes
Parker recommends the use of cold drawn seamless and regular annealed (abbreviation +N) hydraulic tubes and pipes acc.:
DIN-EN 10305 (old DIN 2391) and ISO 3304
For the assembly of steel fittings, steel tubes made of material E235 (ST37.4 +N) and E355 (ST52.4 +N) are recommended.

+ precision dimension/shape
+ high pressure capability
+ clean inside (no scale)
+ excellent scaling surface after roll flaring

Recommended stainless steel tubes and pipes
Parker reccommends the use of seamless cold drawn stainless steel tubes and pipes acc. to:
DIN EN 10216-5, ASTM A269/A213, ASTM A312.

EO precision stainless steel tube meets and exceeds these standards. The tolerances of the pipe outer diameter and wall thickness are even closer to ensure a safe interplay with our fitting systems.

For the assembly of stainless steel tube fittings, EO precision stainless steel tubes made of material 316 Ti and 316L are recommended.

+ precision dimension/shape
+ high pressure capability
+ excellent scaling surface after roll flaring

Welded tubes and pipes
Tubes and pipes acc. to below specification but welded and cold redrawn instead of seamless drawn are usually suitable.
Pressure capability might be reduced due to the welding seam zone.
Welding seam quality might effect roll flaring surface results.

Hot rolled pipes
Hot rolled pipes are not recommended for the following reasons:
Hot rolled pipes do not have precision dimensions and may slip in machine dies.
They have scales inside and outside. The inside scales effect the cleanliness level of the fluid and reduces fatigue levels. Used in roll flaring process the scales will contaminate the flaring tools (high cleaning effort) and cause poor flare surface quality.

The required maximum working pressure is calculated either acc. to DIN or DNV.

Material specifications & values

E235+N / St.37.4 (1.0308) acc. to DIN EN 10305-4	
Tensile strength	min. 340 N/mm²
Yield strength	min. 235 N/mm²
Fatigue strength	225 N/mm² [1]
Elongation at break	min. 25%

E355+N / St.52.4 (1.0580) acc. to DIN EN 10305-4	
Tensile strength	min. 490 N/mm²
Yield strength	min. 355 N/mm²
Fatigue strength	265 N/mm² [2]
Elongation at break	min. 22 %

316Ti (1.4571) cold drawn (CFA) acc. to DIN EN 10216-5	
Tensile strength	min. 500 N/mm²
0.2 % proof stress	min. 210 N/mm²
1 % proof stress	min. 245 N/mm²
Fatigue strength	220 N/mm² [2]
Elongation at break	min. 35 %

316L (1.4404) cold drawn (CFA)[3] acc. to DIN EN 10216-5	
Tensile strength	min. 500 N/mm²
0.2 % proof stress	min. 210 N/mm²
1 % proof stress	min. 245 N/mm²
Elongation at break	min. 35 %

316L (1.4404) acc. to ASTM A269 / A213	
Tensile strength	min. 530 N/mm²
Yield strength	min. 276 N/mm²
0.2 % proof stress / 1.6 [4]	172.5 N/mm²

316L (1.4404) acc. to ASTM A312 / A530	
Tensile strength	min. 515 N/mm²
Yield strength	min. 234 N/mm²
0.2 % proof stress / 1.6 [4]	146 N/mm²

[1] DIN 2413, 6.331
[2] No standard value, Experience value
[3] Strength increase due to cold forming following 1.4571
[4] Pressure rating calculation based on this mechanical properties require certification according to 3.1 - EN 10204 that confirmes the mechanical properties.

Tube calculation for industrial and mobile applications acc. to DIN rules

DIN 2413 I, only for static load

Calculation of working pressure of steel tubes for static stress up to 120°C. Corrosion - additional allowancess are not considered for the calculation of pressures. Tubes with a diameter of OD/ ID > 2 are calculated for static stress in accordance with DIN 2413 III, but with K = yield strength.

$$P = \frac{20 * K * s * c}{S * D}$$

P = permissible working pressure [bar]
K = yield strength [N/mm²]
s = tube wall thickness [mm]
c = factor for wall thickness allowance
= 0.8 for Tube-OD 4-5
= 0.85 for Tube-OD 6-8
= 0.9 from Tube-OD 10
= 0.9 for all stainless steel tubes
S = Safety factor = 1.5
D = tube outside diameter [mm]

Burst pressure calculation

Calculation of static burst pressure for seamless tubes acc. to Faupel-von-Mises.

$$BP = R_{p0.2} * 10 \frac{2}{\sqrt{3}} \ln \frac{D}{d} * (2 - \frac{R_{p0.2}}{R_m})$$

BP = Min. static burst pressure [bar]
R = tensile strength [N/mm²]
R_{p02} = 0.2% proof stress, yield strength [N/mm²]
D = Tube outside diameter [mm]r
d = Tube inside diameter [mm]

DIN 2413 III, for dynamic load

Calculation of working pressure of steel tubes for dynamic stress up to 120°C.
Corrosion - additional allowances are not considered for the calculation of pressures.

$$P = \frac{20 * K * s * c}{S * (D + s * c)}$$

P = permissible working pressure [bar]
K = fatigue strength [N/mm²]
s = tube wall thickness [mm]
c = factor for wall thickness allowance
= 0.8 for Tube-OD 4-5
= 0.85 for Tube-OD 6-8
= 0.9 for Tube-OD 10-80
= 0.9 for all stainless steel tubes
S = safety factor = 1.5
D = tube outside diameter [mm]

Tube calculation for marine and offshore acc. to DNV rules

Calculation of working pressure of steel and stainless steel tubes for ship building acc. to DNV Part 4, Chapter 6, Section 6.

$$P = \frac{20 * \sigma_t * e * t_0}{D - t_0}$$

Calculation of burst pressure:

$$BP = \frac{20 * R_m * t_n * a}{D - t_n * a}$$

P = permissible working pressure [bar]
BP = approximate burst pressure [bar]
σ_t = permissible stress [N/mm²] calculated from the lower value off:

stainless steel: $\sigma_t = \frac{R_m}{2.7}$ or $\frac{K}{1.6}$

carbon steel: $\sigma_t = \frac{R_m}{2.7}$ or $\frac{K}{1.8}$

t_0 = tube wall thickness without allowences [mm]

$t_0 = t_n \cdot a - c - b$

t_n = tube wall thickness nominal [mm]
a = factor for wall thickness allowence
= 0.8 for Tube-OD 4-5, 0.85 for Tube-OD 6-8, 0.9 for Tube-OD >=10
= 0.875 for Schedule Pipes
= 0.9 for all stainless steel tubes
b = bending allowence

$b = \frac{1}{2.5} * \frac{D}{R} * t_0$

$b = 0.1333 * t_0$ (at R/D=3) $\rightarrow$ $t_0 = \frac{t_n * a - c}{1.1333}$

c = corrosion tolerance, c = 0.3 mm for hydraulic steel tube, c = 0 mm for SS tubes
e = strength ratio: for seamless tubes e = 1
D = tube outside diameter [mm]
R_m = min. tensile strength [N/mm²]
K = min. yield strength or min 0.2% proof stress [N/mm²]

Pressure reductions and temperatures

Required pressure reductions (depending on the material) with reference to the catalogue pressures for higher temperatures.
Both metal fitting material and elastomeric sealing compound have to be selected according to the temperature range of the system.

DNV may require different pressure reduction based on application

Material	Pressure reduction of permissible operating temperatures TB in °C														
	-60	-54	-40	-35	-25	+20	+50	+100	+120	+150	+175	+200	+250	+300	+400
Steel components			10%			0%				11%	19%				
Steel, tubes			10%			0%				19%			27%		
Stainless steel components	0%						5%	15%	23%		29%		33%	37%	42%
Stainless steel, tubes	0%						5.5%	11.5%	21.5%				29%		34%
Sealing material NBR (e.g. Perbunan)															
Sealing material FKM															
Sealing material Polyurethan (P5008)															

Permissible
Ambient temperature of hydraulic and pneumatic applications
Temperature not permissible

Calculation example:
Temperature = 200°C
Material = Stainless steell
Pressure reduction = 29%
Pressure reduction tubes = 21.5%
PN tube 16x2.5/71. DIN2413 III = 362 bar

Formula:

$$PN_{200°C} = \frac{400\ \text{bar}}{100\%} \times (100\% - 29\%) = 284\ \text{bar}$$

$$PN_{\text{tube } 200°C} = \frac{362\ \text{bar}}{100\%} \times (100\% - 21.5\%) = 284\ \text{bar}$$

Flow diameter of tube lines

Determining tube sizes for hydraulic systems

Proper tube material, type and size for a given application and type of fitting are critical for efficient and trouble-free operation of the fluid system. Selection of proper tubing involves choosing the right tube material, and determining the optimum tube size (O.D. and wall thickness).

Proper sizing of the tube for various parts of a hydraulic system results in an optimum combination of efficient and cost effective performance.

A tube that is too small causes high fluid velocity, which has many detrimental effects. In pressure lines, it causes high friction losses and turbulence, both resulting in high pressure drops and heat generation. High heat accelerates wear in moving parts and rapid aging of seals and hoses, all resulting in reduced component life. High heat generation also means wasted energy, and hence, low efficiency. Too large tubes increase system cost. Thus, optimum tube sizing is very critical. The following is a simple procedure for sizing tubes.

Determine required flow diameter
Use table to determine recommended flow diameter for the required flow rate and type of line.

The table is based on the following recommended flow rates that are common in the shipbuilding and offshore engineering.

Pressure lines – 3 →7.2 $\left[\frac{m}{s}\right]$

Return lines – 2 →4.5 $\left[\frac{m}{s}\right]$

Suction lines – 1 →1.8 $\left[\frac{m}{s}\right]$

Avoid flow rates > 8 m/s!
The resulting forces are high and can destroy the tube lines.
If you desire to use different velocities than the above, use the following formula to determine the required flow diameter.

$$\text{Tube – I.D. [mm]} = 4{,}61 \times \sqrt{\frac{\text{Flow } \left[\frac{\text{ltr.}}{\text{min}}\right]}{\text{Velocity } \left[\frac{m}{s}\right]}}$$

Determine required wall thickness

Use tube/pressure calculation tables shown in the tube chapter to determine recommended wall thickness for the required working pressure and flow diameter of the line.
Therefore choose a working pressure which is equal or higher than the required working pressure.

Flow characteristics

Hydraulic systems are in most cases only rated with a flow velocity defined on the basis of experience. The pressure losses in lines are not taken into account, or measured later on when testing the system. As the pressure losses increase porportionally greater than the flow resistance, it is important to achieve the best rating of the system, so that they are already taken into account when planning the tube connections. Calculation is not as difficult as it is often thought, and this chapter is intended to provide a guideline. Besides, it provides information on how excessive pressure losses can be avoided, because pressure losses result in losses in performance and excessive heat. Noise occurs and possibly cavitation in suction lines.

Medium

All indication given with regard to flow restrictions and to flow properties refer exclusively to liquids. For gaseous media, the variable density of the gas must additionally be taken into account.

Units

c = Flow velocity $\left[\frac{m}{s}\right]$

d = Pipe inside diameter [m]
L = Pipe length [m]
p = Pressure [Pa], 1 bar = 100000 Pa

$\dot{V}$ = Flow rate $\left[\frac{m^3}{s}\right]$, $1\frac{m^3}{s} = 60000\frac{l}{min}$
λ = Pipe friction factor

$\upsilon(T)$ = Kinematic viscosity of the medium depending on temperature $\left[\frac{m^2}{s}\right]$

$\rho(T)$ = Density of the medium depending on temperature $\left[\frac{kg}{m^3}\right]$

ζ = Individual pressure loss coefficient

Only base units have been used. This has the advantage that the formula do not contain correction factors and there is no danger of confusion, e.g. that values are used with the wrong unit. In case values are given in other units - the flow rate is e.g. often given in l/min - it is advisable to convert them into the base units before starting calculation.

Pressure losses in pipe lines

To calculate pressure losses in pipe lines, it must first be determined whether there is a laminar or a turbulent flow. Laminar flow is homogenous and without turbulance. In case of turbulent flow, the losses increase much more quickly.

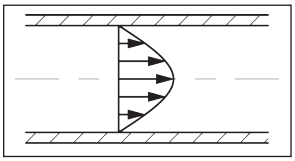

Flow profile with laminar flow

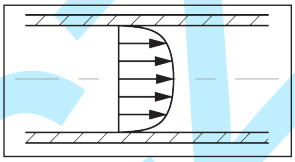

Flow profile with turbulent flow

The kind of flow is defined by the Reynolds' number. With a Reynolds' number of more than 2320, the flow changes to turbulent. The Reynolds' number is calculated according to the formula:

$$Re = \frac{c \cdot d}{\upsilon(T)}$$

The Reynolds' number is a non-dimensional number. The critical fluid velocity at which the flow regime can change, is thus calculated from:

$$c_{cr} = 2320 \cdot \frac{\upsilon(T)}{d} \left[\frac{m}{s}\right]$$

With a given flow rate, the fluid velocity can be calculated according to the formula:

$$c = \frac{\dot{V} \cdot 4}{d^2 \cdot \pi} \left[\frac{m}{s}\right]$$

Subsequenctly, the pipe friction factor λ can be calculated. The pipe friction factor λ is a function of the Reynolds' number and also depends on the roughness of the pipe. As hydraulically smooth pipes can generally be assumed in hydraulic applications, the pipe friction factor λ is calculated according to the following formula:

$$\text{laminar flow, } (Re < 2320): \lambda = \frac{64}{Re}$$

$$\textit{turbulent flow, } (Re > 2320): \lambda = \frac{0.3164}{\sqrt[4]{Re}}$$

Finally, if all factors are known, the pressure loss in a certain pipe line can be calculated according to the formula:

$$\Delta p = \lambda \cdot \frac{L}{d} \cdot \frac{\rho(T) \cdot c^2}{2} \text{ [Pa]}$$

Calculation of individual losses

A hydraulic system does not only incorporate pipes, but also valves, fittings, pipe bends etc. that cause flow losses. These individual losses are often much higher than the pipe losses and are calculated according to the following formula:

$$\Delta p = \zeta \cdot \rho(T) \cdot \frac{c^2}{2} \text{ [Pa]}$$

Kovaz.cz

S

Seamless EO steel tubes | Material E235+N / St.37.4 (1.0308)

Acc. to DIN EN 10305-4

1. DIN 2413 I: Tubes with a diameter of OD/ID>2 are calculated for static stress in accordance with DIN 2413 III but with K=yield strength.
2. Evaluated in Parker Lab and Test Field. ( ) = Burst pressure (B.P.) acc. to Faupel-von-Mises

Material E235+N / St.37.4 (1.0308)		d_a Outer-Ø (mm)	Outer-Ø Tolerance (mm)	s Wall-thickness (mm)	d_i Inner-Ø (mm)	Desgin pressure		2 Burst pressure bar	Weight kg/m
Surface						1 DIN 2413 I static PN bar	DIN 2413 III dynamic PN bar		
Phosphated and oiled	Cr(VI)-free								
Order code									
R04X0.5	**R04X0.5CF**	04	±0.08	0.50	3.0	313	273	1160	0.047
	R04X0.75CF	04		0.75	2.5	470	391	1820	0.063
R04X1	**R04X1CF**	04		1.00	2.0	627	500	2700	0.074
	R05X1CF	05	±0.08	1.00	3.0	501	414	2120	0.099
	R06X0.75CF	06	±0,08	0.75	4.5	333	288	1150	0.103
R06X1	**R06X1CF**	06		1.00	4.0	444	372	1650	0.123
R06X1.5	**R06X1.5CF**	06		1.50	3.0	666	526	2550	0.166
	R06X2CF	06		2.00	2.0	692	662	>3500	0.197
R06X2.25	**R06X2.25CF**	06		2.25	1.5	757	725	>3500	0.208
R08X1	**R08X1CF**	08	±0.08	1.00	6.0	333	288	1175	0.173
R08X1.5	**R08X1.5CF**	08		1.50	5.0	499	412	1925	0.240
R08X2	**R08X2CF**	08		2.00	4.0	666	526	2500	0.296
	R08X2.5CF	08		2.50	3.0	658	630	2650	0.339
R10X1	**R10X1CF**	10	±0.08	1.00	8.0	282	248	900	0.222
R10X1.5	**R10X1.5CF**	10		1.50	7.0	423	357	1450	0.314
R10X2	**R10X2CF**	10		2.00	6.0	564	458	2025	0.395
R10X2.5	**R10X2.5CF**	10		2.50	5.0	705	551	2675	0.462
	R10X3CF	10		3.00	4.0	666	638	>3500	0.518
R12X1	**R12X1CF**	12	±0.08	1.00	10.0	235	209	750	0.271
R12X1.5	**R12X1.5CF**	12		1.50	9.0	353	303	1150	0.388
R12X2	**R12X2CF**	12		2.00	8.0	470	391	1600	0.493
	R12X2.5CF	12		2.50	7.0	588	474	2025	0.586
	R12X3CF	12		3.00	6.0	705	551	2600	0.666
	R12X3.5CF	12		3.50	5.0	651	624	(3109)	0.734
	R14X1.5CF	14	±0.08	1.50	11.0	302	264	975	0.462
R14X2	**R14X2CF**	14		2.00	10.0	403	342	1325	0.592
R14X2.5	**R14X2.5CF**	14		2.50	9.0	504	415	1650	0.709
	R14X3CF	14		3.00	8.0	604	485	2200	0.814
R15X1	**R15X1CF**	15	±0.08	1.00	13.0	188	170	575	0.345
R15X1.5	**R15X1.5CF**	15		1.50	12.0	282	248	950	0.499
R15X2	**R15X2CF**	15		2.00	11.0	376	321	1275	0.641
R16X1.5	**R16X1.5CF**	16	±0.08	1.50	13.0	264	233	850	0.536
R16X2	**R16X2CF**	16		2.00	12.0	353	303	1175	0.691
R16X2.5	**R16X2.5CF**	16		2.50	11.0	441	370	1500	0.832
R16X3	**R16X3CF**	16		3.00	10.0	529	433	1850	0.962
R18X1	**R18X1CF**	18	±0.08	1.00	16.0	157	143	450	0.419
R18X1.5	**R18X1.5CF**	18		1.50	15.0	235	209	700	0.610
R18X2	**R18X2CF**	18		2.00	14.0	313	273	975	0.789
R18X2.5	**R18X2.5CF**	18		2.50	13.0	392	333	1300	0.956
	R18X3CF	18		3.00	12.0	470	391	1575	1.111

Surface finish:
- Tubes with I.D. 1.5-5 mm: outside and inside oiled.
- Tubes from 6 mm I.D.: outside and inside phosphated and oiled.

- Cr(VI)-free:
These dimensions are externally thick coat passivated (thickness of coat 8-12µm), inside oilded.

Seamless EO steel tubes (continued) | Material E235+N / St.37.4 (1.0308)

Acc. to DIN EN 10305-4

1. DIN 2413 I: Tubes with a diameter of OD/ID>2 are calculated for static stress in accordance with DIN 2413 III but with K=yield strength.
2. Evaluated in Parker Lab and Test Field.

Material E235+N / St.37.4 (1.0308)		d_a Outer-Ø (mm)	Outer-Ø Tolerance (mm)	s Wall-thickness (mm)	d_i Inner-Ø (mm)	Design pressure		2 Burst pressure bar	Weight kg/m
Surface						1 DIN 2413 I static PN bar	DIN 2413 III dynamic PN bar		
Phosphated and oiled	Cr(VI)-free								
Order code									
	R20X1.5CF	20	±0.08	1.50	17.0	212	190	675	0.684
R20X2	**R20X2CF**	20		2.00	16.0	282	248	900	0.888
R20X2.5	**R20X2.5CF**	20		2.50	15.0	353	303	1100	1.079
R20X3	**R20X3CF**	20		3.00	14.0	423	357	1400	1.258
	R20X3.5CF	20		3.50	13.0	494	408	1650	1.424
	R20X4CF	20		4.00	12.0	564	458	2000	1.578
R22X1.5	**R22X1.5CF**	22	±0.08	1.50	19.0	192	173	550	0.758
R22X2	**R22X2CF**	22		2.00	18.0	256	227	775	0.986
R22X2.5	**R22X2.5CF**	22		2.50	17.0	320	278	1025	1.202
	R22X3CF	22		3.00	16.0	385	328	1175	1.406
R25X2	**R25X2CF**	25	±0.08	2.00	21.0	226	201	725	1.134
R25X2.5	**R25X2.5CF**	25		2.50	20.0	282	248	850	1.387
R25X3	**R25X3CF**	25		3.00	19.0	338	292	1025	1.628
R25X4	**R25X4CF**	25		4.00	17.0	451	378	1500	2.072
	R25X4.5CF	25		4.50	16.0	508	418	1625	2.275
R28X1.5	**R28X1.5CF**	28	±0.08	1.50	25.0	151	138	425	0.980
R28X2	**R28X2CF**	28		2.00	24.0	201	181	600	1.282
R28X2.5	**R28X2.5CF**	28		2.50	23.0	252	223	750	1.572
R28X3	**R28X3CF**	28		3.00	22.0	302	264	900	1.850
	R30X2CF	30	±0.08	2.00	26.0	188	170	575	1.381
R30X2.5	**R30X2.5CF**	30		2.50	25.0	235	209	725	1.695
R30X3	**R30X3CF**	30		3.00	24.0	282	248	850	1.998
R30X4	**R30X4CF**	30		4.00	22.0	376	321	1175	2.565
R30X5	**R30X5CF**	30		5.00	20.0	470	391	1600	3.083
R35X2	**R35X2CF**	35	±0.15	2.00	31.0	161	147	450	1.628
R35X2.5	**R35X2.5CF**	35		2.50	30.0	201	181	600	2.004
R35X3	**R35X3CF**	35		3.00	29.0	242	215	700	2.367
	R35X4CF	35		4.00	27.0	322	280	960	3.058
	R38X2.5CF	38	±0.15	2.50	33.0	186	168	550	2.189
R38X3	**R38X3CF**	38		3.00	32.0	223	199	675	2.589
R38X4	**R38X4CF**	38		4.00	30.0	297	260	900	3.354
R38X5	**R38X5CF**	38		5.00	28.0	371	318	1150	4.069
	R38X6CF	38		6.00	26.0	445	373	1425	4.735
	R38X7CF	38		7.00	24.0	519	427	1700	5.352
R42X2	**R42X2CF**	42	±0.20	2.00	38.0	134	123	375	1.973
R42X3	**R42X3CF**	42		3.00	36.0	201	181	575	2.885
R42X4	**R42X4CF**	42		4.00	34.0	269	237	850	3.749

Other sizes on request!

Seamless EO steel tubes | Material E355+N / St. 52.4 (1.0580)

Acc. to DIN EN 10305-4

1. DIN 2413 I: Tubes with a diameter of OD/ID>2 are calculated for static stress in accordance with DIN 2413 III but with K=yield strength.
2. Burst pressure (B.P.) acc. to Faupel-von-Mises

Material E355+N / St.52.4 (1.0580) Surface: Phosphated and oiled	Material E355+N / St.52.4 (1.0580) Surface: Cr(VI)-free	d_a Outer-Ø (mm)	Outer-Ø Tolerance (mm)	s Wall-thickness (mm)	d_i Inner-Ø (mm)	Design pressure 1 DIN 2413 I static PN bar	Design pressure DIN 2413 III dynamic PN bar	2 Burst pressure bar	Weight kg/m
Order code									
	R10X2ST52CF	10	±0.08	2.00	6.0	852	539	2671	0.395
	R12X1.5ST52CF	12	±0.08	1.50	9.0	533	357	1504	0.388
	R12X2ST52CF	12		2.00	8.0	710	461	2120	0.493
	R15X1.5ST52CF	15	±0.08	1.50	12.0	426	292	1167	0.499
	R15X2ST52CF	15		2.00	11.0	568	379	1622	0.641
	R16X1.5ST52CF	16		1.50	13.0	399	275	1086	0.536
R16X2ST52	**R16X2ST52CF**	16	±0.08	2.00	12.0	533	357	1504	0.691
	R16X2.5ST52CF	16		2.50	11.0	666	436	1959	0.832
	R18X1.5ST52CF	18	±0.08	1.50	15.0	355	247	953	0.610
	R18X2ST52CF	18		2.00	14.0	473	321	1314	0.789
	R20X2ST52CF	20		2.00	16.0	426	292	1167	0.888
	R20X2.5ST52CF	20	±0.08	2.50	15.0	533	357	1504	1.079
	R20X3ST52CF	20		3.00	14.0	639	420	185	1.258
	R22X1.5ST52CF	22	±0.08	1.50	19.0	290	204	767	0.758
	R22X2ST52CF	22		2.00	18.0	387	267	1049	0.986
	R25X2.5ST52CF	25		2.50	20.0	426	292	1167	1.387
R25X3ST52	**R25X3ST52CF**	25	±0.08	3.00	19.0	511	344	1435	1.628
	R25X4ST52CF	25		4.00	17.0	682	445	2016	2.072
	R28X2ST52CF	28	±0.08	2,00	24.0	304	213	806	1.282
R30X3ST52	**R30X3ST52CF**	30		3.00	24.0	426	292	1167	1.998
	R30X4ST52CF	30	±0.08	4.00	22.0	568	379	1622	2.565
	R30X5ST52CF	30		5.00	20.0	710	461	2120	3.083
	R35X3ST52CF	35	±0.15	3.00	29.0	365	253	983	2.367
	R38X3ST52CF	38		3.00	32.0	336	234	899	2.589
R38X4ST52	**R38X4ST52CF**	38	±0.15	4.00	30.0	448	306	1236	3.354
	R38X5ST52CF	38		5.00	28.0	561	374	1597	4.069
	R38X6ST52CF	38		6.00	26.0	673	440	1984	4.735
	R42X3ST52CF	42		3.00	36.0	304	213	806	2.885
	R42X4ST52CF	42	±0.20	4.00	34.0	406	279	1105	3.748
	R42X5ST52CF	42		5.00	32.0	507	342	1422	4.562

Surface finish:
- Tubes with I.D. 1.5-5 mm: outside and inside oiled.
- Tubes from 6 mm I.D.: outside and inside phosphated and oiled.

- Cr(VI)-free:
These dimensions are externally thick coat passivated (thickness of coat 8-12µm), inside oilded.

Other sizes on request!

Seamless EO stainless steel tubes | Material 316Ti (1.4571)

Acc. to DIN EN 10216-5, DIN EN 10305-1

1. DIN 2413 I: Tubes with a diameter of OD/ID>2 are calculated for static stress in accordance with DIN 2413 III but with K=yield strength.
2. Evaluated in Parker Lab and Test Field. ( ) = Burst pressure (B.P.) acc. to Faupel-von-Mises

Material 316Ti (1.4571) Surface bright annealed Order code	d_a Outer-Ø (mm)	Outer-Ø Tolerance (mm)	s Wall-thickness (mm)	d_i Inner-Ø (mm)	Design pressure 1 DIN 2413 I static PN bar	Design pressure DIN 2413 III dynamic PN bar	2 Burst pressure bar	Weight kg/m
R04X171	04	±0.08	1.0	2.0	735	539	(2961)	0.075
R06X171	06	±0.08	1.0	4.0	490	383	1850	0.125
R06X1.571	06		1.5	3.0	735	539	2900	0.169
R08X171	08	±0.08	1.0	6.0	368	297	1300	0.175
R08X1.571	08		1.5	5.0	551	424	2050	0.244
R10X171	10	±0.08	1.0	8.0	294	242	950	0.225
R10X1.571	10		1.5	7.0	441	349	1750	0.319
R10X271	10		2.0	6.0	588	447	2400	0.401
R12X171	12	±0.08	1.0	10.0	245	205	850	0.275
R12X1.571	12		1.5	9.0	368	297	1400	0.394
R12X271	12		2.0	8.0	490	383	1900	0.501
R14X1.571	14	±0.08	1.5	11.0	315	258	1200	0.469
R14X271	14		2.0	10.0	420	334	1550	0.601
R14X2.571	14		2.5	9.0	525	406	2100	0.720
R15X171	15	±0.08	1.0	13.0	196	166	675	0.351
R15X1.571	15		1.5	12.0	294	242	1100	0.507
R15X271	15		2.0	11.0	392	314	1400	0.651
R16X1.571	16	±0.08	1.5	13.0	276	228	950	0.545
R16X271	16		2.0	12.0	368	297	1300	0.701
R16X2.571	16		2.5	11.0	459	362	1850	0.845
R16X371	16		3.0	10.0	551	424	2400	0.977
R18X1.571	18	±0.08	1.5	15.0	245	205	800	0.620
R18X271	18		2.0	14.0	327	267	1150	0.801
R20X271	20	±0.08	2.0	16.0	294	242	1050	0.901
R20X2.571	20		2.5	15.0	368	297	1400	1.095
R20X371	20		3.0	14.0	441	349	1800	1.277
R22X1.571	22	±0.08	1.5	19.0	200	170	650	0.770
R22X271	22		2.0	18.0	267	222	900	1.002
R25X271	25	±0.08	2.0	21.0	235	197	763	1.152
R25X2.571	25		2.5	20.0	294	242	1050	1.408
R25X371	25		3.0	19.0	353	286	1275	1.653
R28X1.571	28	±0.08	1.5	25.0	158	135	550	0.995
R28X271	28		2.0	24.0	210	177	700	1.302
R28X2.571	28		2.5	23.0	263	218	(840)	1.596
R30X2.571	30	±0.08	2.5	25.0	245	205	850	1.722
R30X371	30		3.0	24.0	294	242	1150	2.028
R30X471	30		4.0	22.0	392	314	1500	2.605
R35X271	35	±0.15	2.0	31.0	168	143	550	1.653
R35X2.571	35		2.5	30.0	210	177	(659)	2.035
R35X371	35		3.0	29.0	252	210	(803)	2.404
R38X2.571	38	±0.15	2.5	33.0	193	164	628	2.222
R38X471	38		4.0	30.0	309	254	1150	3.405
R42X271	42	±0.20	2.0	38.0	140	121	475	2.003
R42X371	42		3.0	36.0	210	177	750	2.930

Other sizes on request!

S

Seamless EO stainless steel tubes | Material 316L (1.4404)

Acc. to ASTM A269/A213

1. DIN 2413 I static pressure (W.P.) capability for straight pipe including manufacturing tolerance.
2. Burst pressure (B.P.) acc. to Faupel-von-Mises

Material 316L (1.4404)		d_a Outer-Ø (mm)	Outer-Ø Tolerance (mm)	s Wall-thickness (mm)	d_i Inner-Ø (mm)	1 Design pressure		2 Burst pressure bar	Weight kg/m
Surface						DIN 2413 I static PN bar	DIN 2413 III dynamic PN bar		
pickled	bright annealed								
Order code									
	R04X1-316BA	04	±0.08	1.0	2.0	735	539	2961	0.075
	R06X1-316BA	06	±0.08	1.0	4.0	490	383	1732	0.125
	R06X1.5-316BA	06		1.5	3.0	735	539	2961	0.169
	R08X1-316BA	08	±0.08	1.0	6.0	368	297	1229	0.175
	R10X1-316BA	10	±0.08	1.0	8.0	294	242	953	0.225
	R10X1.5-316BA	10		1.5	7.0	441	349	1524	0.319
	R10X2-316BA	10		2.0	6.0	588	447	2182	0.401
	R12X1-316BA	12	±0.08	1.0	10.0	245	205	779	0.275
	R12X1.5-316BA	12		1.5	9.0	368	297	1229	0.394
	R12X2-316BA	12		2.0	8.0	490	383	1732	0.501
	R15X1.5-316BA	15	±0.08	1.5	12.0	294	242	953	0.507
R16X2-316		16	±0.08	2.0	12.0	368	297	1229	0.701
R16X2.5-316		16		2.5	11.0	459	362	1601	0.845
R18X1.5-316		18	±0.08	1.5	15.0	245	205	779	0.620
R18X2-316		18		2.0	14.0	327	267	1074	0.801
R20X2-316		20	±0.08	2.0	16.0	294	242	953	0.901
R20X2.5-316		20		2.5	15.0	368	297	1229	1.096
R22X2-316		22	±0.08	2.0	18.0	267	222	857	1.002
R25X2-316		25	±0.08	2.0	21.0	235	197	745	1.152
R25X2.5-316		25		2.5	20.0	294	242	953	1.409
R25X3-316		25		3.0	19.0	353	286	1172	1.653
R28X2-316		28	±0.08	2.0	24.0	210	177	659	1.302
R30X2.5-316		30	±0.08	2.5	25.0	245	205	779	1.722
R30X3-316		30		3.0	24.0	294	242	953	2.028
R35X3-316		35	±0.15	3.0	29.0	252	210	803	2.404
R38X3-316		38	±0.15	3.0	32.0	232	195	734	2.629
R38X4-316		38		4.0	30.0	309	254	1010	3.405
R38X5-316		38		5.0	28.0	387	311	1305	4.132
R38X6-316		38		6.0	26.0	464	365	1621	4.808
R42X3-316		42	±0.20	3.0	36.0	210	177	659	2.930

Other sizes on request!

Seamless EO stainless steel tubes | Material 316L (1.4404)

Acc. to DIN EN 10216-5, DIN EN 10305-1

1. DIN 2413 I: Tubes with a diameter of OD/ID>2 are calculated for static stress in accordance with DIN 2413 III but with K=yield strength.
2. Burst pressure (B.P.) calculation acc. to Faupel-von-Mises

Material 316 L (1.4404) Surface bright annealed Order code	d_a Outer-Ø (mm)		s Wallthickness		d Inner-Ø (mm)	1 Design pressure		2 Burst pressure bar	Weight kg/m
	Inch	mm	Inch	mm		DIN 2413 I static PN bar	DIN 2413 III dynamic PN bar		
R1/8X0.028TP316/L	1/8	3.18	0.028	0.71	1.76	659	492	2538	0.044
R3/16X0.035TP316/L	3/16	4.76	0.035	0.89	2.98	549	422	1996	0.086
R1/4X0.035TP316/L	1/4	6.35	0.035	0.89	4.57	412	328	1403	0.122
R1/4X0.049TP316/L			0.049	1.24	3.87	576	440	2126	0.159
R1/4X0.065TP316/L			0.065	1.65	3.05	619	556	3135	0.194
R3/8X0.035TP316/L	3/8	9.53	0.035	0.89	7.75	274	227	883	0.193
R3/8X0.049TP316/L			0.049	1.24	7.05	384	309	1294	0.257
R3/8X0.065TP316/L			0.065	1.65	6.23	510	396	1818	0.326
R1/2X0.035TP316/L	1/2	12.70	0.035	0.89	10.92	206	174	644	0.263
R1/2X0.049TP316/L			0.049	1.24	10.22	288	238	932	0.356
R1/2X0.065TP316/L			0.065	1.65	9.40	382	307	1286	0.457
R1/2X0.083TP316/L			0.083	2.11	8.48	488	381	1724	0.560
R5/8X0.049TP316/L	5/8	15.88	0.049	1.24	13.40	230	193	729	0.455
R5/8X0.065TP316/L			0.065	1.65	12.58	306	251	996	0.588
R3/4X0.049TP316/L	3/4	19.05	0.049	1.24	16.57	192	163	598	0.553
R3/4X0.065TP316/L			0.065	1.65	15.75	255	212	813	0.719
R3/4X0.083TP316/L			0.083	2.11	14.83	325	266	1069	0.895
R3/4X0.095TP316/L			0.095	2.41	14.23	372	300	1248	1.004
R3/4X0.109TP316/L			0.109	2.77	13.51	427	339	1467	1.129
R1X0.065TP316/L	1	25.40	0.065	1.65	22.10	191	162	595	0.981
R1X0.083TP316/L			0.083	2.11	21.18	244	204	775	1.231
R1X0.095TP316/L			0.095	2.41	20.58	279	231	900	1.387
R1X0.126TP316/L			0.126	3.20	19.00	370	299	1240	1.779

Other sizes on request!

KOVAL

Seamless EO tube bends 90° Material E235N (St. 37.4) and 1.4571

For minimum pressure loss

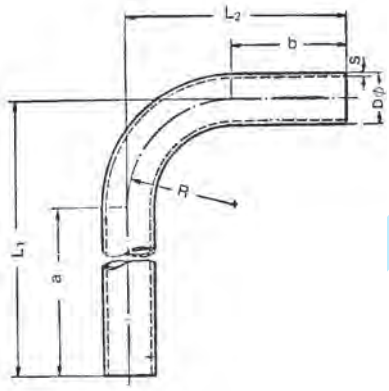

Order code		Tube		Wall-	Tube	Bending	Leg length		Length		Weight
Cr(VI)-free	1.4571	O.D. D	Tolerance ±	thickness S	I.D. mm	radius R	a	b	L1	L2	kg/piece
RB16X2CF	**RB16X271**	16	0.08	2.0	12	30	200	40	230	70	0.198
RB18X1.5CF	**RB18X1.571**	18	0.08	1.5	15	36	200	35	236	71	0.178
RB20X2CF		20	0.08	2.0	16	36	200	45	236	81	0.268
RB20X2.5CF	**RB20X2.571**	20	0.08	2.5	15	36	200	45	236	81	0.326
RB22X1.5CF		22	0.08	1.5	19	38	200	40	238	78	0.227
RB22X2CF	**RB22X271**	22	0.08	2.0	18	38	200	40	238	78	0.296
RB25X2CF		25	0.08	2.0	21	44	200	50	244	94	0.362
RB25X2.5CF	**RB25X2.571**	25	0.08	2.5	20	44	200	50	244	94	0.442
RB25X3CF		25	0.08	3.0	19	44	200	50	244	94	0.519
RB28X1.5CF		28	0.08	1.5	25	48	200	50	248	98	0.319
RB28X2CF	**RB28X271**	28	0.08	2.0	24	48	200	50	248	98	0.417
RB28X3CF		28	0.08	3.0	22	48	200	50	248	98	0.601
RB30X2.5CF		30	0.08	2.5	25	50	200	60	250	110	0.575
RB30X3CF	**RB30X371**	30	0.08	3.0	24	50	200	60	250	110	0.677
RB30X4CF		30	0.08	4.0	22	50	200	60	250	110	0.869
RB35X2CF	**RB35X271**	35	0.15	2.0	31	60	200	65	260	125	0.586
RB35X3CF		35	0.15	3.0	29	60	200	65	260	125	0.852
RB38X2.5CF		38	0.15	2.5	33	65	200	75	265	140	0.827
RB38X3CF		38	0.15	3.0	32	65	200	75	265	140	0.979
RB38X4CF	**RB38X471**	38	0.15	4.0	30	65	200	75	265	140	1.268
RB38X5CF		38	0.15	5.0	28	65	200	75	265	140	1.538
RB42X2CF	**RB42X271**	42	0.20	2.0	38	80	200	85	280	165	0.809
RB42X3CF		42	0.20	3.0	36	80	200	85	280	165	1.183
RB50X6*		50	0.20	6.0	38	180	150	150	330	330	3.496
RB65X8*		65	0.30	8.0	49	180	160	160	330	330	6.294

Tolerances for leg length a, b = ±2.5 mm

For tube bends, contrary to straight tubes of the same wall thickness there is a higher stress at the inside of the bend and a reduction of the fatigue strength, because of the out-of-round of tube. Details see DIN 2413 III section 4.7.

If the elbow end is cut off to a different length, a recalibration of the tube end may be necessary.

Tube bends material E235N (St. 37.4) are phosphated and oiled. (Yellow chromated on request.)

*phosphated and oiled

Ermeto Original
Tube clamps

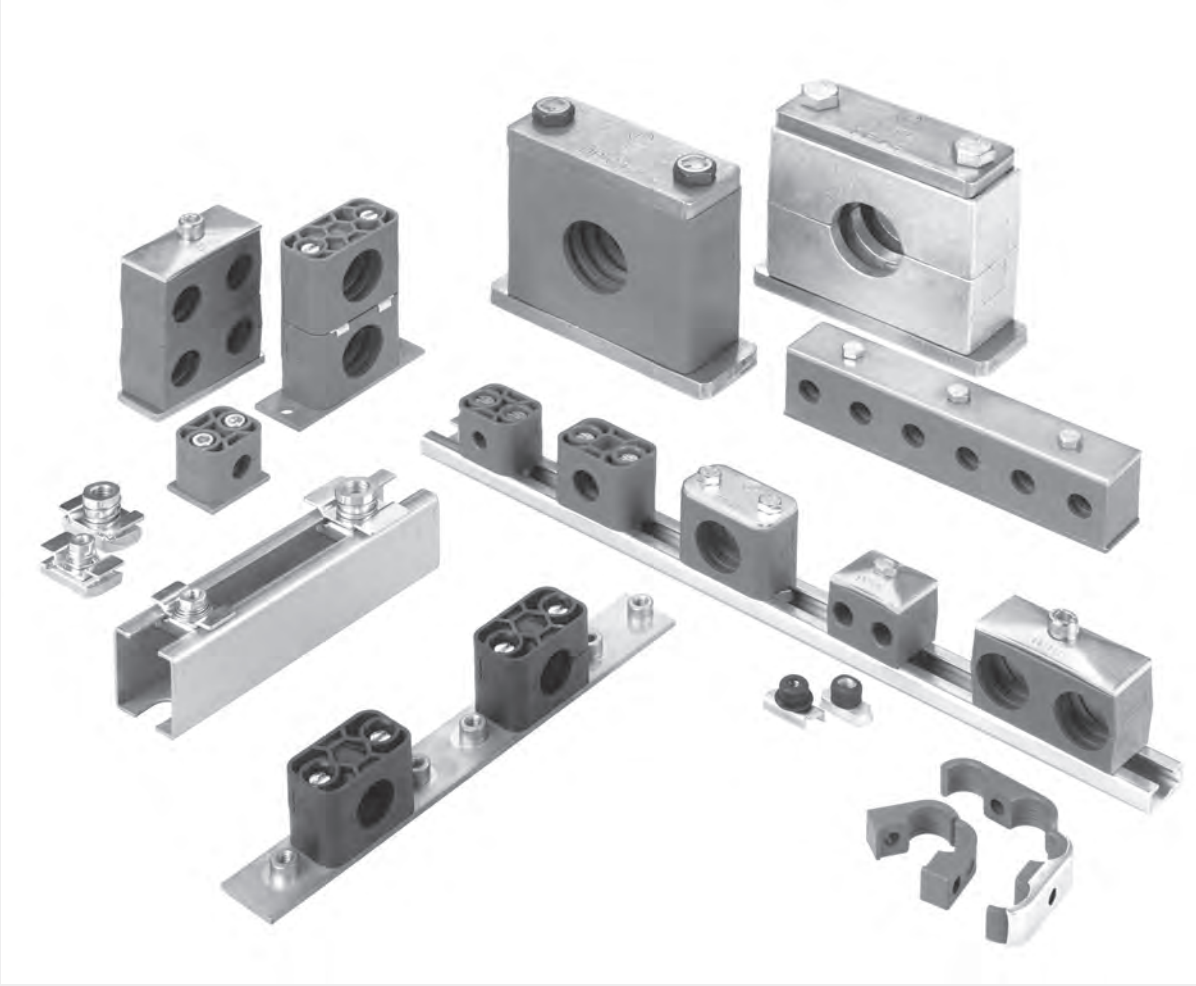

Content

Technical data T3
Material properties T4
Special materials T5
Assembly instruction T6

Series A Light series (DIN 3015-1)	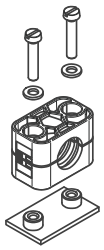 T8-T23	Multiclamps	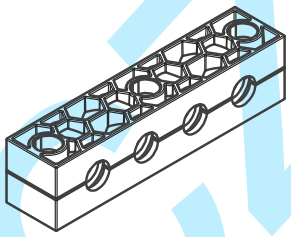 T38-T43
Series B Double series (DIN 3015-3)	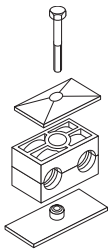 T24-T28	Series O	single double 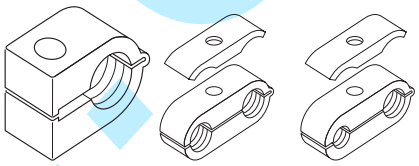 T44-T45
Series C Heavy series (DIN 3015-2)	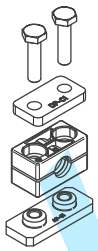 T29-T37	Hydraulic steel clamps	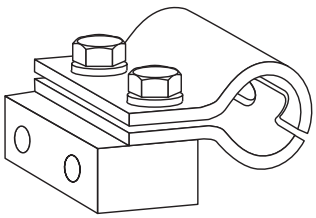 T46-T47
		Tube clamps with Elastomer inlay	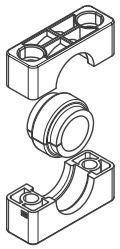 T48-T50
		Fixed adaptor	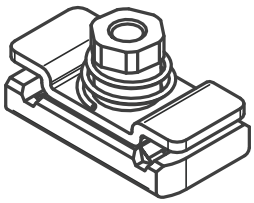 T51-T54

kovaz.cz

Tube clamps

DIN 3015

Programme:

Tube clamps series A (according to DIN 3015 Part 1)
Available in nine standard sizes for normal mechanical requirements.
– Outer tube diameter for the metric series 4 to 101.8 mm
– Outer tube diameter for the inch-size series R 1/8″ to R 3½″
– Outer tube diameter for the imperial size series ¼″ to 4″
Accessories and construction types

Tube clamps series B (according to DIN 3015 Part 3)
Available as a twin tube clamp in five standard sizes for normal mechanical requirements.
– Outer tube diameter for the metric series 6 to 42 mm
– Outer tube diameter for the inch-size series R 1/8″ to R1 1/4″
– Outer tube diameter for the imperial size series 1/4″ to 1 1/2″
Double tube clamps with different tube o.d. are available on request.
Accessories and construction types

Tube clamps series C (according to DIN 3015 Part 2)
Specially designed for high mechanical requirements, and available in ten standard sizes.
– Outer tube diameter for the metric series 6 to 406.4 mm
– Outer tube diameter for the inch-size series R 1/8″ to R 16″
– Outer tube diameter for the imperial size series 5/16″ to 12 3/4″
Accessories and construction types

Design:
According to DIN 3015:
Both upper and lower clamp-halves are identical.
Webs inside the bore of the clamps provide an impact and vibration deadening effect, and absorb the forces towards the direction of the tube axis.
For mounting hoses and cables it is recommended that clamps with a smooth interior surface and without prestress (block height C is reduced by gap height S) are used.

Clamp material:

Polypropylene	–30°C up to + 90° C	colour dark green
Polyamide	–40°C up to + 120° C	colour black
Rubber	–50°C up to + 120° C	colour black
Aluminium	–40°C up to + 300° C	

Stainless steel upon request.

Non standard colours upon request.

Special materials
Flame retardant.....p. T5
Corrosion retardant..... p. T5

Resistance to stress:
The remarkable features of **Tube Clamps** are their considerable re-set capability, high tensile strength, as well as their very high output strength and excellent resistance to cold. The choice of design and clamp material depends on the specific demands of the mechanical and thermal requirements.

Order code:
The order code for clamp halves as well as the reference No. for complete tube clamps incorporates the serial indication, material description and interior surface.

In accordance with DIN 3015, clamps always consist of two clamp halves. (1 clamp = 2 clamp halves)

Example of description:

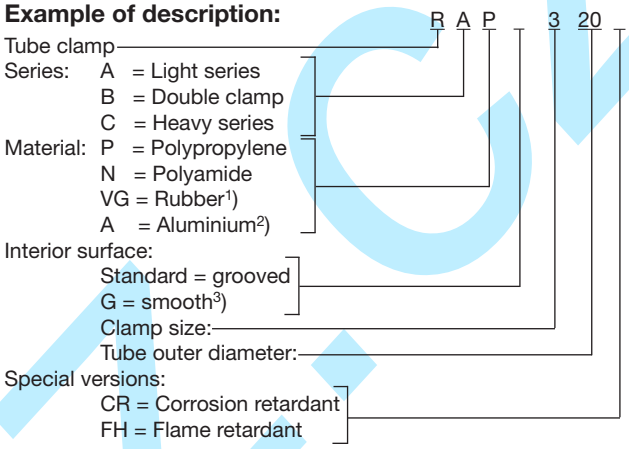

1) Rubber only available for series A and B, inside smooth and series C grooved design (G).
2) Aluminium only available for series A size 0 to 6 and series C size 1 to 8. Aluminium clamps only available in a grooved design.
3) Inside smooth series A not for size 0.
Inside smooth series C only up to size 8.
Clamps with smooth interior surface and without prestress

Finish of the metal components:
All metal components are available in steel and stainless steel.

Stainless steel quality:
Stainless steel W5 (1.4401 or 1.4571) from stock, W4 (1.4301 or 1.4305) available on request.

Surfaces steel:
As is standard, the steel components have the following surfaces:

Metal part	Series A+B		Series C	
Bolt	Cr(VI)-free zinc plated		phosphated	Cr(VI)-free zinc plated
Cover plate	Cr(VI)-free zinc plated		phosphated	Cr(VI)-free zinc plated
Welding plate	phosphated		phosphated	
Mounting rail nut	Cr(VI)-free zinc plated		Cr(VI)-free zinc plated	
Mounting rail	plain & oiled	Cr(VI)-free zinc plated	plain & oiled	Cr(VI)-free zinc plated

Surfaces differing from this are available on request.

Registration:
On request.

T

Tube clamps material properties

DIN 3015

Mechanical properties	Polypropylene (PP)	Polyamide (PA)	Aluminium (Al)	Rubber (TPE)
Density	0.90 g/cm³	1.10 g/cm³	2.65 g/cm³	0.97 g/cm³
Impact value at 23 °C	7 kJ/m² (ISO 179/1eA)	8 kJ/mm² (ISO 179/1eA)	–	–
Impact value at -20 °C	3 kJ/m² (ISO 179/1eA)	–	–	–
Modulus of elasticity	1.400 N/mm² (ISO 527)	2.000 N/mm² (ISO 527)	72.000 N/mm²	–
Yield stress. resp. tensile strength (Rm)	28 N/mm² (ISO 527)	50 N/mm² (ISO 527)	>240 N/mm²	5.2 ... 8.8 N/mm² (ASTM D412)
Thermal properties				
Temp. resistance	–30 … +90°C	–40 … +120°C	-40 ... +300°C	–50 … +120°C
Chemical properties				
Weak acids	limited resistant	limited resistant	limited resistant	resistant
Weak alkalis	limited resistant	limited resistant	limited resistant	resistant
Alcohol	resistant	resistant	resistant	resistant
Petrol	limited resistant	resistant	resistant	limited resistant
Mineral oils	limited resistant	resistant	resistant	resistant
Other oils	resistant	resistant	resistant	resistant
Sea Water	resistant	resistant	limited resistant	resistant

The outlined particulars are approximate values and are only shown for reference, which are not binding, and with regard to possible protection of third parties. They do not exempt you from your own examination of suitability of the products delivered by us. Therefore, these values can only be used in a limited way for guidance only.

The application of the products is carried out outside of our control and, therefore, is exclusively subject to your own area of responsibility. Any claim however would be limited for all damages to the value of the goods supplied by us and in use by you.

It goes without saying, that we guarantee the perfect quality of our products according to our general sales and delivery conditions.

kovaz.cz

Special materials

Flame retardant clamps for railway vehicles EN 45545-2

Our flame retardant finish is the ideal solution for the transport and railway market.
This provides increased safety and efficiency for railway vehicles.

Material:	Polypropylene (PP-F)	Polyamide (PA-F)	Rubber (TPE-F)
T01 EN ISO 4589-2: Oxygen Index	OI = 38.7 %	OI = 35.5 %	OI = 33.4 %
T10.03 EN ISO 5659-2: 25 kW/m²	D_S max. = 48	D_S max. = 124	D_S max. = 79
T12 NF X 70 100-1 & -2: 600°C	CIT_{NLP} = 0.15	CIT_{NLP} = 0.51	CIT_{NLP} = 0.15
Compliance of the requirement set R22, 23, 24, 26 for the hazard level:	HL1 - HL2 - HL3	HL1 - HL2 - HL3	HL1 - HL2 - HL3

The advantages:
- Improved railway vehicle safety
- Flame retardant in accordance with DIN 45545-2, UL 94, DIN 3015, BS 6853, DIN 5510-2, NF F 16-101 NF F 16-101, BS 6853, UL 94
- 2+5 system. Only 2 sizes for tube diameters 6-42 mm
- Plates and rails in steel and stainless steel

Standard compliance:
Flame protected tube clamps DIN 3015 certification in line with:
- BS 6853
- DIN 5510-2
- DIN EN 45545
- UL 94
- NF F 16-101

For the original material polypropylene, the color of the clamp is white, black for polymid and solid rubber.

Example of description:

R A P _ 3 20 FH X

- Tube clamp:
- Series: A = Light series; B = Twin tube clamp; C = Heavy series
- Material: P = Polypropylene; N = Polyamide; VG = Rubber[1])
- Interiour surface: Standard = grooved; G = smooth[2])
- Clamp size:
- Tube outer diameter:
- Special versions: FH = Flame retardant
- Clamp body only

Corrosion retardant clamps

Our anti-corrosion finish is the ideal solution for areas at risk of corrosion.

Anticorrosion was developed on the basis of the approved polypropylene.

A specialised corrosion inhibitor effectively slows down the development of crevice corrosion between the clamp bodies and the tubework.

These corrosion-preventing properties were tested and recorded by salt spray tests in accordance with DIN EN ISO 9227.

Tube clamps made of PP-CR are available in the A+C series of our approved tube clamp range.

The source material is polypropylene, and the colour of the clamps is always slate grey.

Advantages:
- Enormous reduction of crevice corrosion
- Extension of maintenance intervals
- Cost reduction due to extended durability of the tubing

Example of description:

R A P G 3 20 CR X

- Tube clamp:
- Series: A = Light series; C = Heavy series
- Material: P = Polypropylene
- Interiour surface: G = smooth[2])
- Clamp size:
- Tube outer diameter:
- Special versions: CR = Corrosion retardant
- Clamp body only

[1]) Rubber for series A and B only with smooth interiour surface (G).
[2]) Inside smooth series A not for size 0.
Inside smooth series C only up to size 8.
Clamps with smooth interior surface and without prestress.

T

Tube clamps assembly instruction

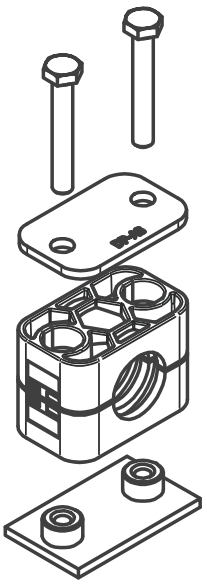

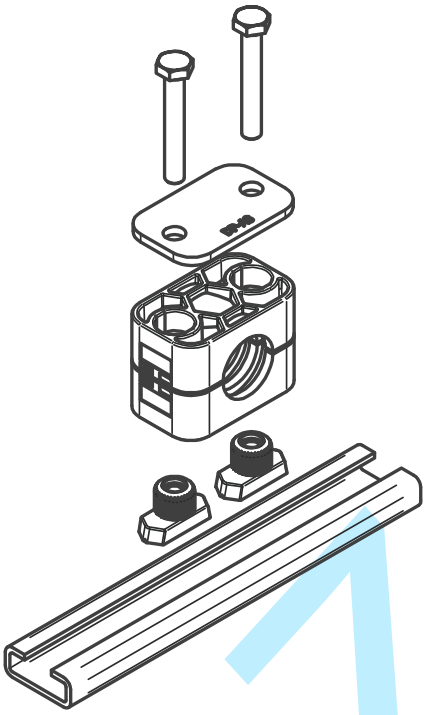

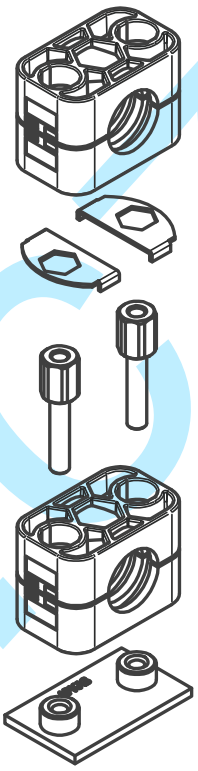

Assembly:

Assembly on to metal welding plates

Place welding plates on a base appropriate for the load. Make sure that the clamps are properly aligned. Clamp lower clamp halve onto welding plate, insert tube, place upper clamp halve onto lower halve and fasten with the screws. Attention must be paid to the bias (after completed assembly, clamp halves may not be in contact)! Do not weld with fitted plastic clamp! Extended welding plates may be screw-fastened to the base.

Assembly on support rails

Support rails are available in four different heights and come in pieces of 1 m or 2 m length, as required.
Weld on support rail or screw-fasten with fastening angle bracket. Insert support rail nuts in rail and turn until stoppage. For heavy duty construction series, nuts are simply pushed in. Clamp lower clamp half on support rail nuts, insert tube, place upper clamp halve onto lower halve and fasten with the screws. Before fastening the screws the clamp may still be positioned. Attention must be paid to the bias (after completed assembly, the clamp halves may not be in contact)!

Construction assembly

Clamps allow the assembly of multiple clamps of the same construction size and of different tube diameters one above the other. The construction assembly is carried out with special fixing screws that are secured against twisting by applying a locking plate. Clamp lower clamp halve on welding plate or support rail respectively, insert tube, place upper clamp halve on lower halve and fasten with fixing screws. The fixing screw juts out from the upper clamp halve. The application of a locking late scurely fastens the fixing screw and prevents twisting. Clamp on second clamp halve on to the fixing screws etc.

konaz.cz

Tube clamps

DIN 3015

Screw tightening torque and axial pipe shearing forces

The indicated screw tightening torque and axial pipe shearing forces refer to the assembly with cover plates and outside hexagon bolts according to DIN 931/933.
The axial pipe shearing force (according to DIN 3015, part 10) is an average value, determined by three tests made with a steel pipe according to DIN 2448 of St. 37, for which static friction is assumed (temperature during tests: 23°C). When loading the clamp with the indicated test force (F) in axial pipe direction, the pipe must not slide in the clamp.

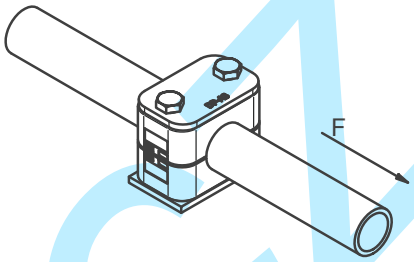

Series A - Light series (DIN 3015, part 1)

Size	Fixing screw DIN 931/933	Polypropylene		Polyamide		Aluminium	
		Screw tightening torque (Nm)	Pipe shearing force F (kN)	Screw tightening torque (Nm)	Pipe shearing force F (kN)	Screw tightening torque (Nm)	Pipe shearing force F (kN)
0	M6	8	0.6	10	0.6	–	–
1	M6	8	1.1	10	0.7	12	4.2
2	M6	8	1.2	10	0.8	12	4.3
3	M6	8	1.4	10	1.6	12	4.8
4	M6	8	1.5	10	1.7	12	5.0
5	M6	8	1.9	10	2.0	12	7.3
6	M6	8	2.0	10	2.5	12	8.9
7	M6	8	2.3	10	3.2	–	–
8	M6	8	2.6	10	3.5	–	–

Series B - Double series (DIN 3015, part 3)

Size	Fixing screw DIN 931/933	Polypropylene		Polyamide	
		Screw tightening torque (Nm,)	Pipe shearing force F (kN)	Screw tightening torque (Nm)	Pipe shearing force F (kN)
1	M6	5	0.9	6	0.9
2	M8	12	2.1	12	2.2
3	M8	12	1.9	12	2.0
4	M8	12	2.7	12	2.9
5	M8	8	1.7	8	2.5

Series C - Heavy series (DIN 3015, part 2)

Size	Fixing screw DIN 931/933	Polypropylene		Polyamide		Aluminium	
		Screw tightening torque (Nm)	Pipe shearing force F (kN)	Screw tightening torque (Nm)	Pipe shearing force F (kN)	Screw tightening torque (Nm)	Pipe shearing force F (kN)
1	M10	12	1.6	20	4.2	30	12.1
2	M10	12	2.9	20	4.5	30	15.1
3	M10	15	3.3	25	5.1	35	15.5
4	M12	30	8.2	40	9.3	55	29.4
5	M16	45	11.0	55	15.8	120	34.8
6	M20	80	14.0	150	21.0	220	50.0
7	M24	110	28.0	200	32.0	250	70.6
8	M30	180	40.0	350	48.0	500	84.5
9	M30	200	119.0	370	125.0	500	181.5
10	M30	270	168.0	450	180.0	600	244.5

For further information on clamp mouting, see page F14 following.

Tube clamps series A (Light construction series) – Components

DIN 3015, part 1

Order codes for clamp halves:

Material	Interior surface	Order code
Polypropylene	grooved	**RAP**
	smooth	**RAPG**
Polyamide	grooved	**RAN**
	smooth	**RANG**
Rubber	smooth	**RAVG**[1)]
Aluminium	grooved	**RAA**[2)]

(Please exchange as required standard abbreviation RAP in column for "clamp halves")
For flame- or corrosion retardant materials, please refer to page T5.

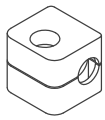
size 0

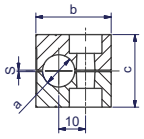

size 0

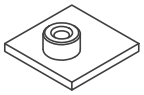
size 0

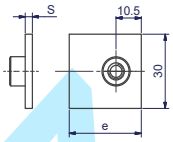

size 0

size 1–8

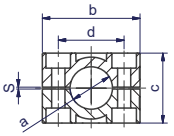

size 1–8
Width: 30 mm

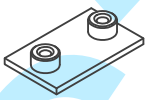
size 1–8

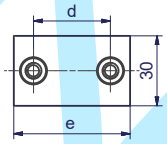

size 1–8

clamp size	Tube O.D. mm a	Tube NB	Tube O.D.	1 part 2 clamp halves **RAP...** Order code	dimensions: b	c	d	s	welding plate, short **APK A...** Order code	dimensions: d	e	s
0	4.0 6.0 6.4 8.0 9.5 10.0 12.0	G 1/8	1/4 5/16 3/8	**RAP004X** **RAP006X** **RAP006.4X** **RAP008X** **RAP009.5X** **RAP010X** **RAP012X**	28	27	-	0.6	**APKA0...***	-	30	3
1	4.0 6.0 6.4 8.0 9.5 10.0 12.0	G 1/8	1/4 5/16 3/8	**RAP104X** **RAP106X** **RAP106.4X** **RAP108X** **RAP109.5X** **RAP110X** **RAP112X**	34	27	20	0.6	**APKA1...***	20	36	3
2	12.7 13.5 14.0 15.0 16.0 17.2 18.0	G 1/4 G 3/8	1/2 5/8	**RAP212.7X** **RAP213.5X** **RAP214X** **RAP215X** **RAP216X** **RAP217.2X** **RAP218X**	42	33	26	0.8	**APKA2...***	26	42	3
3	19.0 20.0 21.3 22.0 23.0 25.0 25.4	G 1/2	3/4 1	**RAP319X** **RAP320X** **RAP321.3X** **RAP322X** **RAP323X** **RAP325X** **RAP325.4X**	49	35	33	1.0	**APKA3...***	33	50	3
4	26.9 28.0 30.0	G 3/4		**RAP426.9X** **RAP428X** **RAP430X**	59	42	40	1.2	**APKA4...***	40	59	3
5	32.0 33.7 35.0 38.0 40.0 42.0	G 1 G 1 1/4	1 1/4 1 1/2	**RAP532X** **RAP533.7X** **RAP535X** **RAP538X** **RAP540X** **RAP542X**	71	58	52	1.2	**APKA5...***	52	72	3

Continuation see next page …

Tube clamps series A (Light construction series) – Components (Continued)

DIN 3015, part 1

Order codes for clamp halves:

Material	Interior surface	Order code
Polypropylene	grooved	**RAP**
	smooth	**RAPG**
Polyamide	grooved	**RAN**
	smooth	**RANG**
Rubber	smooth	**RAVG**[1]
Aluminium	grooved	**RAA**[2]

(Please exchange as required standard abbreviation RAP in column for "clamp halves")
For flame- or corrosion retardant materials, please refer to page T5.

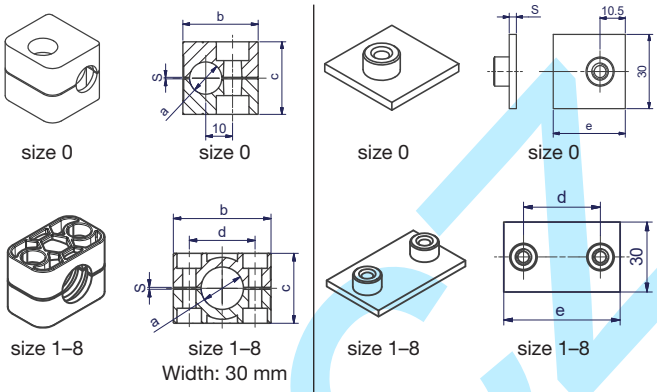

clamp size	Tube O.D. mm a	Tube NB	Tube O.D.	1 part 2 clamp halves RAP… Order code	dimensions: b	c	d	s	welding plate, short APK A… Order code	dimensions: d	e	s
6	44.5		1 3/4	**RAP644.5X**	86	66	66	1.2	**APKA6...***	66	88	3
	45.0			**RAP645X**								
	48.0	G 1 1/2		**RAP648X**								
	50.0			**RAP650X**								
	50.8		2	**RAP650.8X**								
	52.0			**RAP652X**								
	54.0			**RAP654X**								
	55.0			**RAP655X**								
	57.0		2 1/4	**RAP657X**								
7	57.2		2 1/4	**RAP757.2X**	121	93.6	94	1.6	**APKA7...***	94	122	5
	60.3	G 2		**RAP760.3X**								
	63.5		2 1/2	**RAP763.5X**								
	70.0		2 3/4	**RAP770X**								
	73.0			**RAP773X**								
	76.1	G 2 1/2	3	**RAP776.1X**								
8	88.9	G 3		**RAP888.9X**	147	117.6	120	1.6	**APKA8...***	120	148	5
	101.8	G 3 1/2	4	**RAP8101.8X**								

[1] When assemblying solid rubber clamps, covering plates, hexagon screws and locking washers must be used.
[2] Aluminium sizes 0-6

*Please add the suffix below according to the surface/material required.

Order code suffixes		
Surface/material	**Suffix**	Example
Steel, phosphated	**X**	APKA0X
Steel, zinc plated, Cr(VI)-free	**VZX**	APKA0VZX
Stainless Steel 1.4571	**4571X**	APKA04571X

Tube clamps series A (Light construction series) – Components

DIN 3015, part 1

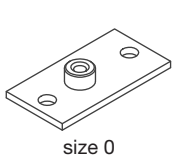

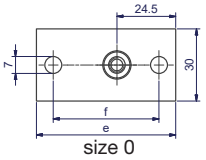

size 0

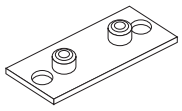

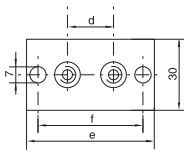

size 1–8
Thickness: 3 mm

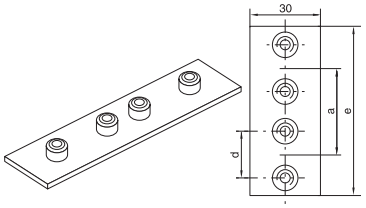

Thickness: 3 mm

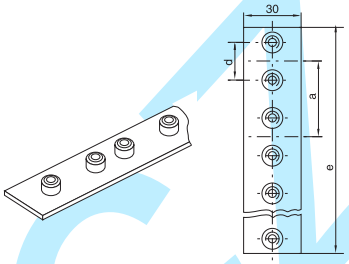

Thickness: 3 mm

clamp size	weld/screw plate, long				twin welding plate				multiple weld plate			
	APL A... Order code	dimensions: d	e	f	**APD A...** Order code	dimensions: d	a	e	**APR A...** Order code	dimensions: d	a	e
0	**APLA0...***	–	58	44	**APDA0...***	–	30	61	**APRA0...*** **(10 clamps)**	–	30	298
1	**APLA1...***	20	64	50	**APDA1...***	20	35	69	**APRA1...*** **(10 clamps)**	20	35	349
2	**APLA2...***	26	70	56	**APDA2...***	26	43	86	**APRA2...*** **(10 clamps)**	26	43	427
3	**APLA3...***	33	78	64	**APDA3...***	33	52	104	**APRA3...*** **(10 clamps)**	33	52	516
4	**APLA4...***	40	87	73	**APDA4...***	40	60	117	**APRA4...*** **(5 clamps)**	40	60	297
5	**APLA5...***	52	100	86	**APDA5...***	52	75	145	**APRA5...*** **(5 clamps)**	52	75	370
6	**APLA6...***	66	116	100	**APDA6...***	66	90	176	**APRA6...*** **(5 clamps)**	66	90	446
7	**APLA7...***	94	150	136								
8	**APLA8...***	120	178	162								

*Please add the suffix below according to the surface/material required.

Order code suffixes		
Surface/material	**Suffix**	Example
Steel, phosphated	**X**	APLA0X
Steel, zinc plated, Cr(VI)-free	**VZX**	APLA0VZX
Stainless Steel 1.4571	**4571X**	APLA04571X

kovaci

Tube clamps series A (Light construction series) – Components

DIN 3015, part 1

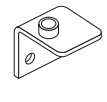

size 0

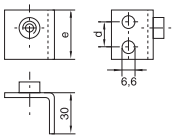

size 0

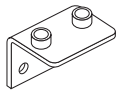

size 1–6

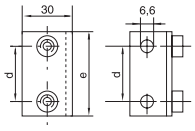

size 1–6
Thickness: 3 mm

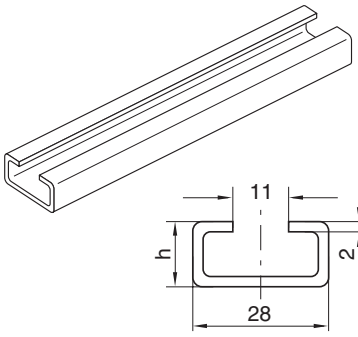

1 or 2 mtr

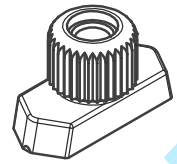

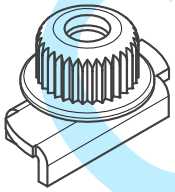

With loss protection
(See page T54).

clamp size	weld plate, angled			mounting rail		rail nut					
	APW A... Order code	dimensions: d	e	**TS...A/B** Order code	dimensions: h	**TM...A/B1** Order code	dimensions: a	b	c	m	h
0	**APWA0X APWA04571X**	14	30	**TS11A/B1...* TS11A/B2...* TS14A/B1...* TS14A/B2...* TS30A/B1...* TS30A/B2...***	TS11: 11 TS14: 14 TS30: 30	**TMA/TMB1VERZX TMA/TMB1/4571X**	25.4	10.4	12	M6	14.5
1	**APWA1X APWA14571X**	20	36								
2	**APWA2X APWA24571X**	26	42								
3	**APWA3X APWA34571X**	33	50								
4	**APWA4X APWA44571X**	40	59			**TMA/TMB1WLPVZX TMA/TMB1WLP71X**	24.9	10.5	12	M6	14.5
5	**APWA5X APWA54571X**	52	72								
6	**APWA6X APWA64571X**	66	88								

*Please add the suffix below according to the surface/material required.

Order code suffixes		
Surface/material	**Suffix**	Example
Steel, phosphated	**X**	TS11A/B1X
Steel, zinc plated, Cr(VI)-free	**VZX**	TS11A/B1VZX
Stainless Steel 1.4571	**71X**	TS11A/B171X

Kovaci

T

Tube clamps series A (Light construction series) – Components

DIN 3015, part 1

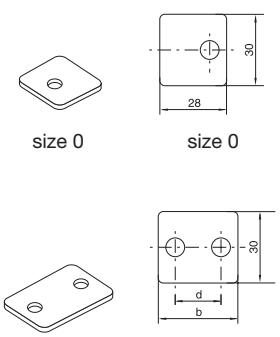

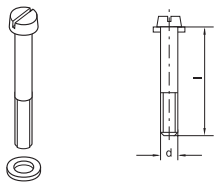

ISO 1207

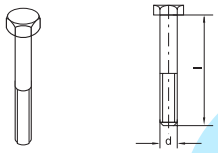

DIN 931/933

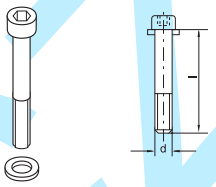

ISO 4762

clamp size	cover plate			slot head		hexagon head		socket head	
	DP A... Order code	dimensions: b	d	**SL A...** Order code	dimensions: d × L	**SSL A...** Order code	dimensions: d × L	**IS A...** Order code	dimensions: d × L
0	**DPA0...***	–	–	**SLA0...***	M 06×20	**SSLA0...***	M 06×30	**ISA0...***	M 06×20
1	**DPA1...***	34	20	**SLA0...***	M 06×20	**SSLA0...***	M 06×30	**ISA0...***	M 06×20
2	**DPA2...***	40	26	**SLA2...***	M 06×25	**SSLA2/SSB1...***	M 06×35	**ISA2...***	M 06×25
3	**DPA3...***	48	33	**SLA3...***	M 06×30	**SSLA3...***	M 06×40	**ISA3...***	M 06×30
4	**DPA4...***	57	40	**SLA4...***	M 06×35	**SSLA4...***	M 06×45	**ISA4...***	M 06×35
5	**DPA5...***	70	52	**SLA5...***	M 06×50	**SSLA5...***	M 06×60	**ISA5...***	M 06×50
6	**DPA6...***	86	66	**SLA6...***	M 06×60	**SSLA6...***	M 06×70	**ISA6...***	M 06×60
7	**DPA7...***	120	94	**SLA7...***	M 06×90	**SSLA7...***	M 06×100	**ISA7...***	M 06×90
8	**DPA8...***	146	120	**SLA8...***	M 06×110	**SSLA8...***	M 06×125	**ISA8...***	M 06×110

*Please add the suffix below according to the surface/material required.

Order code suffixes		
Surface/material	**Suffix**	Example
Steel, zinc plated, Cr(VI)-free	**X**	DPA0X
Stainless Steel 1.4571	**4571X**	DPA04571X

Tube clamps series A (Light construction series) – Components

DIN 3015, part 1

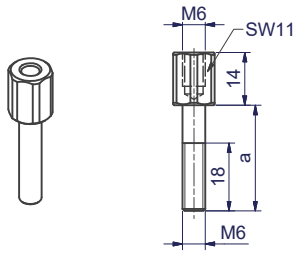

DIN 938

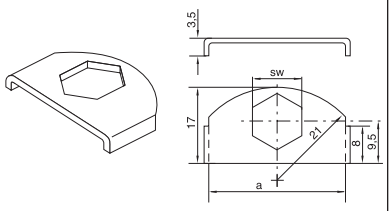

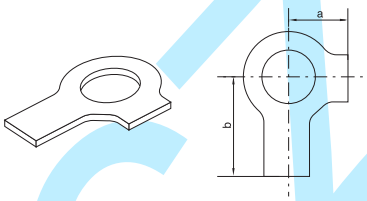

clamp size	stacking[1]) AS A… Order code	stacking[1]) dimensions: a	locking plate[1]) SB A Order code	locking plate[1]) dimensions: a	locking plate[1]) dimensions: SW	locking washer[2]) US A Order code	locking washer[2]) dimensions: a	locking washer[2]) dimensions: b
0	**ASA0...* (ASB1...*)**	20						
1	**ASA0...* (ASB1...*)**	20						
2	**ASA2...***	25						
3	**ASA3...***	28						
4	**ASA4...***	34	**SBA...***	30	11	**USA/USB1X[3])**	9	18
5	**ASA5...***	50						
6	**ASA6...***	60						
7	**ASA7...***	85						
8	**ASA8...***	110						

[1]) The use of stacking bolts necessitates the use of locking plates in the construction assembly.
[2]) When assembling solid rubber clamps, cover plates, hexagon screws and locking washers must be used.
[3]) Material = stainless steel 1.4571

*Please add the suffix below according to the surface/material required.

Order code suffixes		
Surface/material	**Suffix**	Example
Steel, zinc plated, Cr(VI)-free	**X**	DPA0X
Stainless Steel 1.4571	**4571X**	DPA04571X

kovaz.cz

Tube clamps series A (Light construction series) – Complete range

Order codes for clamp halves:

Material	Interior surface	Order code
Polypropylene	grooved	**RAP**
	smooth	**RAPG**
Polyamide	grooved	**RAN**
	smooth	**RANG**
Rubber	smooth	**RAVG**[1)]
Aluminium	grooved	**RAA**[2)]

(Please exchange as required standard abbreviation RAP in column for "Order code")

For flame- or corrosion retardant materials, please refer to page T5.

The steel parts of kits 1, 2 and 3 have the following surfaces:
Screws, bushes, cover plates = Cr(VI)-free galvanized
Welding plate = phosphated
Other compositions available on request.

2 clamp halves, weld plate **short,** slot head bolts and bushes

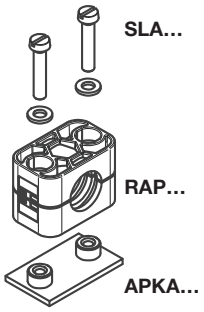

2 clamp halves, weld plate **short,** socket head bolts and bushes

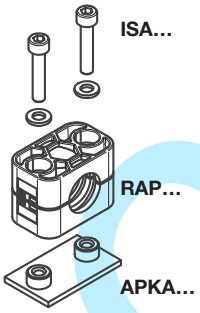

2 clamp halves, weld plate **short,** cover plate hex. head bolts

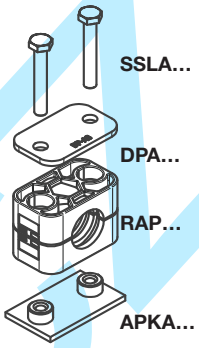

clamp size	Tube O.D. mm	Tube NB	Tube O.D.	Order code	Order code	Order code
0[3)]	4.0			**RAP1-004**	**RAP2–004**	**RAP3–004**
	6.0			**RAP1–006**	**RAP2–006**	**RAP3–006**
	6.4		1/4	**RAP1–006.4**	**RAP2–006.4**	**RAP3–006.4**
	8.0		5/16	**RAP1–008**	**RAP2–008**	**RAP3–008**
	9.5		3/8	**RAP1–009.5**	**RAP2–009.5**	**RAP3–009.5**
	10.0	G 1/8		**RAP1–010**	**RAP2–010**	**RAP3–010**
	12.0			**RAP1–012**	**RAP2–012**	**RAP3–012**
1	4.0			**RAP1-104**	**RAP2–104**	**RAP3–104**
	6.0			**RAP1–106**	**RAP2–106**	**RAP3–106**
	6.4		1/4	**RAP1–106.4**	**RAP2–106.4**	**RAP3–106.4**
	8.0		5/16	**RAP1–108**	**RAP2–108**	**RAP3–108**
	9.5		3/8	**RAP1–109.5**	**RAP2–109.5**	**RAP3–109.5**
	10.0	G 1/8		**RAP1–110**	**RAP2–110**	**RAP3–110**
	12.0			**RAP1–112**	**RAP2–112**	**RAP3–112**
2	12.7		1/2	**RAP1–212.7**	**RAP2–212.7**	**RAP3–212.7**
	13.5	G 1/4		**RAP1–213.5**	**RAP2–213.5**	**RAP3–213.5**
	14.0			**RAP1–214**	**RAP2–214**	**RAP3–214**
	15.0			**RAP1–215**	**RAP2–215**	**RAP3–215**
	16.0		5/8	**RAP1–216**	**RAP2–216**	**RAP3–216**
	17.2	G 3/8		**RAP1–217.2**	**RAP2–217.2**	**RAP3–217.2**
	18.0			**RAP1–218**	**RAP2–218**	**RAP3–218**
3	19.0		3/4	**RAP1–319**	**RAP2–319**	**RAP3–319**
	20.0			**RAP1–320**	**RAP2–320**	**RAP3–320**
	21.3	G 1/2		**RAP1–321.3**	**RAP2–321.3**	**RAP3–321.3**
	22.0			**RAP1–322**	**RAP2–322**	**RAP3–322**
	23.0			**RAP1–323**	**RAP2–323**	**RAP3–323**
	25.0		1	**RAP1–325**	**RAP2–325**	**RAP3–325**
	25.4			**RAP1-325.4**	**RAP2–325.4**	**RAP3–325.4**
4	26.9	G 3/4		**RAP1–426.9**	**RAP2–426.9**	**RAP3–426.9**
	28.0			**RAP1–428**	**RAP2–428**	**RAP3–428**
	30.0			**RAP1–430**	**RAP2–430**	**RAP3–430**
5	32.0		1 1/4	**RAP1–532**	**RAP2–532**	**RAP3–532**
	33.7	G 1		**RAP1–533.7**	**RAP2–533.7**	**RAP3–533.7**
	35.0			**RAP1–535**	**RAP2–535**	**RAP3–535**
	38.0		1 1/2	**RAP1–538**	**RAP2–538**	**RAP3–538**
	40.0			**RAP1–540**	**RAP2–540**	**RAP3–540**
	42.0	G 1 1/4		**RAP1–542**	**RAP2–542**	**RAP3–542**
6	44.5		1 3/4	**RAP1–644.5**	**RAP2–644.5**	**RAP3–644.5**
	45.0			**RAP1–645**	**RAP2–645**	**RAP3–645**
	48.0	G 1 1/2		**RAP1–648**	**RAP2–648**	**RAP3–648**
	50.0			**RAP1–650**	**RAP2–650**	**RAP3–650**
	50.8		2	**RAP1–650.8**	**RAP2–650.8**	**RAP3–650.8**
	52.0			**RAP1–652**	**RAP2–652**	**RAP3–652**
	54.0			**RAP1-654**	**RAP2–654**	**RAP3-–654**
	55.0			**RAP1–655**	**RAP2–655**	**RAP3–655**
	57.0			**RAP1–657**	**RAP2–657**	**RAP3–657**

Continuation see next page …

Tube clamps series A (Light construction series) – Complete range

Order codes for clamp halves:

Material	Interior surface	Order code
Polypropylene	grooved	**RAP**
	smooth	**RAPG**
Polyamide	grooved	**RAN**
	smooth	**RANG**
Rubber	smooth	**RAVG**[1)]
Aluminium	grooved	**RAA**[2)]

(Please exchange as required standard abbreviation RAP in column for "Order code")

For flame- or corrosion retardant materials, please refer to page T5.

The steel parts of kits 1, 2 and 3 have the following surfaces:
Screws, bushes, cover plates = Cr(VI)-free galvanized
Welding plate = phosphated
Other compositions available on request.

2 clamp halves, weld plate **short,** slot head bolts and bushes

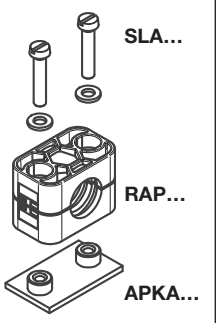

2 clamp halves, weld plate **short,** socket head bolts and bushes

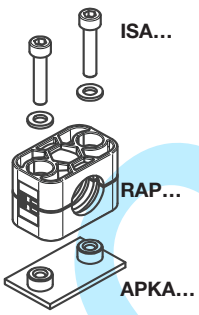

2 clamp halves, weld plate **short,** cover plate hex. head bolts

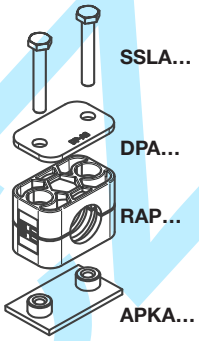

clamp size	Tube O.D. mm	Tube NB	Tube O.D.	Order code	Order code	Order code
7	57.2	G 2	2 1/4	**RAP1–757.2**	**RAP2–757.2**	**RAP3–757.2**
	60.3			**RAP1–760.3**	**RAP2–760.3**	**RAP3–760.3**
	63.5		2 1/2	**RAP1–763.5**	**RAP2–763.5**	**RAP3–763.5**
	70.0		2 3/4	**RAP1–770**	**RAP2–770**	**RAP3–770**
	73.0			**RAP1–773**	**RAP2–773**	**RAP3–773**
	76.1	G 2 1/2	3	**RAP1–776.1**	**RAP2–776.1**	**RAP3–776.1**
8	88.9	G 3		**RAP1–888.9**	**RAP2–888.9**	**RAP3–888.9**
	101.8		4	**RAP1–8101.8**	**RAP2–8101.8**	**RAP3–8101.8**

Delivery in unassembled individual components.

[1)] When assembling solid rubber clamps, cover plates, hexagon screws and locking washers must be used.

[2)] Aluminium size 0-6.

[3)] Contrary to the illustration size 0 clamps are secured by only one screw.

kovaz.cz

T

Tube clamps series A (Light construction series) – Complete range

Order codes for clamp halves:

Material	Interior surface	Order code
Polypropylene	grooved	**RAP**
	smooth	**RAPG**
Polyamide	grooved	**RAN**
	smooth	**RANG**
Rubber	smooth	**RAVG**[1)]
Aluminium	grooved	**RAA**[2)]

(Please exchange as required standard abbreviation RAP in column for "Order code")

For flame- or corrosion retardant materials, please refer to page T5.

The steel parts of kits 4, 5 and 6 have the following surfaces:
Screws, bushes, cover plates = Cr(VI)-free galvanized
Welding plate = phosphated
Other compositions available on request.

2 clamp halves, weld/ screw plate, slot head bolts and bushes

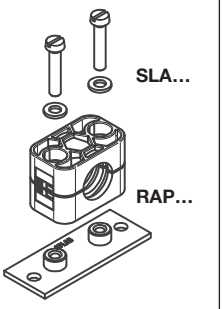

2 clamp halves, weld/ screw plate, socket head bolts and bushes

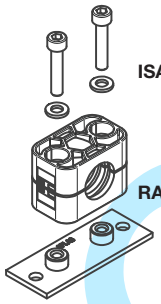

2 clamp halves, weld/ screw plate, cover plate and hex. head bolts

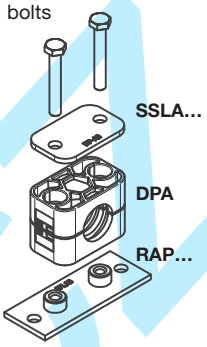

clamp size	Tube O.D. mm	Tube NB	Tube O.D.	Order code	Order code	Order code
0[3)]	4.0	G 1/8	1/4	**RAP4–004**	**RAP5–004**	**RAP6–004**
	6.0			**RAP4–006**	**RAP5–006**	**RAP6–006**
	6.4			**RAP4–006.4**	**RAP5–006.4**	**RAP6–006.4**
	8.0		5/16	**RAP4–008**	**RAP5–008**	**RAP6–008**
	9.5		3/8	**RAP4–009.5**	**RAP5–009.5**	**RAP6–009.5**
	10.0			**RAP4–010**	**RAP5–010**	**RAP6–010**
	12.0			**RAP4–012**	**RAP5–012**	**RAP6–012**
1	4.0	G 1/8	1/4	**RAP4–104**	**RAP5–104**	**RAP6–104**
	6.0			**RAP4–106**	**RAP5–106**	**RAP6–106**
	6.4			**RAP4–106.4**	**RAP5–106.4**	**RAP6–106.4**
	8.0		5/16	**RAP4–108**	**RAP5–108**	**RAP6–108**
	9.5		3/8	**RAP4–109.5**	**RAP5–109.5**	**RAP6–109.5**
	10.0			**RAP4–110**	**RAP5–110**	**RAP6–110**
	12.0			**RAP4–112**	**RAP5–112**	**RAP6–112**
2	12.7	G 1/4	1/2	**RAP4–212.7**	**RAP5–212.7**	**RAP6–212.7**
	13.5			**RAP4–213.5**	**RAP5–213.5**	**RAP6–213.5**
	14.0			**RAP4–214**	**RAP5–214**	**RAP6–214**
	15.0			**RAP4–215**	**RAP5–215**	**RAP6–215**
	16.0		5/8	**RAP4–216**	**RAP5–216**	**RAP6–216**
	17.2	G 3/8		**RAP4–217.2**	**RAP5–217.2**	**RAP6–217.2**
	18.0			**RAP4–218**	**RAP5–218**	**RAP6–218**
3	19.0	G 1/2	3/4	**RAP4–319**	**RAP5–319**	**RAP6–319**
	20.0			**RAP4–320**	**RAP5–320**	**RAP6–320**
	21.3			**RAP4–321.3**	**RAP5–321.3**	**RAP6–321.3**
	22.0			**RAP4–322**	**RAP5–322**	**RAP6–322**
	23.0			**RAP4–323**	**RAP5–323**	**RAP6–323**
	25.0			**RAP4–325**	**RAP5–325**	**RAP6–325**
	25.4		1	**RAP4–325.4**	**RAP5–325.4**	**RAP6–325.4**
4	26.9	G 3/4		**RAP4–426.9**	**RAP5–426.9**	**RAP6–426.9**
	28.0			**RAP4–428**	**RAP5–428**	**RAP6–428**
	30.0			**RAP4–430**	**RAP5–430**	**RAP6–430**
5	32.0	G 1	1 1/4	**RAP4–532**	**RAP5–532**	**RAP6–532**
	33.7			**RAP4–533.7**	**RAP5–533.7**	**RAP6–533.7**
	35.0			**RAP4–535**	**RAP5–535**	**RAP6–535**
	38.0		1 1/2	**RAP4–538**	**RAP5–538**	**RAP6–538**
	40.0			**RAP4–540**	**RAP5–540**	**RAP6–540**
	42.0	G 1 1/4		**RAP4–542**	**RAP5–542**	**RAP6–542**
6	44.5	G 1 1/2	1 3/4	**RAP4–644.5**	**RAP5–644.5**	**RAP6–644.5**
	45.0			**RAP4–645**	**RAP5–645**	**RAP6–645**
	48.0			**RAP4–648**	**RAP5–648**	**RAP6–648**
	50.0			**RAP4–650**	**RAP5–650**	**RAP6–650**
	50.8			**RAP4–650.8**	**RAP5–650.8**	**RAP6–650.8**
	52.0		2	**RAP4–652**	**RAP5–652**	**RAP6–652**
	54.0			**RAP4–654**	**RAP5–654**	**RAP6–654**
	55.0			**RAP4–655**	**RAP5–655**	**RAP6–655**
	57.0			**RAP4–657**	**RAP5–657**	**RAP6–657**

Continuation see next page …

Tube clamps series A (Light construction series) – Complete range

Order codes for clamp halves:

Material	Interior surface	Order code
Polypropylene	grooved	**RAP**
	smooth	**RAPG**
Polyamide	grooved	**RAN**
	smooth	**RANG**
Rubber	smooth	**RAVG**[1]
Aluminium	grooved	**RAA**[2]

(Please exchange as required standard abbreviation RAP in column for "Order code")

For flame- or corrosion retardant materials, please refer to page T5.

The steel parts of kits 4, 5 and 6 have the following surfaces:
Screws, bushes, cover plates = Cr(VI)-free galvanized
Welding plate = phosphated
Other compositions available on request.

2 clamp halves, weld/ screw plate, slot head bolts and bushes

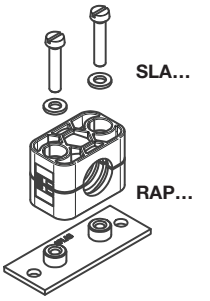

2 clamp halves, weld/ screw plate, socket head bolts and bushes

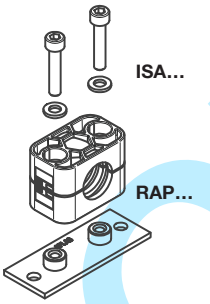

2 clamp halves, weld/ screw plate, cover plate and hex. head bolts

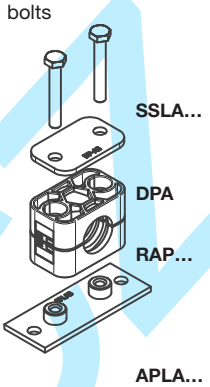

clamp size	Tube O.D. mm	Tube NB	Tube O.D.	Order code	Order code	Order code
7	57.2	G 2	2 1/4	**RAP4–757.2**	**RAP5–757.2**	**RAP6–757.2**
	60.3			**RAP4–760.3**	**RAP5–760.3**	**RAP6–760.3**
	63.5		2 1/2	**RAP4–763.5**	**RAP5–763.5**	**RAP6–763.5**
	70.0		2 3/4	**RAP4–770**	**RAP5–770**	**RAP6–770**
	73.0			**RAP4–773**	**RAP5–773**	**RAP6–773**
	76.1	G 2 1/2	3	**RAP4–776.1**	**RAP5–776.1**	**RAP6–776.1**
8	88.9	G 3	3 1/2	**RAP4–888.9**	**RAP5–888.9**	**RAP6–888.9**
	101.8		4	**RAP4–8101.8**	**RAP5–8101.8**	**RAP6–8101.8**

Delivery in unassembled individual components.

[1]) When assembling solid rubber clamps, cover plates, hexagon screws and locking washers must be used.

[2]) Aluminium size 0-6.

[3]) Contrary to the illustration size 0 clamps are secured by only one screw.

kovaz.cz

T

Tube clamps series A (Light construction series) – Complete range

Order codes for clamp halves:

Material	Interior surface	Order code
Polypropylene	grooved	**RAP**
	smooth	**RAPG**
Polyamide	grooved	**RAN**
	smooth	**RANG**
Rubber	smooth	**RAVG**[1)]
Aluminium	grooved	**RAA**[2)]

(Please exchange as required standard abbreviation RAP in column for "Order code")

For flame- or corrosion retardant materials, please refer to page T5.

The steel parts of kits 9, 10 and 12 have the following surfaces:
Screws, bushes, cover plates = Cr(VI)-free galvanized
Welding plate = phosphated
Other compositions available on request.

2 clamp halves, rail nuts, slot head bolts and bushes

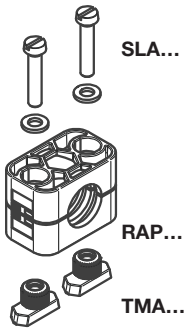

2 clamp halves, rail nuts, socket head bolts and bushes

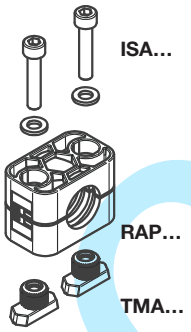

2 clamp halves, rail nuts, cover plate and hex. head bolts

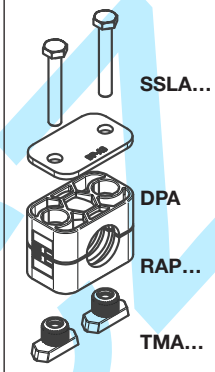

clamp size	Tube O.D. mm	Tube NB	Tube O.D.	Order code	Order code	Order code
0[3)]	4.0			**RAP9–004**	**RAP10–004**	**RAP12–004**
	6.0			**RAP9–006**	**RAP10–006**	**RAP12–006**
	6.4		1/4	**RAP9–006.4**	**RAP10–006.4**	**RAP12–006.4**
	8.0		5/16	**RAP9–008**	**RAP10–008**	**RAP12–008**
	9.5		3/8	**RAP9–009.5**	**RAP10–009.5**	**RAP12–009.5**
	10.0	G 1/8		**RAP9–010**	**RAP10–010**	**RAP12–010**
	12.0			**RAP9–012**	**RAP10–012**	**RAP12–012**
1	4.0			**RAP9–104**	**RAP10–104**	**RAP12–104**
	6.0			**RAP9–106**	**RAP10–106**	**RAP12–106**
	6.4		1/4	**RAP9–106.4**	**RAP10–106.4**	**RAP12–106.4**
	8.0		5/16	**RAP9–108**	**RAP10–108**	**RAP12–108**
	9.5		3/8	**RAP9–109.5**	**RAP10–109.5**	**RAP12–109.5**
	10.0	G 1/8		**RAP9–110**	**RAP10–110**	**RAP12–110**
	12.0			**RAP9–112**	**RAP10–112**	**RAP12–112**
2	12.7		1/2	**RAP9–212.7**	**RAP10–212.7**	**RAP12–212.7**
	13.5	G 1/4		**RAP9–213.5**	**RAP10–213.5**	**RAP12–213.5**
	14.0			**RAP9–214**	**RAP10–214**	**RAP12–214**
	15.0			**RAP9–215**	**RAP10–215**	**RAP12–215**
	16.0		5/8	**RAP9–216**	**RAP10–216**	**RAP12–216**
	17.2	G 3/8		**RAP9–217.2**	**RAP10–217.2**	**RAP12–217.2**
	18.0			**RAP9–218**	**RAP10–218**	**RAP12–218**
3	19.0		3/4	**RAP9–319**	**RAP10–319**	**RAP12–319**
	20.0			**RAP9–320**	**RAP10–320**	**RAP12–320**
	21.3	G 1/2		**RAP9–321.3**	**RAP10–321.3**	**RAP12–321.3**
	22.0			**RAP9–322**	**RAP10–322**	**RAP12–322**
	23.0			**RAP9–323**	**RAP10–323**	**RAP12–323**
	25.0			**RAP9–325**	**RAP10–325**	**RAP12–325**
	25.4		1	**RAP9–325.4**	**RAP10–325.4**	**RAP12–325.4**
4	26.9	G 3/4		**RAP9–426.9**	**RAP10–426.9**	**RAP12–426.9**
	28.0			**RAP9–428**	**RAP10–428**	**RAP12–428**
	30.0			**RAP9–430**	**RAP10–430**	**RAP12–430**
5	32.0		1 1/4	**RAP9–532**	**RAP10–532**	**RAP12–532**
	33.7	G 1		**RAP9–533.7**	**RAP10–533.7**	**RAP12–533.7**
	35.0			**RAP9–535**	**RAP10–535**	**RAP12–535**
	38.0		1 1/2	**RAP9–538**	**RAP10–538**	**RAP12–538**
	40.0			**RAP9–540**	**RAP10–540**	**RAP12–540**
	42.0	G 1 1/4		**RAP9–542**	**RAP10–542**	**RAP12–542**
6	44.5		1 3/4	**RAP9–644.5**	**RAP10–644.5**	**RAP12–644.5**
	45.0			**RAP9–645**	**RAP10–645**	**RAP12–645**
	48.0	G 1 1/2		**RAP9–648**	**RAP10–648**	**RAP12–648**
	50.0			**RAP9–650**	**RAP10–650**	**RAP12–650**
	50.8		2	**RAP9–650.8**	**RAP10–650.8**	**RAP12–650.8**
	52.0			**RAP9–652**	**RAP10–652**	**RAP12–652**
	54.0			**RAP9–654**	**RAP10–654**	**RAP12–654**
	55.0			**RAP9–655**	**RAP10–655**	**RAP12–655**
	57.0			**RAP9–657**	**RAP10–657**	**RAP12–657**

Continuation see next page …

Tube clamps series A (Light construction series) – Complete range

Order codes for clamp halves:

Material	Interior surface	Order code
Polypropylene	grooved	**RAP**
	smooth	**RAPG**
Polyamide	grooved	**RAN**
	smooth	**RANG**
Rubber	smooth	**RAVG**[1)]
Aluminium	grooved	**RAA**[2)]

(Please exchange as required standard abbreviation RAP in column for "Order code")

For flame- or corrosion retardant materials, please refer to page T5.

The steel parts of kits 9, 10 and 12 have the following surfaces:
Screws, bushes, cover plates = Cr(VI)-free galvanized
Welding plate = phosphated
Other compositions available on request.

2 clamp halves, rail nuts, slot head bolts and bushes

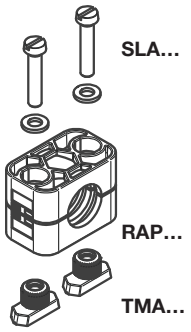

2 clamp halves, rail nuts, socket head bolts and bushes

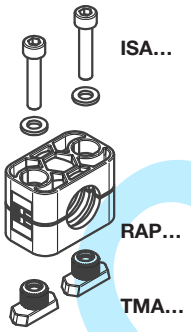

2 clamp halves, rail nuts, cover plate and hex. head bolts

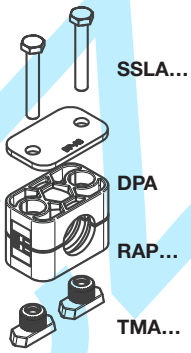

clamp size	Tube O.D. mm	Tube NB	Tube O.D.	Order code	Order code	Order code
7	57.2	G 2	2 1/4	**RAP9–757.2**	**RAP10–757.2**	**RAP12–757.2**
	60.3			**RAP9–760.3**	**RAP10–760.3**	**RAP12–760.3**
	63.5		2 1/2	**RAP9–763.5**	**RAP10–763.5**	**RAP12–763.5**
	70.0		2 3/4	**RAP9–770**	**RAP10–770**	**RAP12–770**
	73.0			**RAP9–773**	**RAP10–773**	**RAP12–773**
	76.1	G 2 1/2	3	**RAP9–776.1**	**RAP10–776.1**	**RAP12–776.1**
8	88.9	G 3	3 1/2	**RAP9–888.9**	**RAP10–888.9**	**RAP12–888.9**
	101.8		4	**RAP9–8101.8**	**RAP10–8101.8**	**RAP12–8101.8**

Delivery in unassembled individual components.

[1)] When assembling solid rubber clamps, cover plates, hexagon screws and locking washers must be used.

[2)] Aluminium size 0-6.

[3)] Contrary to the illustration size 0 clamps are secured by only one screw.

kovaz.sk

T

Tube clamps series A – Complete range

Order codes for clamp halves:

Material	Interior surface	Order code
Polypropylene	grooved	**RAP**
	smooth	**RAPG**
Polyamide	grooved	**RAN**
	smooth	**RANG**
Rubber	smooth	**RAVG**[1)]
Aluminium	grooved	**RAA**[2)]

(Please exchange as required standard abbreviation RAP in column for "Order code")

For flame- or corrosion retardant materials, please refer to page T5.

The steel parts of kits 13 and 14 have the following surfaces:
Screws, bushes, cover plates = Cr(VI)-free galvanized
Welding plate = phosphated
Other compositions available on request.

2 clamp halves, slot heads and bushes

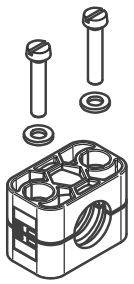

SLA...

RAP...

2 clamp halves, socket head bolts and bushes

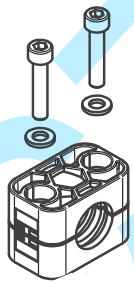

ISA...

RAP...

clamp size	Tube O.D. mm	Tube NB	Tube O.D.	Order code	Order code
0[3)]	4.0			**RAP13–004**	**RAP14–004**
	6.0			**RAP13–006**	**RAP14–006**
	6.4		1/4	**RAP13–006.4**	**RAP14–006.4**
	8.0		5/16	**RAP13–008**	**RAP14–008**
	9.5		3/8	**RAP13–009.5**	**RAP14–009.5**
	10.0	G 1/8		**RAP13–010**	**RAP14–010**
	12.0			**RAP13–012**	**RAP14–012**
1	4.0			**RAP13–104**	**RAP14–104**
	6.0			**RAP13–106**	**RAP14–106**
	6.4		1/4	**RAP13–106.4**	**RAP14–106.4**
	8.0		5/16	**RAP13–108**	**RAP14–108**
	9.5		3/8	**RAP13–109.5**	**RAP14–109.5**
	10.0	G 1/8		**RAP13–110**	**RAP14–110**
	12.0			**RAP13–112**	**RAP14–112**
2	12.7		1/2	**RAP13–212.7**	**RAP14–212.7**
	13.5	G 1/4		**RAP13–213.5**	**RAP14–213.5**
	14.0			**RAP13–214**	**RAP14–214**
	15.0			**RAP13–215**	**RAP14–215**
	16.0		5/8	**RAP13–216**	**RAP14–216**
	17.2	G 3/8		**RAP13–217.2**	**RAP14–217.2**
	18.0			**RAP13–218**	**RAP14–218**
3	19.0		3/4	**RAP13–319**	**RAP14–319**
	20.0			**RAP13–320**	**RAP14–320**
	21.3	G 1/2		**RAP13–321.3**	**RAP14–321.3**
	22.0			**RAP13–322**	**RAP14–322**
	23.0			**RAP13–323**	**RAP14–323**
	25.0			**RAP13–325**	**RAP14–325**
	25.4		1	**RAP13–325.4**	**RAP14–325.4**
4	26.9	G 3/4		**RAP13–426.9**	**RAP14–426.9**
	28.0			**RAP13–428**	**RAP14–428**
	30.0			**RAP13–430**	**RAP14–430**
5	32.0		1 1/4	**RAP13–532**	**RAP14–532**
	33.7	G 1		**RAP13–533.7**	**RAP14–533.7**
	35.0			**RAP13–535**	**RAP14–535**
	38.0		1 1/2	**RAP13–538**	**RAP14–538**
	40.0			**RAP13–540**	**RAP14–540**
	42.0	G 1 1/4		**RAP13–542**	**RAP14–542**
6	44.5		1 3/4	**RAP13–644.5**	**RAP14–644.5**
	45.0			**RAP13–645**	**RAP14–645**
	48.0	G 1 1/2		**RAP13–648**	**RAP14–648**
	50.0			**RAP13–650**	**RAP14–650**
	50.8		2	**RAP13–650.8**	**RAP14–650.8**
	52.0			**RAP13–652**	**RAP14–652**
	54.0			**RAP13–654**	**RAP14–654**
	55.0			**RAP13–655**	**RAP14–655**
	57.0			**RAP13–657**	**RAP14–657**

Continuation see next page …

Tube clamps series A – Complete range

Order codes for clamp halves:

Material	Interior surface	Order code
Polypropylene	grooved	**RAP**
	smooth	**RAPG**
Polyamide	grooved	**RAN**
	smooth	**RANG**
Rubber	smooth	**RAVG**[1)]
Aluminium	grooved	**RAA**[2)]

(Please exchange as required standard abbreviation RAP in column for "Order code")

For flame- or corrosion retardant materials, please refer to page T5.

The steel parts of kits 13 and 14 have the following surfaces:
Screws, bushes, cover plates = Cr(VI)-free galvanized
Welding plate = phosphated
Other compositions available on request.

2 clamp halves, slot heads and bushes

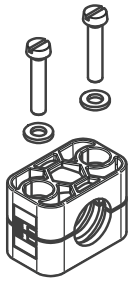

SLA...

RAP...

2 clamp halves, socket head bolts and bushes

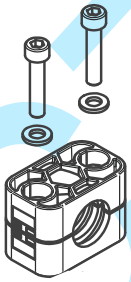

ISA...

RAP...

clamp size	Tube O.D. mm	Tube NB	Tube O.D.	Order code	Order code
7	57.2	G 2	2 1/4	**RAP13-757.2**	**RAP14-757.2**
	60.3			**RAP13-760.3**	**RAP14-760.3**
	63.5		2 1/2	**RAP13-763.5**	**RAP14-763.5**
	70.0		2 3/4	**RAP13-770**	**RAP14-770**
	73.0			**RAP13-773**	**RAP14-773**
	76.1	G 2 1/2	3	**RAP13-776.1**	**RAP14-776.1**
8	88.9	G3	3 1/2	**RAP13-888.9**	**RAP14-888.9**
	101.8		4	**RAP13-8101.8**	**RAP14-8101.8**

Delivery in unassembled individual components.

[1)] When assembling solid rubber clamps, cover plates, hexagon screws and locking washers must be used.

[2)] Aluminium size 0-6.

[3)] Contrary to the illustration size 0 clamps are secured by only one screw.

kovaz.cz

T

Tube clamps series A – Complete range

Order codes for clamp halves:

Material	Interior surface	Order code
Polypropylene	grooved	**RAP**
	smooth	**RAPG**
Polyamide	grooved	**RAN**
	smooth	**RANG**
Rubber	smooth	**RAVG**[1)]
Aluminium	grooved	**RAA**[2)]

(Please exchange as required standard abbreviation RAP in column for "Order code")

For flame- or corrosion retardant materials, please refer to page T5.

The steel parts of kits 16 and 18 have the following surfaces:
Screws, bushes, cover plates = Cr(VI)-free galvanized
Welding plate = phosphated
Other compositions available on request.

2 clamp halves, cover plate and hex. head bolts

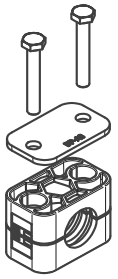

SSLA...

DPA...

RAP...

2 clamp halves, stacking bolts and locking plate

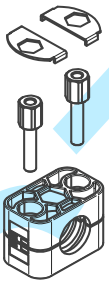

SBA...

ASA...

RAP...

clamp size	Tube O.D. mm	Tube NB	Tube O.D.	Order code	Order code
0[3)]	4.0	G 1/8	1/4	**RAP16–004**	**RAP18–004**
	6.0			**RAP16–006**	**RAP18–006**
	6.4			**RAP16–006.4**	**RAP18–006.4**
	8.0		5/16	**RAP16–008**	**RAP18–008**
	9.5		3/8	**RAP16–009.5**	**RAP18–009.5**
	10.0			**RAP16–010**	**RAP18–010**
	12.0			**RAP16–012**	**RAP18–012**
1	4.0	G 1/8	1/4	**RAP16–104**	**RAP18–104**
	6.0			**RAP16–106**	**RAP18–106**
	6.4			**RAP16–106.4**	**RAP18–106.4**
	8.0		5/16	**RAP16–108**	**RAP18–108**
	9.5		3/8	**RAP16–109.5**	**RAP18–109.5**
	10.0			**RAP16–110**	**RAP18–110**
	12.0			**RAP16–112**	**RAP18–112**
2	12.7	G 3/8	1/2	**RAP16–212.7**	**RAP18–212.7**
	13.5			**RAP16–213.5**	**RAP18–213.5**
	14.0			**RAP16–214**	**RAP18–214**
	15.0			**RAP16–215**	**RAP18–215**
	16.0		5/8	**RAP16–216**	**RAP18–216**
	17.2			**RAP16–217.2**	**RAP18–217.2**
	18.0			**RAP16–218**	**RAP18–218**
3	19.0	G 1/2	3/4	**RAP16–319**	**RAP18–319**
	20.0			**RAP16–320**	**RAP18–320**
	21.3			**RAP16–321.3**	**RAP18–321.3**
	22.0			**RAP16–322**	**RAP18–322**
	23.0			**RAP16–323**	**RAP18–323**
	25.0			**RAP16–325**	**RAP18–325**
	25.4		1	**RAP16–325.4**	**RAP18–325.4**
4	26.9	G 3/4		**RAP16–426.9**	**RAP18–426.9**
	28.0			**RAP16–428**	**RAP18–428**
	30.0			**RAP16–430**	**RAP18–430**
5	32.0	G 1	1 1/4	**RAP16–532**	**RAP18–532**
	33.7			**RAP16–533.7**	**RAP18–533.7**
	35.0			**RAP16–535**	**RAP18–535**
	38.0		1 1/2	**RAP16–538**	**RAP18–538**
	40.0			**RAP16–540**	**RAP18–540**
	42.0	G 1 1/4		**RAP16–542**	**RAP18–542**
6	44.5	G 1 1/2	1 3/4	**RAP16–644.5**	**RAP18–644.5**
	45.0			**RAP16–645**	**RAP18–645**
	48.0			**RAP16–648**	**RAP18–648**
	50.0			**RAP16–650**	**RAP18–650**
	50.8		2	**RAP16–650.8**	**RAP18–650.8**
	52.0			**RAP16–652**	**RAP18–652**
	54.0			**RAP16–654**	**RAP18–654**
	55.0			**RAP16–655**	**RAP18–655**
	57.0			**RAP16–657**	**RAP18–657**

Continuation see next page …

KOVAL.CZ

Tube clamps series A – Complete range

Order codes for clamp halves:

Material	Interior surface	Order code
Polypropylene	grooved	**RAP**
	smooth	**RAPG**
Polyamide	grooved	**RAN**
	smooth	**RANG**
Rubber	smooth	**RAVG**[1)]
Aluminium	grooved	**RAA**[2)]

(Please exchange as required standard abbreviation RAP in column for "Order code")

For flame- or corrosion retardant materials, please refer to page T5.

The steel parts of kits 16 and 18 have the following surfaces:
Screws, bushes, cover plates = Cr(VI)-free galvanized
Welding plate = phosphated
Other compositions available on request.

2 clamp halves, cover plate and hex. head bolts

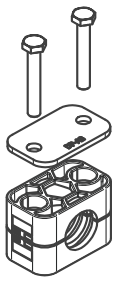

SSLA

DPA...

RAP...

2 clamp halves, stacking bolts and locking plate

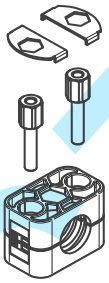

SBA...

ASA...

RAP...

clamp size	Tube O.D. mm	Tube NB	Tube O.D.	Order code	Order code
7	57.2	G 2	2 1/4	**RAP16–757.2**	**RAP18–757.2**
	60.3			**RAP16–760.3**	**RAP18–760.3**
	63.5		2 1/2	**RAP16–763.5**	**RAP18–763.5**
	70.0		2 3/4	**RAP16–770**	**RAP18–770**
	73.0			**RAP16–773**	**RAP18–773**
	76.1	G 2 1/2	3	**RAP16–776.1**	**RAP18–776.1**
8	88.9	G 3	3 1/2	**RAP16–888.9**	**RAP18–888.9**
	101.8		4	**RAP16–8101.8**	**RAP18–8101.8**

Delivery in unassembled individual components.

[1)] When assembling solid rubber clamps, cover plates, hexagon screws and locking washers must be used.

[2)] Aluminium sizes 0-6.

[3)] Contrary to the illustration size 0 clamps are secured by only one screw.

kovaz.cz

T

Tube clamps series B (Twin-tube clamps) – Components

DIN 3015, part 3

Order codes for clamp halves:

Material	Interior surface	Order code
Polypropylene	grooved	**RBP**
	smooth	**RBPG**
Polyamide	grooved	**RBN**
	smooth	**RBNG**
Rubber	smooth	**RBVG**[1]

(Please exchange as required standard abbreviation RBP in column for "clamp halves")
For flame- or corrosion retardant materials, please refer to page T5.

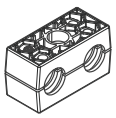

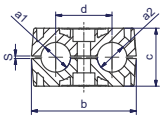

Width: 30 mm

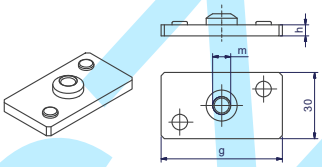

clamp size	Tube O.D. mm	Tube NB	Tube O.D.	1 part 2 clamp halves[2]) RBP… Order code	dimensions: b	c	d	s	weld plate with locking device APB… Order code	dimensions: g	m	h
1	6.0			**RBP106X**	36	27.0	20	1.0	**APB1...***	37	M6	3
	6.4		1/4	**RBP106.4X**								
	8.0		5/16	**RBP108X**								
	9.5		3/8	**RBP109.5X**								
	10.0	G 1/8		**RBP110X**								
	12.0			**RBP112X**								
2	12.7		1/2	**RBP212.7X**	53	27.4	29	1.2	**APB2...***	55	M8	5
	13.5	G 1/4		**RBP213.5X**								
	14.0			**RBP214X**								
	15.0			**RBP215X**								
	16.0		5/8	**RBP216X**								
	17.2	G 3/8		**RBP217.2X**								
	18.0			**RBP218X**								
3	19.0		3/4	**RBP319X**	67	37.0	36	1.6	**APB3...***	70	M8	5
	20.0			**RBP320X**								
	21.3	G 1/2		**RBP321.3X**								
	22.0			**RBP322X**								
	25.0			**RBP325X**								
	25.4		1	**RBP325.4X**								
4	26.9	G 3/4		**RBP426.9X**	82	42.0	45	2.0	**APB4...***	85	M8	5
	28.0			**RBP428X**								
	30.0			**RBP430X**								
5	32.0		1 1/4	**RBP532X**	106	54.0	56	2.0	**APB5...***	110	M8	5
	33.7	G 1		**RBP533.7X**								
	35.0			**RBP535X**								
	38.0		1 1/2	**RBP538X**								
	40.0			**RBP540X**								
	42.0	G 1 1/4		**RBP542X**								

[1]) When assembling solid rubber clamps, cover plates, hexagon screws and locking washers must be used.
[2]) Twin-tube clamps with different outer tube diameters upon request.

*Please add the suffix below according to the surface/material required.

Order code suffixes		
Surface/material	**Suffix**	Example
Steel, phosphated	**X**	APB1X
Steel, zinc plated, Cr(VI)-free	**VZX**	APB1VZX
Stainless Steel 1.4571	**4571X**	APB14571X

Tube clamps series B (Twin-tube clamps) – Components

DIN 3015, part 3

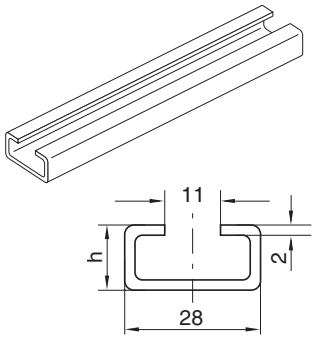

1 or 2 mtr

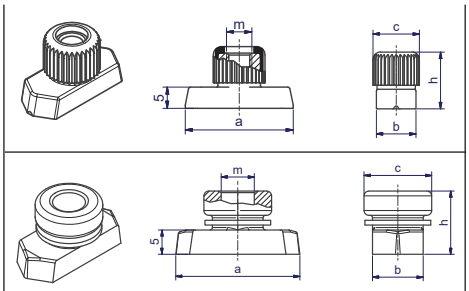

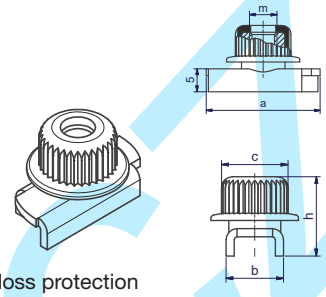

With loss protection
(See page T54).

clamp size	weld plate, angled		mounting rail nut						mounting rail nut					
	TS...A/B Order code	dimensions: h	**TM** Order code	dimensions: a	b	c	m	h	**TMA/TMB1...** Order code	dimensions: a	b	c	m	h
1	**TS11A/B1...*** **TS11A/B2...*** **TS14A/B1...*** **TS14B/B2...*** **TS30A/B1...*** **TS30B/B2...***	TS11: TS14: TS30:	**TMA/TMB1VERZX** **TMA/TMB1/4571X**	25.4	10.4	12	M6	14.5	**TMA/TMB1WLPVZX** **TMA/TMB1WLP71X**	25.4	10.4	12	M6	14.5
2			**TMB2VZX** **TMB24571X**	25.4	10.4	14	M8	13.0						
3														
4														
5														

*Please add the suffix below according to the surface/material required.

Order code suffixes		
Surface/material	**Suffix**	Example
Steel, phosphated	**X**	TS11A/B1X
Steel, zinc plated, Cr(VI)-free	**VZX**	TS11A/B1VZX
Stainless Steel 1.4571	**71X**	TS11A/B171X

kovaz.cz

T

Tube clamps series B (Twin-tube clamps) – Components

DIN 3015, part 3

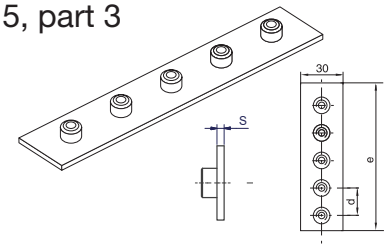

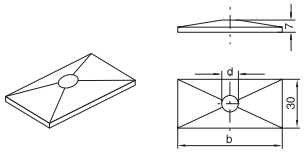

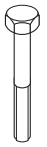

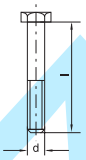

DIN 931/933

clamp size	weld plate angled (5 clamps) APR B... Order code	dimensions: d	e	s	cover plate DP B... Order code	dimensions: b	d	hexagonal screws SS B... Order code	dimensions: d × L
1	**APRB1X APRB1VZX APRB4571X**	40	196	3	**DPB1...***	34	6.6	**SSLA2/SSB1...***	M 06×35
2	**APRB2X APRB2VZX APRB24571X**	58	288	5	**DPB2...***	51	8.6	**SSB2...***	M 08×35
3	**APRB3X APRB3VZX APRB34571X**	72	358	5	**DPB3...***	64	8.6	**SSB3...***	M 08×45
4	**APRB4X APRB4VZX APRB44571X**	90	446	5	**DPB4...***	78	8.6	**SSB4...***	M 08×50
5	**APRB5X APRBVZX APRB4571X**	112	558	5	**DPB5...***	102	8.6	**SSB5...***	M 08×60

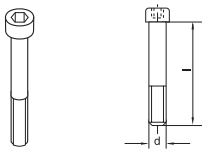

ISO 4762

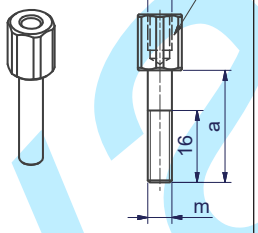

DIN 938

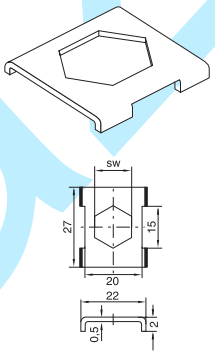

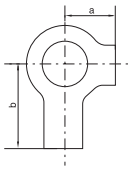

clamp size	socket head IS B... Order code	dimensions: d × L	stacking AS B... Order code	dimensions: a	m	SW	locking plate[1] SB B... Order code	dim.: SW	locking washer[2] US... Order code	dimensions: a	b
1	**ISA4...* (ISB1...*)**	M 06×35	**ASA0...* (ASB1...*)**	20	M6	11	**SBB1...***	11	**USA/USB1X[3]**	9	18
2	**ISB2...***	M 08×35	**ASB2...***	22	M8	12	**SBB2...***	12	**USB2X USB271X**	11	20
3	**ISB3...***	M 08×45	**ASB3...***	30	M8	12					
4	**ISB4...***	M 08×50	**ASB4...***	35	M8	12					
5	**ISB5...***	M 08×60	**ASB5...***	47	M8	12					

[1]) The use of stacking screws necessitates the use of locking plates in the construction assembly!
[2]) When assemblying solid rubber clamps, covering plates, he×agon screws and locking washers must be used.
[3]) Material = Stainless steel 1.4571

*Please add the suffix below according to the surface/material required.

Order code suffixes		
Surface/material	**Suffix**	Example
Steel, zinc plated, Cr(VI)-free	**X**	DPB1X
Stainless Steel 1.4571	**71X**	DPB14571X

Tube clamps series B – Complete range

Order codes for clamp halves:

Material	Interior surface	Order code
Polypropylene	grooved	**RBP**
	smooth	**RBPG**
Polyamide	grooved	**RBN**
	smooth	**RBNG**
Rubber	smooth	**RBVG**[1)]

(Please exchange as required standard abbreviation RBP in column for "Order code")

For flame- or corrosion retardant materials, please refer to page T5.

The steel parts of kits 1, 16 and 3 have the following surfaces:
Screws, bushes, cover plates = Cr(VI)-free galvanized
Welding plate = phosphated
Other compositions available on request.

2 clamp halves, weld plate, cover plate, hex. head bolt

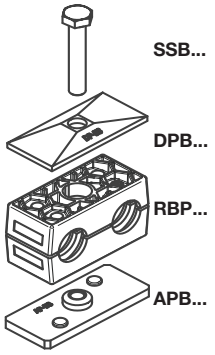

2 clamp halves, cover plate, hex. head bolt

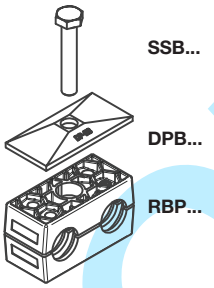

2 clamp halves, weld plate, cover plate, socket head bolt

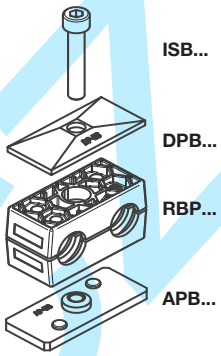

clamp size	Tube O.D. mm	Tube NB	Tube O.D.	Order code	Order code	Order code
1	6.0			**RBP1–106**	**RBP16-106**	**RBP3–106**
	6.4		1/4	**RBP1–106.4**	**RBP16-106.4**	**RBP3–106.4**
	8.0		5/16	**RBP1–108**	**RBP16-108**	**RBP3–108**
	9.5		3/8	**RBP1–109.5**	**RBP16-109.5**	**RBP3–109.5**
	10.0	G 1/8		**RBP1–110**	**RBP16-110**	**RBP3–110**
	12.0			**RBP1–112**	**RBP16-112**	**RBP3–112**
2	12.7		1/2	**RBP1–212.7**	**RBP16-212.7**	**RBP3–212.7**
	13.5	G 1/4		**RBP1–213.5**	**RBP16-213.5**	**RBP3–213.5**
	14.0			**RBP1–214**	**RBP16-214**	**RBP3–214**
	15.0			**RBP1–215**	**RBP16-215**	**RBP3–215**
	16.0		5/8	**RBP1–216**	**RBP16-216**	**RBP3–216**
	17.2	G 3/8		**RBP1–217.2**	**RBP16-217.2**	**RBP3–217.2**
	18.0			**RBP1–218**	**RBP16-218**	**RBP3–218**
3	19.0		3/4	**RBP1–319**	**RBP16-319**	**RBP3–319**
	20.0			**RBP1–320**	**RBP16-320**	**RBP3–320**
	21.3	G 1/2		**RBP1–321.3**	**RBP16-321.3**	**RBP3–321.3**
	22.0			**RBP1–322**	**RBP16-322**	**RBP3–322**
	25.0			**RBP1–325**	**RBP16-325**	**RBP3–325**
	25.4		1	**RBP1–325.4**	**RBP16-325.4**	**RBP3–325.4**
4	26.9	G 3/4		**RBP1–426.9**	**RBP16-426.9**	**RBP3–426.9**
	28.0			**RBP1–428**	**RBP16-428**	**RBP3–428**
	30.0			**RBP1–430**	**RBP16-430**	**RBP3–430**
5	32.0		1 1/4	**RBP1–532**	**RBP16-532**	**RBP3–532**
	33.7	G 1		**RBP1–533.7**	**RBP16-533.7**	**RBP3–533.7**
	35.0			**RBP1–535**	**RBP16-535**	**RBP3–535**
	38.0		1 1/2	**RBP1–538**	**RBP16-538**	**RBP3–538**
	40.0			**RBP1–540**	**RBP16-540**	**RBP3–540**
	42.0	G 1 1/4		**RBP1–542**	**RBP16-542**	**RBP3–542**

Delivery in unassembled individual components.

[1)] When assemblying solid rubber clamps, covering plates, hexagon screws and locking washers must be used.

Kovai.co

T

Tube clamps series B – Complete range

Order codes for clamp halves:

Material	Interior surface	Order code
Polypropylene	grooved	**RBP**
	smooth	**RBPG**
Polyamide	grooved	**RBN**
	smooth	**RBNG**
Rubber	smooth	**RBVG**[1)]

(Please exchange as required standard abbreviation RBP in column for "Order code")

For flame- or corrosion retardant materials, please refer to page T5.

The steel parts of kits 4, 5 and 8 have the following surfaces:
Screws, bushes, cover plates = Cr(VI)-free galvanized
Welding plate = phosphated
Other compositions available on request.

2 clamp halves, rail nut, cover plate, hex. head bolt

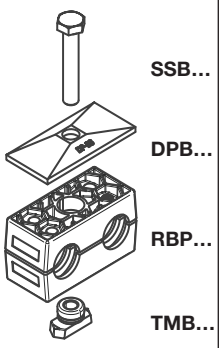

2 clamp halves, rail nut, cover plate, socket head bolt

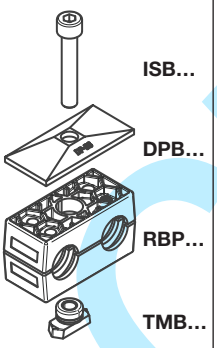

2 clamp halves, locking plate, stacking bolt

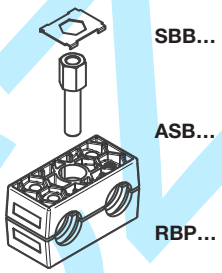

clamp size	Tube O.D. mm	Tube NB	Tube O.D.	Order code	Order code	Order code
1	6.0			**RBP4–106**	**RBP5–106**	**RBP8–106**
	6.4		1/4	**RBP4–106.4**	**RBP5–106.4**	**RBP8–106.4**
	8.0		5/16	**RBP4–108**	**RBP5–108**	**RBP8–108**
	9.5		3/8	**RBP4–109.5**	**RBP5–109.5**	**RBP8–109.5**
	10.0	G 1/8		**RBP4–110**	**RBP5–110**	**RBP8–110**
	12.0			**RBP4–112**	**RBP5–112**	**RBP8–112**
2	12.7		1/2	**RBP4–212.7**	**RBP5–212.7**	**RBP8–212.7**
	13.5	G 1/4		**RBP4–213.5**	**RBP5–213.5**	**RBP8–213.5**
	14.0			**RBP4–214**	**RBP5–214**	**RBP8–214**
	15.0			**RBP4–215**	**RBP5–215**	**RBP8–215**
	16.0		5/8	**RBP4–216**	**RBP5–216**	**RBP8–216**
	17.2	G 3/8		**RBP4–217.2**	**RBP5–217.2**	**RBP8–217.2**
	18.0			**RBP4–218**	**RBP5–218**	**RBP8–218**
3	19.0		3/4	**RBP4–319**	**RBP5–319**	**RBP8–319**
	20.0			**RBP4–320**	**RBP5–320**	**RBP8–320**
	21.3	G 1/2		**RBP4–321.3**	**RBP5–321.3**	**RBP8–321.3**
	22.0			**RBP4–322**	**RBP5–322**	**RBP8–322**
	25.0			**RBP4–325**	**RBP5–325**	**RBP8–325**
	25.4		1	**RBP4–325.4**	**RBP5–325.4**	**RBP8–325.4**
4	26.9	G 3/4		**RBP4–426.9**	**RBP5–426.9**	**RBP8–426.9**
	28.0			**RBP4–428**	**RBP5–428**	**RBP8–428**
	30.0			**RBP4–430**	**RBP5–430**	**RBP8–430**
5	32.0		1 1/4	**RBP4–532**	**RBP5–532**	**RBP8–532**
	33.7	G 1		**RBP4–533.7**	**RBP5–533.7**	**RBP8–533.7**
	35.0			**RBP4–535**	**RBP5–535**	**RBP8–535**
	38.0		1 1/2	**RBP4–538**	**RBP5–538**	**RBP8–538**
	40.0			**RBP4–540**	**RBP5–540**	**RBP8–540**
	42.0	G 1 1/4		**RBP4–542**	**RBP5–542**	**RBP8–542**

Delivery in unassembled individual components.

[1)] When assemblying solid rubber clamps, covering plates, he×agon screws and locking washers must be used.

Kovaz.cz

Tube clamps series C (Heavy series) – Components

DIN 3015, part 2

Order codes for clamp halves:

Material	Interior surface	Order code
Polypropylene	grooved	**RCP**
	smooth	**RCPG[1)]**
Polyamide	grooved	**RCN**
	smooth	**RCNG[1)]**
Rubber	grooved	**RCVR[1)2)]**
	smooth	**RCVG[1)2)]**
Aluminium	grooved	**RCA**

(Please exchange as required standard abbreviation RCP in column for "clamp halves")
For flame- or corrosion retardant materials, please refer to page T5.

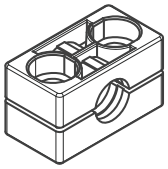

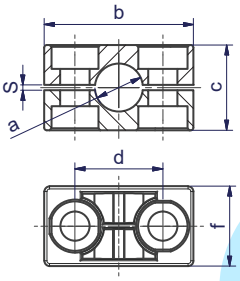

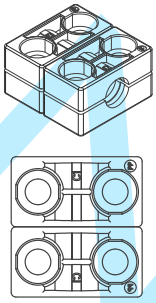

Please order 2x the single clamp (e.g. 2x RCP...)

clamp size	Tube O.D. mm a	Tube NB	Tube O.D.	1 part 2 clamp halves RCP... Order code	dimensions: b	c	d	s	f	dimensions: f
1	6.0			**RCP106X**	56	32	33	2	30	60
	8.0		5/16	**RCP108X**						
	9.5		3/8	**RCP109.5X**						
	10.0	G 1/8		**RCP110X**						
	12.0			**RCP112X**						
	12.7		1/2	**RCP112.7X**						
	13.5	G 1/4		**RCP113.5X**						
	14.0			**RCP114X**						
	15.0			**RCP115X**						
	16.0		5/8	**RCP116X**						
	17.2	G 3/8		**RCP117.2X**						
	18.0			**RCP118X**						
2	19.0		3/4	**RCP219X**	71	48	45	2	30	60
	20.0			**RCP220X**						
	21.3	G 1/2		**RCP221.3X**						
	22.0			**RCP222X**						
	23.0			**RCP223X**						
	25.0			**RCP225X**						
	25.4		1	**RCP225.4X**						
	26.9	G 3/4		**RCP226.9X**						
	28.0			**RCP228X**						
	30.0			**RCP230X**						
3	30.0			**RCP330X**	86	60	60	2	30	60
	32.0		1 1/4	**RCP332X**						
	33.7	G 1		**RCP333.7X**						
	35.0			**RCP335X**						
	38.0		1 1/2	**RCP338X**						
	40.0			**RCP340X**						
	42.0	G 1 1/4		**RCP342X**						
4	38.0		1 1/2	**RCP438X**	117	90	90	3	45	90
	40.0			**RCP440X**						
	42.0	G 1 1/4		**RCP442X**						
	45.0			**RCP445X**						
	48.3	G 1 1/2		**RCP448.3X**						
	50.0			**RCP450X**						
	51.0		2	**RCP451X**						
	52.0			**RCP452X**						
	55.0			**RCP455X**						
	57.0		2 1/4	**RCP457X**						
	60.3	G 2		**RCP460.3X**						
	63.0		2 1/2	**RCP463X**						
	65.0			**RCP465X**						
	70.0		2 3/4	**RCP470X**						

Continuation see next page ...

Tube clamps series C (Heavy series) – Components (Continued)

DIN 3015, part 2

Order codes for clamp halves:

Material	Interior surface	Order code
Polypropylene	grooved	**RCP**
	smooth	**RCPG[1])**
Polyamide	grooved	**RCN**
	smooth	**RCNG[1])**
Rubber	grooved	**RCVR[1)2)]**
	smooth	**RCVG[1)2)]**
Aluminium	grooved	**RCA**

(Please exchange as required standard abbreviation RCP in column for "clamp halves")
For flame- or corrosion retardant materials, please refer to page T5.

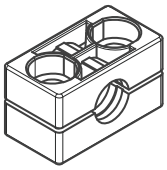

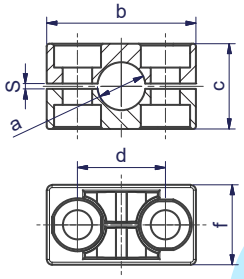

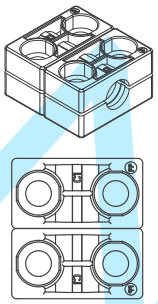

Please order 2x the single clamp (e.g. 2x RCP...)

clamp size	Tube O.D. mm a	Tube NB	Tube O.D.	1 part 2 clamp halves RCP... Order code	dimensions: b	c	d	s	f	dimensions: f
	65.0			**RCP565X**						
	70.0		2 3/4	**RCP570X**						
	73.0			**RCP573X**						
	75.0			**RCP575X**						
	76.1	G 2 1/2	3	**RCP576.1X**						
5	80.0			**RCP580X**	154	120	122	5	60	120
	82.5		3 1/4	**RCP582.5X**						
	85.0			**RCP585X**						
	88.0			**RCP588X**						
	88.9	G 3	3 1/2	**RCP588.9X**						
	90.0			**RCP590X**						
	90.0			**RCP690X**						
	97.0			**RCP697X**						
	100.0			**RCP6100X**						
	101.6	G 3 1/2	4	**RCP6101.6X**						
6	108.0		4 1/4	**RCP6108X**	206	168	168	6	80	160
	114.3	G 4	4 1/2	**RCP6114.3X**						
	115.0			**RCP6115X**						
	120.0			**RCP6120X**						
	127.0		5	**RCP6127X**						
	127.0		5	**RCP7127X**						
	130.0			**RCP7130X**						
	133.0		5 1/4	**RCP7133X**						
	140.0	G 5	5 1/2	**RCP7140X**						
7	150.0			**RCP7150X**	251	200	205	6	90	180
	152.4	G 5 1/2	6	**RCP7152.4X**						
	159.0		6 1/4	**RCP7159X**						
	165.1		6 1/2	**RCP7165.1X**						
	168.3	G 6	6 5/8	**RCP7168.3X**						
	168.3	G 6	6 5/8	**RCP8168.3X**						
	177.8		7	**RCP8177.8X**						
	190.0			**RCP8190X**						
8	193.7		7 5/8	**RCP8193.7X**	320	270	265	6	120	240
	203.0		8	**RCP8203X**						
	219.1	G 8	8 5/8	**RCP8219.1X**						
	220.0			**RCP8220X**						
	219.1	G 8	8 5/8	**RCP9219.1X**						
	244.5			**RCP9244.5X**						
9	273.0	G 10	10 3/4	**RCP9273X**	470	410	395	20	162	324
	323.9	G 12	12 3/4	**RCP9323.9X**						
10	355.6	G 14		**RCP10355.6X**	630	530	534	20	182	364
	406.4	G 16		**RCP10406.4X**						

[1]) Only sizes 1–8
[2]) When assemblying solid rubber clamps, covering plates, he×agon screws and locking washers must be used.

Tube clamps series C (Heavy series) – Components

DIN 3015, part 2

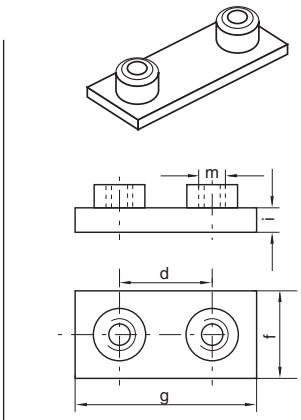

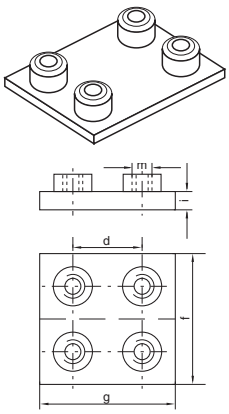

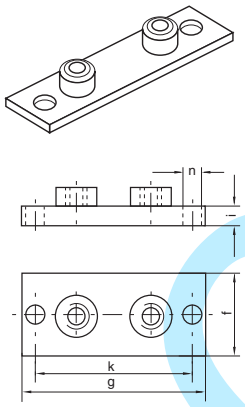

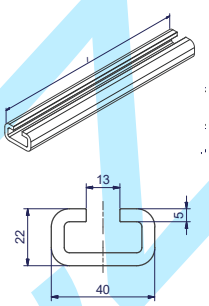

clamp size	weld plate						double weld plate						weld/screw plate					mounting rail	
	AP C... Order code	dimensions: d	f	g	i	m	**APD C...** Order code	dimensions: d	f	g	i	m	**APL C...** Order code	dimensions: g	f	i	k	n	**TS C...** Order code	length: l
1	**APC1...***	33	30	73	8	M10	**APDC1...***	33	60	73	8	M10	**APLC1...***	113	30	8	85	11	**TSC1X** **TSC1VERZX** **TSC14571X**	1 m
2	**APC2...***	45	30	84	8	M10	**APDC2...***	45	60	84	8	M10	**APLC2...***	125	30	8	97	11		
3	**APC3...***	60	30	100	8	M10	**APDC3...***	60	60	100	8	M10	**APLC3...***	140	30	8	112	11	**TSC2X** **TSC2VERZX** **TSC24571X**	2m
4	**APC4...***	90	45	140	10	M12	**APDC4...***	90	90	140	10	M12	**APLC4...***	190	45	10	160	14		
5	**APC5...***	122	60	180	10	M16	**APDC5...***	122	120	180	10	M16	**APLC5...***	240	60	10	205	18		
6	**APC6...***	168	80	225	15	M20	**APDC6...***	168	160	225	15	M20	**APLC6...***	310	80	15	270	22		
7	**APC7...***	205	90	270	15	M24	**APDC7...***	205	180	270	15	M24	**APLC7...***	370	90	15	320	26		
8	**APC8...***	265	120	340	25	M30	**APDC8...***	265	240	340	25	M30	**APLC8...***	450	120	25	390	33		
9	**APC9...***	395	160	520	30	M30	**APDC9...***	395	330	520	30	M30								
10	**APC10...***	534	180	680	30	M30	**APDC10...***	534	364	680	30	M30								

Complete programme range please refer to page T34.

*Please add the suffix below according to the surface/material required.

Order code suffixes		
Surface/material	**Suffix**	Example
Steel, phosphated	**X**	APC1X
Steel, zinc plated, Cr(VI)-free	**VZX**	APC1VZX
Stainless Steel 1.4571	**4571X**	APC14571X

KOVOX

T

Tube clamps series C (Heavy series) – Components

DIN 3015, part 2

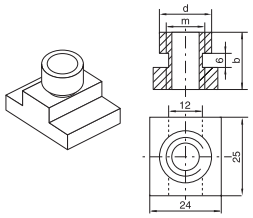

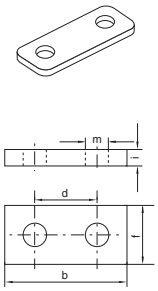

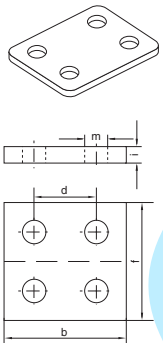

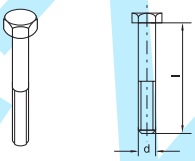

DIN 931/933

clamp size	rail nut				cover plate						double cover plate						hexagon head	
	TM C... Order code	dimensions: b	d	m	**DP C...** Order code	dimensions: b	d	f	i	m	**DPD C...** Order code	dimensions: b	d	f	i	m	**SS C...** Order code	dimensions: d x L
1	**TMC1VZX TMC14571X**	20	12.0	M10	**DPC1...***	55	33	30	8	11	**DPDC1...***	55	33	60	8	11	**SSC1...***	M 10×40
2					**DPC2...***	70	45	30	8	11	**DPDC2...***	70	45	60	8	11	**SSC2...***	M 10×60
3					**DPC3...***	85	60	30	8	11	**DPDC3...***	85	60	60	8	11	**SSC3...***	M 10×70
4	**TMC4VZX TMC44571X**	23	12.5	M12	**DPC4...***	115	90	45	10	14	**DPDC4...***	115	90	90	10	14	**SSC4...***	M 12×100
5	-	-			**DPC5...***	152	122	60	10	18	**DPDC5...***	152	122	120	10	18	**SSC5...***	M 16×130
6					**DPC6...***	205	168	80	15	22	**DPDC6...***	205	168	160	15	24	**SSC6...***	M 20×190
7					**DPC7...***	251	205	90	15	28	**DPDC7...***	250	205	180	15	28	**SSC7...***	M 24×220
8					**DPC8...***	320	265	120	25	35	**DPDC8...***	322	265	240	25	35	**SSC8...***	M 30×300
9					**DPC9...***	470	395	160	30	35	**DPDC9...***	466	395	330	30	35	**SSC9...***	M 30×450
10					**DPC10...***	630	534	180	30	35	**DPDC10...***	630	534	360	30	35	**SSC10...***	M 30×560

*Please add the suffix below according to the surface/material required.

Order code suffixes		
Surface/material	**Suffix**	Example
Steel, phosphated	**X**	DPC1X
Steel, zinc plated, Cr(VI)-free	**VZX**	DPC1VZX
Stainless Steel 1.4571	**4571X**	DPC14571X

Tube clamps series C (Heavy series) – Components

DIN 3015, part 2

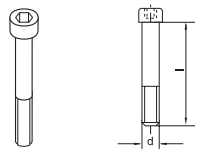

ISO 4762

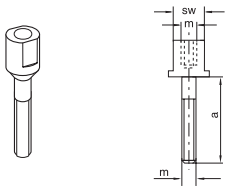

DIN 938

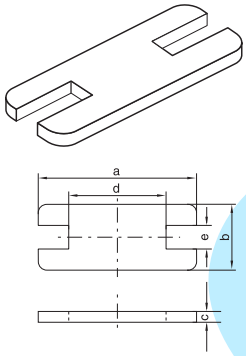

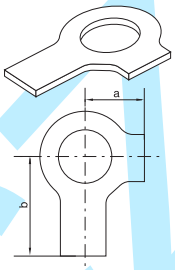

clamp size	socket head		stacking				locking plate[1]						locking washer[2]		
	IS C... Order code	dimensions: d × L	**AS C...** Order code	dimensions: a	m	SW	**SP C...** Order code	dimensions: a	b	c	d	e	**US C...** Order code	dimensions: a	b
1	**ISC1...***	M 10×45	**ASC1...***	25	M10	15	**SPC1...***	55	30	8	14	15.5			
2	**ISC2...***	M 10×60	**ASC2...***	40	M10	15	**SPC2...***	70	30	8	26	15.5	**USC1X[3]** **USC14571X**	13	22
3	**ISC3...***	M 10×70	**ASC3...***	50	M10	15	**SPC3...***	85	30	8	41	15.5			
4	**ISC4...***	M 12×100	**ASC4...***	80	M12	17	**SPC4...***	115	45	10	69	17.5	**USC4X[3]** **USC44571X**	15	28
5	**ISC5...***	M 16×130	**ASC5...***	110	M16	21	**SPC5...***	152	60	10	97	21.5	**USC5X[3]** **USC54571X**	18	32
6	**ISC6...***	M 20×190	**ASC6...***	155	M20	27	**SPC6...***	205	80	15	137	27.5	**USC6X[3]** **USC64571X**	21	36
7	**ISC7...***	M 24×220	**ASC7...***	180	M24	30	**SPC7...***	250	90	15	169	30.5	**USC7X[3]** **USC74571X**	25	42
8	**ISC8...***	M 30×300	**ASC8...***	250	M30	36	**SPC8...***	320	120	25	219	36.5	**USC8X[3]** **USC84571X**	32	52
9	**ISC9...***	M 30×450													
10	**ISC10...***	M 30×560													

[1]) The use of stacking screws necessitates the use of locking plates in the construction assembly!
[2]) When assemblying solid rubber clamps, covering plates, he×agon screws and locking washers must be used.
[3]) Material = Steel, zinc plated, Cr(VI)-free

*Please add the suffix below according to the surface/material required.

Order code suffixes		
Surface/material	**Suffix**	Example
Steel, phosphated	**X**	ISC1X
Steel, zinc plated, Cr(VI)-free	**VZX**	ISC1VZX
Stainless Steel 1.4571	**4571X**	ISC14571X

T

Tube clamps series C – Complete range

Order codes for clamp halves:

Material	Interior surface	Order code
Polypropylene	grooved	**RCP**
	smooth	**RCPG**[1)]
Polyamide	grooved	**RCN**
	smooth	**RCNG**[1)]
Rubber	grooved	**RCVR**[1)2)]
	smooth	**RCVG**[1)2)]
Aluminium	grooved	**RCA**

(Please exchange as required standard abbreviation RCP in column for "Order code")

For flame- or corrosion retardant materials, please refer to page T5.

The steel parts of kits 1 and 2 are phosphated.
Other compositions available on request.

2 clamp halves, weld plate, cover plate, hex. head bolt

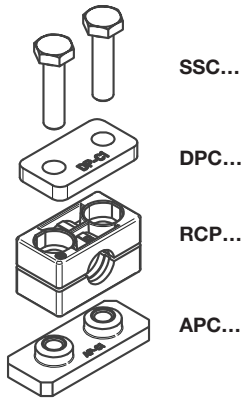

2 clamp halves, weld plate, cover plate, socket head bolt

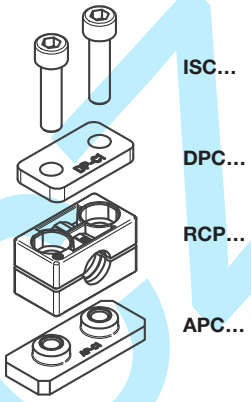

clamp size	Tube O.D. mm	Tube NB	Tube O.D.	Order code	Order code
1	6.0			**RCP1–106**	**RCP2–106**
	8.0		5/16	**RCP1–108**	**RCP2–108**
	9.5	G 1/8	3/8	**RCP1–109.5**	**RCP2–109.5**
	10.0			**RCP1–110**	**RCP2–110**
	12.0		1/2	**RCP1–112**	**RCP2–112**
	12.7	G 1/4		**RCP1–112.7**	**RCP2–112.7**
	13.5			**RCP1–113.5**	**RCP2–113.5**
	14.0			**RCP1–114**	**RCP2–114**
	15.0		5/8	**RCP1–115**	**RCP2–115**
	16.0	G 3/8		**RCP1–116**	**RCP2–116**
	17.2			**RCP1–117.2**	**RCP2–117.2**
	18.0			**RCP1–118**	**RCP2–118**
2	19.0		3/4	**RCP1–219**	**RCP2–219**
	20.0			**RCP1–220**	**RCP2–220**
	21.3	G 1/2		**RCP1–221.3**	**RCP2–221.3**
	22.0			**RCP1–222**	**RCP2–222**
	23.0			**RCP1–223**	**RCP2–223**
	25.0			**RCP1–225**	**RCP2–225**
	25.4		1	**RCP1–225.4**	**RCP2–225.4**
	26.9	G 3/4		**RCP1–226.9**	**RCP2–226.9**
	28.0			**RCP1–228**	**RCP2–228**
	30.0			**RCP1–230**	**RCP2–230**
3	30.0			**RCP1–330**	**RCP2–330**
	32.0		1 1/4	**RCP1–332**	**RCP2–332**
	33.7	G 1		**RCP1–333.7**	**RCP2–333.7**
	35.0			**RCP1–335**	**RCP2–335**
	38.0		1 1/2	**RCP1–338**	**RCP2–338**
	40.0			**RCP1–340**	**RCP2–340**
	42.0	G 1 1/4		**RCP1–342**	**RCP2–342**
4	38.0		1 1/2	**RCP1–438**	**RCP2–438**
	40.0			**RCP1–440**	**RCP2–440**
	42.0	G 1 1/4		**RCP1–442**	**RCP2–442**
	45.0			**RCP1–445**	**RCP2–445**
	48.3	G 1 1/2		**RCP1–448.3**	**RCP2–448.3**
	50.0			**RCP1–450**	**RCP2–450**
	51.0		2	**RCP1–451**	**RCP2–451**
	52.0			**RCP1–452**	**RCP2–452**
	55.0			**RCP1–455**	**RCP2–455**
	57.0		2 1/4	**RCP1–457**	**RCP2–457**
	60.3	G 2		**RCP1–460.3**	**RCP2–460.3**
	63.0		2 1/2	**RCP1–463**	**RCP2–463**
	65.0			**RCP1–465**	**RCP2–465**
	70.0			**RCP1–470**	**RCP2–470**

Continuation see next page …

Kovalent

Tube clamps series C – Complete range (Continued)

Order codes for clamp halves:

Material	Interior surface	Order code
Polypropylene	grooved	**RCP**
	smooth	**RCPG**[1)]
Polyamide	grooved	**RCN**
	smooth	**RCNG**[1)]
Rubber	grooved	**RCVR**[1)2)]
	smooth	**RCVG**[1)2)]
Aluminium	grooved	**RCA**

(Please exchange as required standard abbreviation RCP in column for "Order code")

For flame- or corrosion retardant materials, please refer to page T5.

The steel parts of kits 1 and 2 are phosphated.
Other compositions available on request.

2 clamp halves, weld plate, cover plate, hex. head bolt

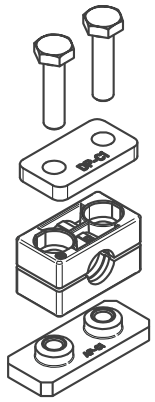

2 clamp halves, weld plate, cover plate, socket head bolt

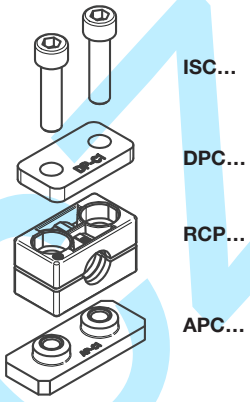

clamp size	Tube O.D. mm	Tube NB	Tube O.D.	Order code	Order code
5	65.0			**RCP1–565**	**RCP2–565**
	70.0			**RCP1–570**	**RCP2–570**
	73.0			**RCP1–573**	**RCP2–573**
	75.0			**RCP1–575**	**RCP2–575**
	76.1	G 2 1/2	3	**RCP1–576.1**	**RCP2–576.1**
	80.0			**RCP1–580**	**RCP2–580**
	82.5		3 1/4	**RCP1–582.5**	**RCP2–582.5**
	85.0			**RCP1–585**	**RCP2–585**
	88.0			**RCP1–588**	**RCP2–588**
	88.9	G 3	3 1/2	**RCP1–588.9**	**RCP2–588.9**
	90.0			**RCP1–590**	**RCP2–590**
6	90.0			**RCP1–690**	**RCP2–690**
	97.0			**RCP1–697**	**RCP2–697**
	100.0			**RCP1–6100**	**RCP2–6100**
	101.6	G 3 1/2	4	**RCP1–6101.6**	**RCP2–6101.6**
	108.0		4 1/4	**RCP1–6108**	**RCP2–6108**
	114.3	G 4	4 1/2	**RCP1–6114.3**	**RCP2–6114.3**
	115.0			**RCP1–6115**	**RCP2–6115**
	120.0			**RCP1-6120**	**RCP2–6120**
	127.0		5	**RCP1–6127**	**RCP2–6127**
7	127.0		5	**RCP1–7127**	**RCP2–7127**
	130.0			**RCP1–7130**	**RCP2–7130**
	133.0		5 1/4	**RCP1–7133**	**RCP2–7133**
	140.0	G 5	5 1/2	**RCP1–7140**	**RCP2–7140**
	150.0			**RCP1–7150**	**RCP2–7150**
	152.4	G 5 1/2	6	**RCP1–7152.4**	**RCP2–7152.4**
	159.0		6 1/4	**RCP1–7159**	**RCP2–7159**
	165.1	G 6	6 1/2	**RCP1–7165.1**	**RCP2–7165.1**
	168.3		6 5/8	**RCP1–7168.3**	**RCP2–7168.3**
8	168.3		6 5/8	**RCP1–8168.3**	**RCP2–8168.3**
	177.8		7	**RCP1–8177.8**	**RCP2–8177.8**
	190.0			**RCP1–8190**	**RCP2–8190**
	193.7		7 5/8	**RCP1–8193.7**	**RCP2–8193.7**
	203.0			**RCP1–8203**	**RCP2–8203**
	219.1	G 8	8 5/8	**RCP1–8219.1**	**RCP2–8219.1**
	220.0			**RCP1–8220**	**RCP2–8220**
9	219.1	G 8		**RCP1–9219.1**	**RCP2–9219.1**
	244.5			**RCP1–9244.5**	**RCP2–9244.5**
	273.0	G 10	10 3/4	**RCP1–9273**	**RCP2–9273**
	323.9	G 12	12 3/4	**RCP1–9323.9**	**RCP2–9323.9**
10	355.6	G 14		**RCP1–10355.6**	**RCP2–10355.6**
	406.4	G 16		**RCP1–10406.4**	**RCP2–10406.4**

Delivery in unassembled individual components.

[1]) Only sizes 1–8

[2]) When assemblying solid rubber clamps, covering plates, hexagon screws and locking washers must be used.

Tube clamps series C – Complete range

Order codes for clamp halves:

Material	Interior surface	Order code
Polypropylene	grooved	**RCP**
	smooth	**RCPG**[1)]
Polyamide	grooved	**RCN**
	smooth	**RCNG**[1)]
Rubber	grooved	**RCVR**[1)2)]
	smooth	**RCVG**[1)2)]
Aluminium	grooved	**RCA**

(Please exchange as required standard abbreviation RCP in column for "Order code")

For flame- or corrosion retardant materials, please refer to page T5.

The steel parts of kits 3, 4 and 5 have the following surfaces:
Bolts, cover plate, locking plate = phosphated
Rail nuts = Cr(VI)-free galvanized
Other compositions available on request.

2 clamp halves, rail nuts, cover plate, hex. head bolts

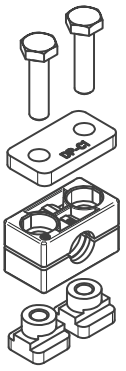

2 clamp halves, rail nuts, cover plate, socket head bolts

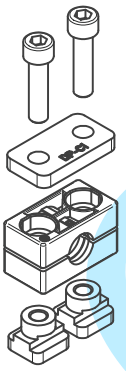

2 clamp halves, locking plate, stacking bolts

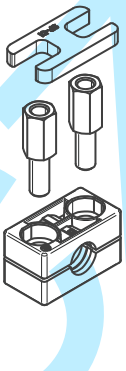

clamp size	Tube O.D. mm	Tube NB	Tube O.D.	Order code	Order code	Order code
1	6.0			**RCP3–106**	**RCP4–106**	**RCP5–106**
	8.0		5/16	**RCP3–108**	**RCP4–108**	**RCP5–108**
	9.5	G 1/8	3/8	**RCP3-109.5**	**RCP4-109.5**	**RCP5-109.5**
	10.0			**RCP3–110**	**RCP4–110**	**RCP5–110**
	12.0		1/2	**RCP3–112**	**RCP4–112**	**RCP5–112**
	12.7	G 1/4		**RCP3–112.7**	**RCP4–112.7**	**RCP5–112.7**
	13.5			**RCP3–113.5**	**RCP4–113.5**	**RCP5–113.5**
	14.0			**RCP3–114**	**RCP4–114**	**RCP5–114**
	15.0		5/8	**RCP3–115**	**RCP4–115**	**RCP5–115**
	16.0	G 3/8		**RCP3–116**	**RCP4–116**	**RCP5–116**
	17.2			**RCP3–117.2**	**RCP4–117.2**	**RCP5–117.2**
	18.0			**RCP3–118**	**RCP4–118**	**RCP5–118**
2	19.0		3/4	**RCP3–219**	**RCP4–219**	**RCP5–219**
	20.0			**RCP3–220**	**RCP4–220**	**RCP5–220**
	21.3	G 1/2		**RCP3–221.3**	**RCP4–221.3**	**RCP5–221.3**
	22.0			**RCP3–222**	**RCP4–222**	**RCP5–222**
	23.0			**RCP3–223**	**RCP4–223**	**RCP5–223**
	25.0			**RCP3–225**	**RCP4–225**	**RCP5–225**
	25.4		1	**RCP3-225.4**	**RCP4-225.4**	**RCP5-225.4**
	26.9	G 3/4		**RCP3–226.9**	**RCP4–226.9**	**RCP5–226.9**
	28.0			**RCP3–228**	**RCP4–228**	**RCP5–228**
	30.0			**RCP3–230**	**RCP4–230**	**RCP5–230**
3	30.0			**RCP3–330**	**RCP4–330**	**RCP5–330**
	32.0		1 1/4	**RCP3–332**	**RCP4–332**	**RCP5–332**
	33.7	G 1		**RCP3–333.7**	**RCP4–333.7**	**RCP5–333.7**
	35.0			**RCP3–335**	**RCP4–335**	**RCP5–335**
	38.0		1 1/2	**RCP3–338**	**RCP4–338**	**RCP5–338**
	40.0			**RCP3–340**	**RCP4–340**	**RCP5–340**
	42.0	G 1 1/4		**RCP3–342**	**RCP4–342**	**RCP5–342**
4	38.0		1 1/2	**RCP3–438**	**RCP4–438**	**RCP5–438**
	40.0			**RCP3–440**	**RCP4–440**	**RCP5–440**
	42.0	G 1 1/4		**RCP3–442**	**RCP4–442**	**RCP5–442**
	45.0			**RCP3–445**	**RCP4–445**	**RCP5–445**
	48.3	G 1 1/2		**RCP3–448.3**	**RCP4–448.3**	**RCP5–448.3**
	50.0			**RCP3–450**	**RCP4–450**	**RCP5–450**
	51.0		2	**RCP3–451**	**RCP4–451**	**RCP5–451**
	52.0			**RCP3–452**	**RCP4–452**	**RCP5–452**
	55.0			**RCP3–455**	**RCP4–455**	**RCP5–455**
	57.0		2 1/4	**RCP3–457**	**RCP4–457**	**RCP5–457**
	60.3	G 2		**RCP3–460.3**	**RCP4–460.3**	**RCP5–460.3**
	63.0		2 1/2	**RCP3–463**	**RCP4–463**	**RCP5–463**
	65.0			**RCP3–465**	**RCP4–465**	**RCP5–465**
	70.0			**RCP3–470**	**RCP4–470**	**RCP5–470**

Continuation see next page …

Tube clamps series C – Complete range (Continued)

Order codes for clamp halves:

Material	Interior surface	Order code
Polypropylene	grooved	**RCP**
	smooth	**RCPG**[1)]
Polyamide	grooved	**RCN**
	smooth	**RCNG**[1)]
Rubber	grooved	**RCVR**[1)2)]
	smooth	**RCVG**[1)2)]
Aluminium	grooved	**RCA**

(Please exchange as required standard abbreviation RCP in column for "Order code")

For flame- or corrosion retardant materials, please refer to page T5.

The steel parts of kits 5 are phosphated.
Other compositions available on request.

2 clamp halves, locking plate, stacking bolts

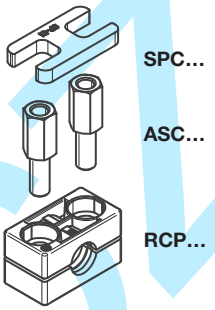

clamp size	Tube O.D. mm	Tube NB	Tube O.D.	Order code
5	65.0			**RCP5–565**
	70.0			**RCP5–570**
	73.0			**RCP5–573**
	75.0			**RCP5–575**
	76.1	G 2 1/2	3	**RCP5–576.1**
	80.0			**RCP5–580**
	82.5		3 1/4	**RCP5–582.5**
	85.0			**RCP5-585**
	88.0			**RCP5-588**
	88.9	G 3	3 1/2	**RCP5–588.9**
	90.0			**RCP5–590**
6	90.0			**RCP5–690**
	97.0			**RCP5–697**
	100.0			**RCP5–6100**
	101.6	G 3 1/2	4	**RCP5–6101.6**
	108.0		4 1/4	**RCP5–6108**
	114.3	G 4	4 1/2	**RCP5–6114.3**
	115.0			**RCP5-6115**
	120.0			**RCP5-6120**
	127.0		5	**RCP5–6127**
7	127.0		5	**RCP5–7127**
	130.0			**RCP5–7130**
	133.0		5 1/4	**RCP5–7133**
	140.0	G 5	5 1/2	**RCP5–7140**
	150.0			**RCP5–7150**
	152.4	G 5 1/2	6	**RCP5–7152.4**
	159.0		6 1/4	**RCP5–7159**
	165.1	G 6	6 1/2	**RCP5–7165.1**
	168.3		6 5/8	**RCP5–7168.3**
8	168.3		6 5/8	**RCP5–8168.3**
	177.8		7	**RCP5–8177.8**
	190.0			**RCP5-8190**
	193.7		7 5/8	**RCP5–8193.7**
	203.0			**RCP5–8203**
	219.1	G 8	8 5/8	**RCP5–8219.1**
	220.0			**RCP5–8220**

Delivery in unassembled individual components.

[1)] Only sizes 1–8

[2)] When assemblying solid rubber clamps, covering plates, hexagon screws and locking washers must be used.

kovaz.si

Multiclamp series A

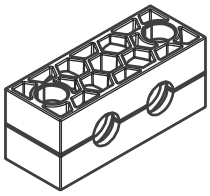

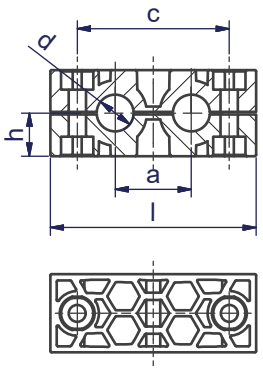

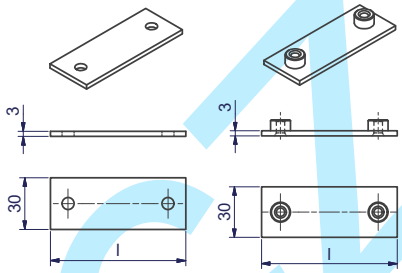

clamp size	Tube O.D. mm d	Number of tubes	Number of Fastening screws B	1 part 2 clamp halves RAPM Order code	2 clamp-halves RAPM-... a	c	h	l	cover plate Order code	length:	weld plate Order code	length:
1	6.0 6.4 8.0 9.5 10.0 12.0	2	2	**RAPM106B2X** **RAPM106.4B2X** **RAPM108B2X** **RAPM109.5B2X** **RAPM110B2X** **RAPM112B2X**	20	40	13.5	60.5	**DPM1B2...***	60.5	**APM1B2...***	62.5
2	10.0 12.0 12.7 13.5 14.0 15.0 16.0 17.2 18.0	2	2	**RAPM210B2X** **RAPM212B2X** **RAPM212.7B2X** **RAPM213.5B2X** **RAPM214B2X** **RAPM215B2X** **RAPM216B2X** **RAPM217.2B2X** **RAPM218B2X**	29	58	16.5	78.5	**DPM2B2...***	78.5	**APM2B2...***	80.5
3	15.0 16.0 17.2 18.0 19.0 20.0 21.3 22.0 23.0 25.0 25.4	2	2	**RAPM315B2X** **RAPM316B2X** **RAPM317.2B2X** **RAPM318B2X** **RAPM319B2X** **RAPM320B2X** **RAPM321.3B2X** **RAPM322B2X** **RAPM323B2X** **RAPM325B2X** **RAPM325.4B2X**	36	72	18.5	92.5	**DPM3B2...***	92.5	**APM3B2...***	94.5

Order codes for clamp halves:

Material	Interiour surface	Order code
Polypropylene	grooved	**RAPM**
	smooth	**RAPGM**
Polyamide	grooved	**RANM**
	smooth	**RANGM**
Rubber	smooth	**RAVGM**[1)]

(Please exchange as required standard abbreviation RAPM in column for “Order code”)

For flame- or corrosion retardant materials, please refer to page T5.

*Please add the suffix below according to the surface/material required.

Order code suffixes		
Surface/material	**Suffix**	Example
Steel, phosphated	**X**	DPM1B2X
Steel, zinc plated, Cr(VI)-free	**VZX**	DPM1B2VZX
Stainless Steel 1.4571	**4571X**	DPM1B24571X

Different diameter on request.

[1)] When assemblying solid rubber clamps, covering plates, hexagon screws and locking washers must be used.

Multiclamp series A

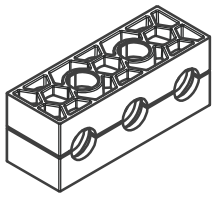

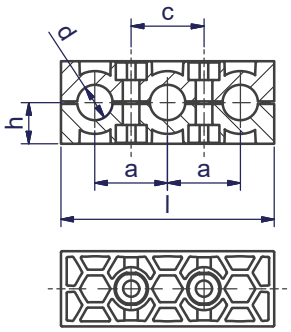

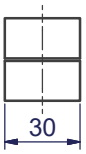

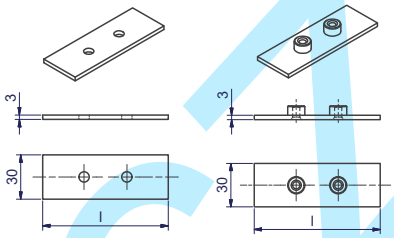

clamp size	Tube O.D. mm d	Number of tubes	Number of Fastening screws B	1 part 2 clamp halves RAPM Order code	2 clamp-halves RAPM-... a	c	h	l	cover plate Order code	length:	weld plate Order code	length:
1	6.0 6.4 8.0 9.5 10.0 12.0	3	2	**RAPM106B3X** **RAPM106.4B3X** **RAPM108B3X** **RAPM109.5B3X** **RAPM110B3X** **RAPM112B3X**	20	20	13.5	56	**DPM1B3...***	56	**APM1B3...***	58
2	10.0 12.0 12.7 13.5 14.0 15.0 16.0 17.2 18.0	3	2	**RAPM210B3X** **RAPM212B3X** **RAPM212.7B3X** **RAPM213.5B3X** **RAPM214B3X** **RAPM215B3X** **RAPM216B3X** **RAPM217.2B3X** **RAPM218B3X**	29	29	16.5	85	**DPM2B3...***	85	**APM2B3...***	87
3	15.0 16.0 17.2 18.0 19.0 20.0 21.3 22.0 23.0 25.0 25.4	3	2	**RAPM315B3X** **RAPM316B3X** **RAPM317.2B3X** **RAPM318B3X** **RAPM319B3X** **RAPM320B3X** **RAPM321.3B3X** **RAPM322B3X** **RAPM323B3X** **RAPM325B3X** **RAPM325.4B3X**	36	36	18.5	106	**DPM3B3...***	106	**APM3B3...***	108

Order codes for clamp halves:

Material	Interiour surface	Order code
Polypropylene	grooved	**RAPM**
	smooth	**RAPGM**
Polyamide	grooved	**RANM**
	smooth	**RANGM**
Rubber	smooth	**RAVGM**[1)]

(Please exchange as required standard abbreviation RAPM in column for “Order code”)

For flame- or corrosion retardant materials, please refer to page T5.

*Please add the suffix below according to the surface/material required.

Order code suffixes		
Surface/material	**Suffix**	Example
Steel, phosphated	**X**	DPM1B3X
Steel, zinc plated, Cr(VI)-free	**VZX**	DPM1B3VZX
Stainless Steel 1.4571	**4571X**	DPM1B34571X

Different diameter on request.

[1)] When assemblying solid rubber clamps, covering plates, hexagon screws and locking washers must be used.

T

Multiclamp series A

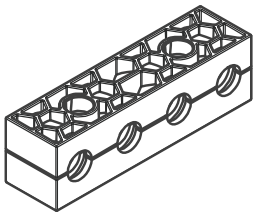

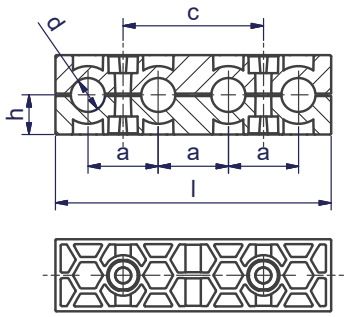

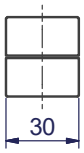

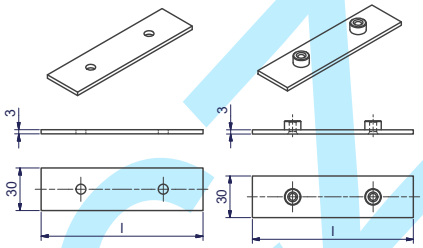

clamp size	Tube O.D. mm d	Number of tubes	Number of Fastening screws B	1 part 2 clamp halves RAPM Order code	2 clamp-halves RAPM-... a	c	h	l	cover plate Order code	length:	weld plate Order code	length:
1	6.0 6.4 8.0 9.5 10.0 12.0	4	2	**RAPM106B4X** **RAPM106.4B4X** **RAPM108B4X** **RAPM109.5B4X** **RAPM110B4X** **RAPM112B4X**	20	40	13.5	76	**DPM1B4...***	76	**APM1B4...***	78
2	10.0 12.0 12.7 13.5 14.0 15.0 16.0 17.2 18.0	4	2	**RAPM210B4X** **RAPM212B4X** **RAPM212.7B4X** **RAPM213.5B4X** **RAPM214B4X** **RAPM215B4X** **RAPM216B4X** **RAPM217.2B4X** **RAPM218B4X**	29	58	16.5	114	**DPM2B4...***	114	**APM2B4...***	116
3	15.0 16.0 17.2 18.0 19.0 20.0 21.3 22.0 23.0 25.0 25.4	4	2	**RAPM315B4X** **RAPM316B4X** **RAPM317.2B4X** **RAPM318B4X** **RAPM319B4X** **RAPM320B4X** **RAPM321.3B4X** **RAPM322B4X** **RAPM323B4X** **RAPM325B4X** **RAPM325.4B4X**	36	72	18.5	142	**DPM3B4...***	142	**APM3B4...***	144

Order codes for clamp halves:

Material	Interiour surface	Order code
Polypropylene	grooved	**RAPM**
	smooth	**RAPGM**
Polyamide	grooved	**RANM**
	smooth	**RANGM**
Rubber	smooth	**RAVGM[1)]**

(Please exchange as required standard abbreviation RAPM in column for “Order code”)

For flame- or corrosion retardant materials, please refer to page T5.

*Please add the suffix below according to the surface/material required.

Order code suffixes		
Surface/material	**Suffix**	Example
Steel, phosphated	**X**	DPM1B4X
Steel, zinc plated, Cr(VI)-free	**VZX**	DPM1B4VZX
Stainless Steel 1.4571	**4571X**	DPM1B44571X

Different diameter on request.

[1)] When assemblying solid rubber clamps, covering plates, hexagon screws and locking washers must be used.

Multiclamp series A

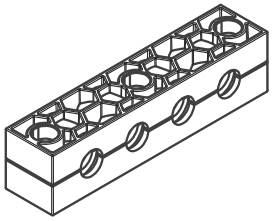

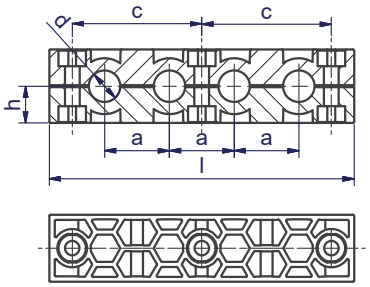

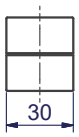

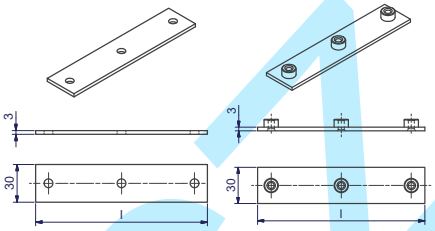

clamp size	Tube O.D. mm d	Number of tubes	Number of Fastening screws C	1 part 2 clamp halves RAPM Order code	2 clamp-halves RAPM-... a	c	h	l	cover plate Order code	length:	weld plate Order code	length:
1	6.0 6.4 8.0 9.5 10.0 12.0	4	3	**RAPM106C4X** **RAPM106.4C4X** **RAPM108C4X** **RAPM109.5C4X** **RAPM110C4X** **RAPM112C4X**	20	40	13.5	100.5	**DPM1C4...***	100.5	**APM1C4...***	102.5
2	10.0 12.0 12.7 13.5 14.0 15.0 16.0 17.2 18.0	4	3	**RAPM210C4X** **RAPM212C4X** **RAPM212.7C4X** **RAPM213.5C4X** **RAPM214C4X** **RAPM215C4X** **RAPM216C4X** **RAPM217.2C4X** **RAPM218C4X**	29	58	16.5	136.5	**DPM2C4...***	136.5	**APM2C4...***	138.5
3	15.0 16.0 17.2 18.0 19.0 20.0 21.3 22.0 23.0 25.0 25.4	4	3	**RAPM315C4X** **RAPM316C4X** **RAPM317.2C4X** **RAPM318C4X** **RAPM319C4X** **RAPM320C4X** **RAPM321.3C4X** **RAPM322C4X** **RAPM323C4X** **RAPM325C4X** **RAPM325.4C4X**	36	72	18.5	164.5	**DPM3C4...***	164.5	**APM3C4...***	166.5

Order codes for clamp halves:

Material	Interiour surface	Order code
Polypropylene	grooved	**RAPM**
	smooth	**RAPGM**
Polyamide	grooved	**RANM**
	smooth	**RANGM**
Rubber	smooth	**RAVGM**[1)]

(Please exchange as required standard abbreviation RAPM in column for "Order code")

For flame- or corrosion retardant materials, please refer to page T5.

*Please add the suffix below according to the surface/material required.

Order code suffixes		
Surface/material	**Suffix**	Example
Steel, phosphated	**X**	DPM1C4X
Steel, zinc plated, Cr(VI)-free	**VZX**	DPM1C4VZX
Stainless Steel 1.4571	**4571X**	DPM1C44571X

Different diameter on request.

[1)] When assemblying solid rubber clamps, covering plates, he×agon screws and locking washers must be used.

Multiclamp series A

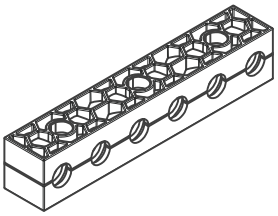

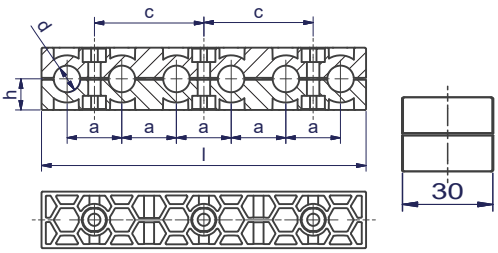

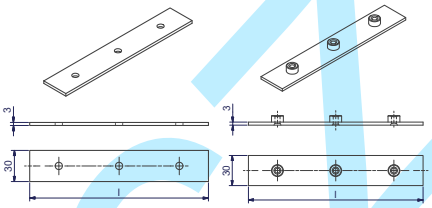

clamp size	Tube O.D. mm d	Number of tubes	Number of Fastening screws C	1 part 2 clamp halves RAPM Order code	2 clamp-halves RAPM-... a	c	h	l	cover plate Order code	length:	weld plate Order code	length:
1	6.0 6.4 8.0 9.5 10.0 12.0	6	3	**RAPM106C6X** **RAPM106.4C6X** **RAPM108C6X** **RAPM109.5C6X** **RAPM110C6X** **RAPM112C6X**	20	40	13.5	116	**DPM1C6...***	116	**APM1C6...***	118
2	10.0 12.0 12.7 13.5 14.0 15.0 16.0 17.2 18.0	6	3	**RAPM210C6X** **RAPM212C6X** **RAPM212.7C6X** **RAPM213.5C6X** **RAPM214C6X** **RAPM215C6X** **RAPM216C6X** **RAPM217.2C6X** **RAPM218C6X**	29	58	16.5	172	**DPM2C6...***	172	**APM2C6...***	174
3	15.0 16.0 17.2 18.0 19.0 20.0 21.3 22.0 23.0 25.0 25.4	6	3	**RAPM315C6X** **RAPM316C6X** **RAPM317.2C6X** **RAPM318C6X** **RAPM319C6X** **RAPM320C6X** **RAPM321.3C6X** **RAPM322C6X** **RAPM323C6X** **RAPM325C6X** **RAPM325.4C6X**	36	72	18.5	214	**DPM3C6...***	214	**APM3C6...***	216

Order codes for clamp halves:

Material	Interiour surface	Order code
Polypropylene	grooved	**RAPM**
	smooth	**RAPGM**
Polyamide	grooved	**RANM**
	smooth	**RANGM**
Rubber	smooth	**RAVGM**[1)]

(Please exchange as required standard abbreviation RAPM in column for “Order code”)

For flame- or corrosion retardant materials, please refer to page T5.

*Please add the suffix below according to the surface/material required.

Order code suffixes		
Surface/material	**Suffix**	Example
Steel, phosphated	**X**	DPM1C6X
Steel, zinc plated, Cr(VI)-free	**VZX**	DPM1C6VZX
Stainless Steel 1.4571	**4571X**	DPM1C64571X

Different diameter on request.

[1)] When assemblying solid rubber clamps, covering plates, he×agon screws and locking washers must be used.

Multiclamp series A

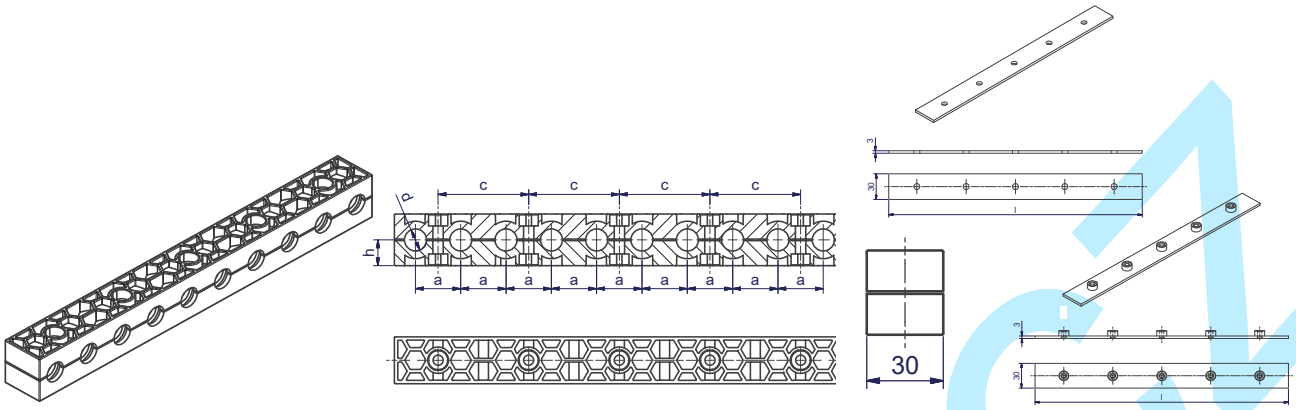

clamp size	Tube O.D. mm d	Number of tubes	Number of Fastening screws C	1 part 2 clamp halves RAPM Order code	2 clamp-halves RAPM-... a	c	h	l	cover plate Order code	length:	weld plate Order code	length:
1	6.0 6.4 8.0 9.5 10.0 12.0	10	5	**RAPM106E10X** **RAPM106.4E10X** **RAPM108E10X** **RAPM109.5E10X** **RAPM110E10X** **RAPM112E10X**	20	40	13.5	196	**DPM1E10...***	196	**APM1E10...***	198
2	10.0 12.0 12.7 13.5 14.0 15.0 16.0 17.2 18.0	10	5	**RAPM210E10X** **RAPM212E10X** **RAPM212.7E10X** **RAPM213.5E10X** **RAPM214E10X** **RAPM215E10X** **RAPM216E10X** **RAPM217.2E10X** **RAPM218E10X**	29	58	16.5	288	**DPM2E10...***	288	**APM2E10...***	300
3	15.0 16.0 17.2 18.0 19.0 20.0 21.3 22.0 23.0 25.0 25.4	10	5	**RAPM315E10X** **RAPM316E10X** **RAPM317.2E10X** **RAPM318E10X** **RAPM319E10X** **RAPM320E10X** **RAPM321.3E10X** **RAPM322E10X** **RAPM323E10X** **RAPM325E10X** **RAPM325.4E10X**	36	72	18.5	358	**DPM3E10...***	358	**APM3E10...***	360

Order codes for clamp halves:

Material	Interiour surface	Order code
Polypropylene	grooved	**RAPM**
	smooth	**RAPGM**
Polyamide	grooved	**RANM**
	smooth	**RANGM**
Rubber	smooth	**RAVGM**[1)]

(Please exchange as required standard abbreviation RAPM in column for “Order code”)

For flame- or corrosion retardant materials, please refer to page T5.

*Please add the suffix below according to the surface/material required.

Order code suffixes		
Surface/material	**Suffix**	Example
Steel, phosphated	**X**	DPM1E10X
Steel, zinc plated, Cr(VI)-free	**VZX**	DPM1E10VZX
Stainless Steel 1.4571	**4571X**	DPM1E104571X

Different diameter on request.

[1)] When assemblying solid rubber clamps, covering plates, he×agon screws and locking washers must be used.

T

Tube clamps series O

Order codes for clamps:

Material	Interiour surface	Order code
Polypropylene	smooth	**ROP**
Polyamide	smooth	**RON**

Packing standard 100 pieces.

Areas of Application:
- pneumatics
- automotive technology
- mechanical engineering
- measurement and control
- naval technologie

also suitable for cables and hoses.

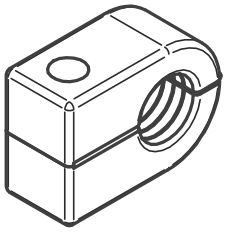

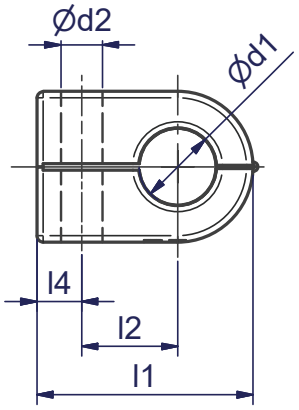

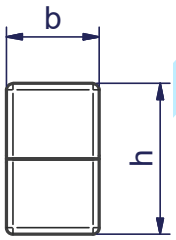

Clamp-size	Tube Ø d1 O.D. mm	Tube NB	Inch	Order code Polypropylene ROP	Order code Polyamide RON	l1	l2	l4	b	H	Ø d2
1	6.0 6.4 8.0		1/4	**ROP106X** **ROP106.4X** **ROP108X**	**RON106X** **RON106.4X** **RON108X**	23	9	7	14.5	13.5	6.5
2	8.0 9.5 10.0 12.0 12.7	G 1/8	3/8 1/2	**ROP208X** **ROP209.5X** **ROP210X** **ROP212X** **ROP212.7X**	**RON208X** **RON209.5X** **RON210X** **RON212X** **RON212.7X**	27	11	7	14.5	18.5	6.5
3	10.0 12.0 12.7 13.5 14.0 15.0 16.0	G 1/8 G 1/4 	 1/2 5/8	**ROP310X** **ROP312X** **ROP312.7X** **ROP313.5X** **ROP314X** **ROP315X** **ROP316X**	**RON310X** **RON312X** **RON312.7X** **RON313.5X** **RON314X** **RON315X** **RON316X**	34	15	7	14.5	23.5	6.5
4	14.0 15.0 16.0 17.2 18.0 19.0 20.0 21.3 22.0	 G 3/8 G 1/2 	 5/8 3/4 	**ROP414X** **ROP415X** **ROP416X** **ROP417.2X** **ROP418X** **ROP419X** **ROP420X** **ROP421.3X** **ROP422X**	**RON414X** **RON415X** **RON416X** **RON417.2X** **RON418X** **RON419X** **RON420X** **RON421.3X** **RON422X**	40	19	6	14.5	30.5	6.5

Double-Tube clamps series O

Order codes for clamps:

Material	Interiour surface	Order code
Polypropylene	smooth	**ROPD**
Polyamide	smooth	**ROND**

Different diameter on request.

Packing standard 100 pieces.

Areas of Application:
- pneumatics
- automotive technology
- mechanical engineering
- measurement and control
- machine tool industry

also suitable for cables and hoses.

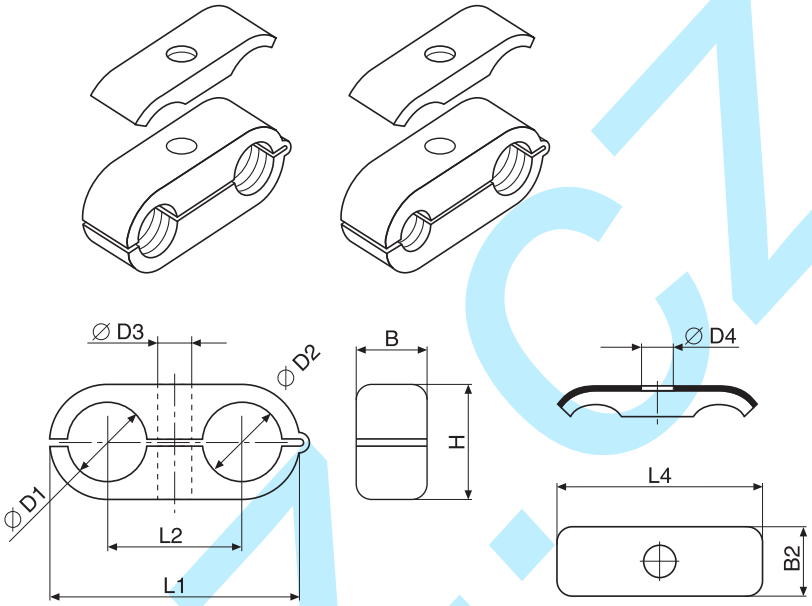

Clamp-size	Tube O.D. D1/D2 mm	Tube NB	Inch	Order code Polypropylene ROPD	Order code Polyamide ROND	Order code Cover plate DPO	L1	L2	B	H	Ø D3	L4	B2	Ø D4
1	6.0 6.4 8.0		1/4	**ROPD106X** **ROPD106.4X** **ROPD108X**	**ROND106X** **ROND106.4X** **ROND108X**	**DPO1X**[1] **DPO14571X**	32	18	14.5	13.5	6.5	29.0	16.3	6.5
2	8.0 9.5 10.0 12.0 12.7	1/8	3/8 1/2	**ROPD208X** **ROPD209.5X** **ROPD210X** **ROPD212X** **ROPD212.7X**	**ROND208X** **ROND209.5X** **ROND210X** **ROND212X** **ROND212.7X**	**DPO2X**[1] **DPO24571X**	41	22	14.5	18.5	6.5	40.0	16.3	6.5
3	10.0 12.0 12.7 13.5 14.0 15.0 16.0	1/8 1/4 	 1/2 5/8	**ROPD310X** **ROPD312X** **ROPD312.7X** **ROPD313.5X** **ROPD314X** **ROPD315X** **ROPD316X**	**ROND310X** **ROND312X** **ROND312.7X** **ROND313.5X** **ROND314X** **ROND315X** **ROND316X**	**DPO3X**[1] **DPO34571X**	54	30	14.5	23.5	6.5	50.5	16.5	6.5
4	14.0 15.0 16.0 17.2 18.0 19.0 20.0 21.3 22.0	 3/8 1/2 	 5/8 3/4 	**ROPD414X** **ROPD415X** **ROPD416X** **ROPD417.2X** **ROPD418X** **ROPD419X** **ROPD420X** **ROPD421.3X** **ROPD422X**	**ROND414X** **ROND415X** **ROND416X** **ROND417.2X** **ROND418X** **ROND419X** **ROND420X** **ROND421.3X** **ROND422X**	**DPO4X**[1] **DPO44571X**	69	38	14.5	30.5	6.5	63.0	16.5	6.5

[1]) Material = Steel, zinc plated, Cr(VI)-free

T

Hydraulic steel-clamps

Hydraulic steel-clamps

Order code **HSRS-∗**
W1: steel coating, Cr(VI)-free

∗ please add. Ø D

HSRS hydraulic steel-clamps are mainly used in the field of building machinery.

The support-block is welded to the machine body or another component either in upend or flat position. The tube-clamp is screwed on.

The robust construction of the clamp has an impact- and vibration-absorbing effect. The small dimension/height of the clamp allows hydraulic cables to be fitted later on – e. g. for installing additional equipment to building machinery.

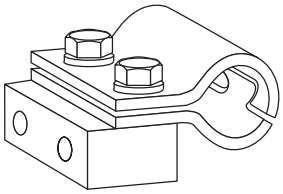

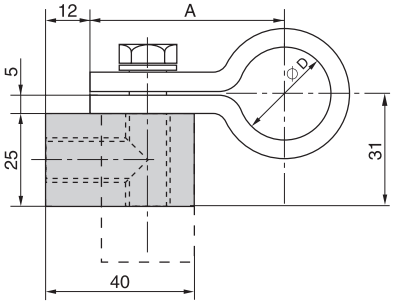

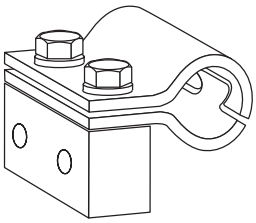

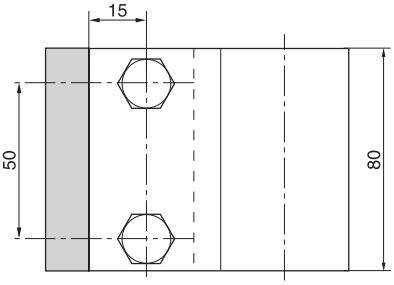

Order code		Dimensions	
Clamp incl. block	Clamp without block	Ø D	A
HSRS25	HSRS3-25CFX	25	52.5
HSRS30	HSRS3-30CFX	30	55.0
HSRS35	HSRS3-35CFX	35	57.5
HSRS38	HSRS3-38CFX	38	59.0
HSRS42	HSRS3-42CFX	42	61.0
HSRS48	HSRS3-48CFX	48	64.0
HSRS50	HSRS3-50CFX	50	65.0
HSRS60	HSRS3-60CFX	60	70.0

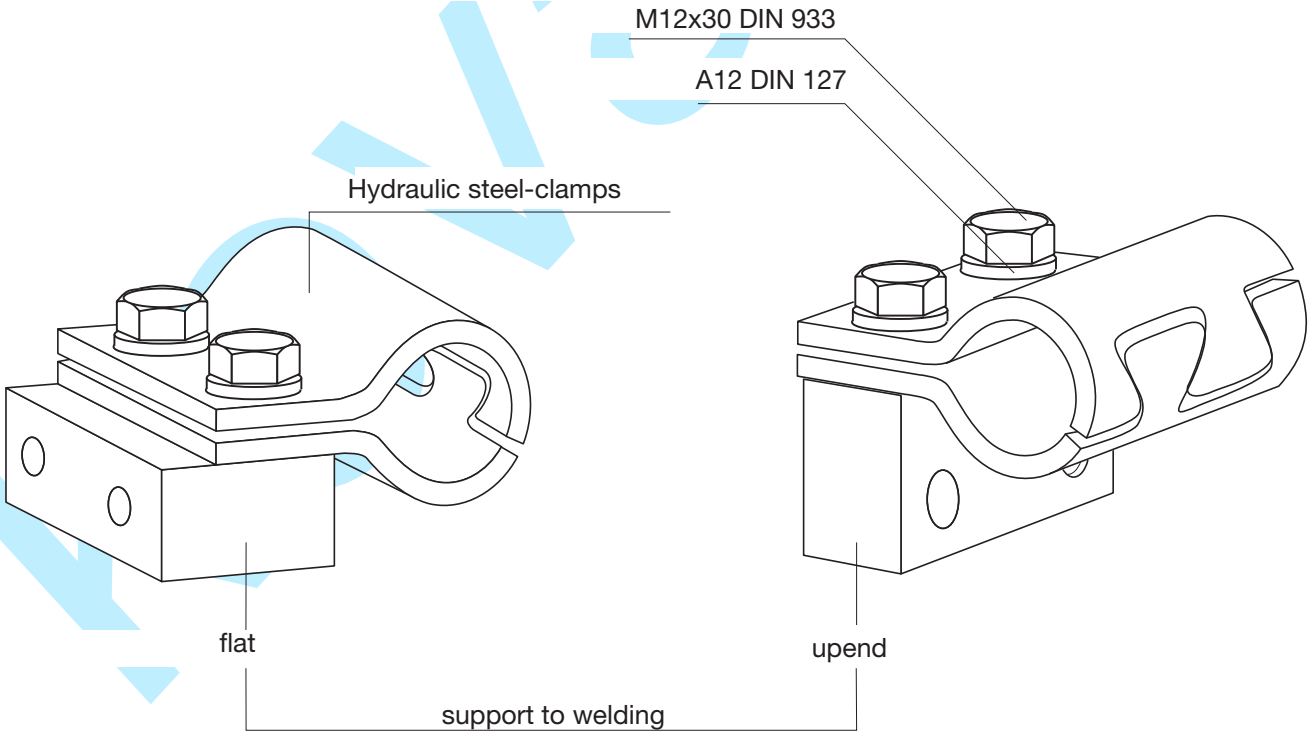

Hydraulic steel-clamps

Elastomere Inlay for HSRS

Order code **EE-∗**
∗ complete outside tube diameter

Hydraulic steel tube clamp HSRS also available with Elastomere inlay

The advantages:
- complete outside tube diameter
- Safe fastening method even for very sensitive tube and hoses lines
- Only one clamp for different tube diameters

Material:
Santoprene 64 Shore
- high oil and weathering resistance
- temperature stability between –40 °C and +120°C

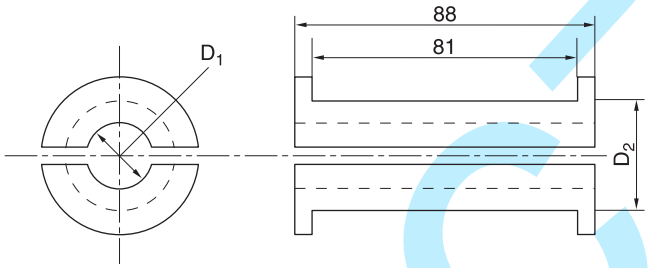

Order code Elastomere inlay	Nominal size D2	mm O.D. D1
EE12X	HSRS25	12
EE15X		15
EE20X	HSRS30	20
EE25X	HSRS35	25
EE30X	HSRS42	30
EE35X	HSRS50	35
EE38X		38
EE42X		42
EE47X	HSRS60	47
EE50X		50

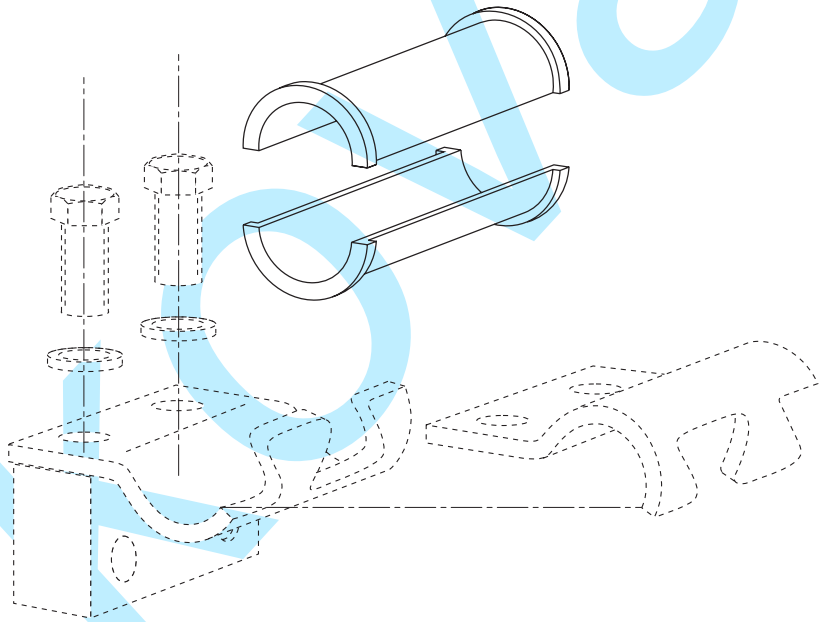

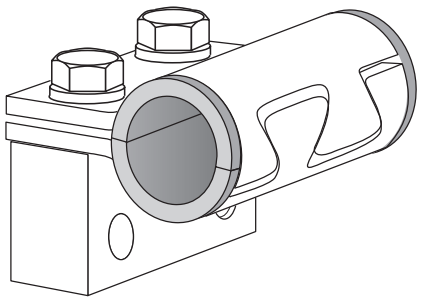

Novaz.cz

T

Tube Clamps with Elastomer Inlay Serie A

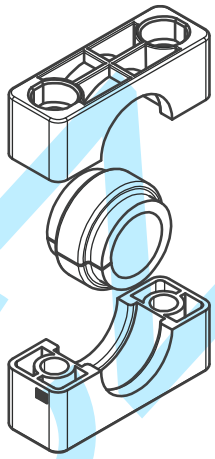

Clamp-halves

Order codes:

Polypropylene – **RAPE**
Polyamide 6 – **RANE**

If required, replace the standard indicator RAPE in the order code columns.

Elastomer Inlay

Order code:

TPE 73° Shore – **EE***

*complete with clamp size and outside tube diameter

Clamp size Serie A	Tube O.D. mm	Order code Clamp body	Clamp body with elastomer inlay	Elastomer inlay
4	6.0	RAPE4X	RAPE406X	EE206/406X
	8.0		RAPE408X	EE208/408X
	10.0		RAPE410X	EE210/410X
	12.0		RAPE412X	EE212/412X
	12.7		RAPE412.7X	EE212.7/412.7X
	14.0		RAPE414X	EE214/414X
	15.0		RAPE415X	EE215/415X
	16.0		RAPE416X	EE216/416X
	17.2		RAPE417.2X	EE217.2/417.2X
	18.0		RAPE418X	EE218/418X
	19.0		RAPE419X	EE219/419X
5	20.0	RAPE5X	RAPE520X	EE520X
	22.0		RAPE522X	EE522X
	25.0		RAPE525X	EE525X
	28.0		RAPE528X	EE528X
	30.0		RAPE530X	EE530X
6	20.0	RAPE6X	RAPE620X	EE320/620X
	21.3		RAPE621.3X	EE321.3/621.3X
	22.0		RAPE622X	EE322/622X
	23.0		RAPE623X	EE323/623X
	25.0		RAPE625X	EE325/625X
	26.9		RAPE626.9X	EE326.9/626.9X
	28.0		RAPE628X	EE328/628X
	30.0		RAPE630X	EE330/630X
	32.0		RAPE632X	EE332/632X
	35.0		RAPE635X	EE635X
	38.0		RAPE638X	EE638X
	42.0		RAPE642X	EE642X
	45.0		RAPE645X	EE645X

Attention! For clamps with elastomer inlay, the relation of diameter and size is not identical with the profile design or smooth design.

Kovai

Tube Clamps with Elastomer Inlay Serie C

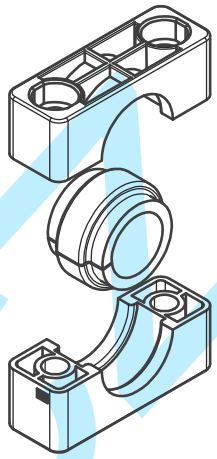

Clamp-halves

Order codes:

Polypropylene – **RCPE**
Polyamide 6 – **RCNE**

If required, replace the standard indicator RCPE in the order code columns.

Elastomer Inlay

Order code:

TPE 73° Shore – **EE***

*complete with clamp size and outside tube diameter

Clamp size Serie C	Tube O.D. mm	Order code Clamp body	Clamp body with elastomer inlay	Elastomer inlay
2	6.0	RCPE2X	**RCPE206X**	**EE206/406X**
	8.0		**RCPE208X**	**EE208/408X**
	10.0		**RCPE210X**	**EE210/410X**
	12.0		**RCPE212X**	**EE212/412X**
	12.7		**RCPE212.7X**	**EE212.7/412.7X**
	14.0		**RCPE214X**	**EE214/414X**
	15.0		**RCPE215X**	**EE215/415X**
	16.0		**RCPE216X**	**EE216/416X**
	17.2		**RCPE217.2X**	**EE217.2/417.2X**
	18.0		**RCPE218X**	**EE218/418X**
	19.0		**RCPE219X**	**EE219/419X**
3	20.0	RCPE3X	**RCPE320X**	**EE320/620X**
	21.3		**RCPE321.3X**	**EE321.3/621.3X**
	22.0		**RCPE322X**	**EE322/622X**
	23.0		**RCPE323X**	**EE323/623X**
	25.0		**RCPE325X**	**EE325/625X**
	26.9		**RCPE326.9X**	**EE326.9/626.9X**
	28.0		**RCPE328X**	**EE328/628X**
	30.0		**RCPE330X**	**EE330/630X**
	32.0		**RCPE332X**	**EE332/632X**
4	32.0	RCPE4X	**RCPE432X**	**EE432X**
	33.7		**RCPE433.7X**	**EE433.7X**
	35.0		**RCPE435X**	**EE435X**
	38.0		**RCPE438X**	**EE438X**
	40.0		**RCPE440X**	**EE440X**
	42.0		**RCPE442X**	**EE442X**
	45.5		**RCPE445.5X**	**EE445.5X**
	48.0		**RCPE448X**	**EE448X**
	51.0		**RCPE451X**	**EE451X**
	53.4		**RCPE453.4**	**EE453.4X**
	56.4		**RCPE456.4X**	**EE456.4X**
	60.3		**RCPE460.3X**	**EE460.3X**
5	57.0	RCPE5X	**RCPE557X**	**EE557X**
	60.3		**RCPE560.3X**	**EE560.3X**
	63.5		**RCPE563.5X**	**EE563.5X**
	65.0		**RCPE565X**	**EE565X**
	70.0		**RCPE570X**	**EE570X**
	73.0		**RCPE573X**	**EE573X**
	76.1		**RCPE576.1X**	**EE576.1X**

Attention! For clamps with elastomer inlay, the relation of diameter and size is not identical with the profile design or smooth design.

Tube Clamps with Elastomer Inlay Serie C

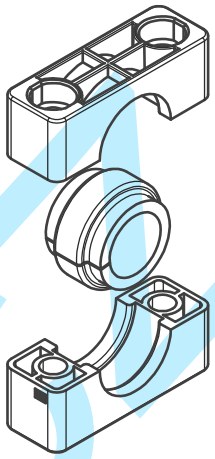

Clamp-halves

Order codes:

Polypropylene – **RCPE**
Polyamide 6 – **RCNE**

If required, replace the standard indicator RCPE in the order code columns.

Elastomer Inlay

Order code:

TPE 73° Shore – **EE***

*complete with clamp size and outside tube diameter

Clamp size Serie C	Tube O.D. mm	Order code Clamp body	Clamp body with elastomer inlay	Elastomer inlay
6	80.0	**RCPE6X**	**RCPE680X**	**EE680X**
	82.5		**RCPE682.5X**	**EE682.5X**
	88.9		**RCPE688.9X**	**EE688.9X**
	100.0		**RCPE6100X**	**EE6100X**
	101.6		**RCPE6101.6X**	**EE6101.6X**
7	101.6	**RCPE7X**	**RCPE7101.6X**	**EE7101.6X**
	108.0		**RCPE7108X**	**EE7108X**
	114.3		**RCPE7114.3X**	**EE7114.3X**
	127.0		**RCPE7127X**	**EE7127X**
	133.0		**RCPE7133X**	**EE7133X**

Attention! For clamps with elastomer inlay, the relation of diameter and size is not identical with the profile design or smooth design.

kova-i.cz

Fixed Adaptor

Compatibility with channel rails

Hilti (Channel system MQ for medium load)	Halfen (Medium duty channel system)	Unistrut®
MQ-21, MQ-21U, MQ-21D	HM 41/22, HL 41/22, HM 41/22 D	P1000, P1000T, P1001, P1001T
MQ-31	HZM 41/22, HZL 41/22, HZM 41/22 D	P2000, P2000T
MQ-41, MQ-41U, MQ-41D	HM 41/41, HL 41/41, HM 41/41 D	P3300, P3300T10, P3301, P3301T10
MQ-52, MQ-52-72D	HZM 41/41, HZL 41/41, HZM 41/41 D	P4000, P4000T10
MQ-72, MQ-72U	HM 41/62, HL 41/62, HM 41/62 D	P5000T, P5001T, P5500T, P5501T
	HM 41/83, HL 41/83	

Please contact us to check compatibility with additional types of channel rails.

Fixed Adaptor for Series A

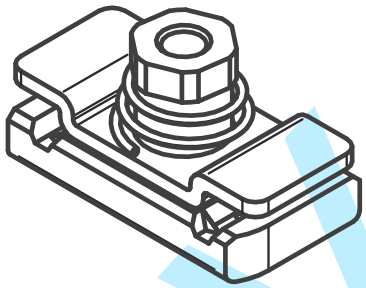

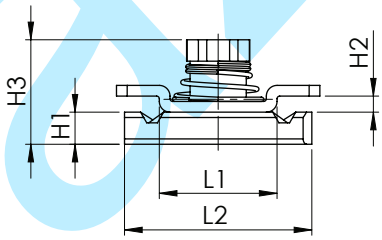

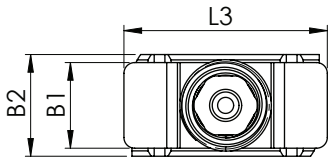

clamp size	Fixed adaptor **BAA/BAB** Order code	dimensions: L1	L2	L3	B1	B2	H1	H2	H3	d6
1	**BAA/BAB1VZX** **BAA/BAB14571X**	22	35	38	16	19	6	3	19.5	M6
2										
3										
4										
5										
6										
7										
8										

T

Fixed Adaptor for Series B

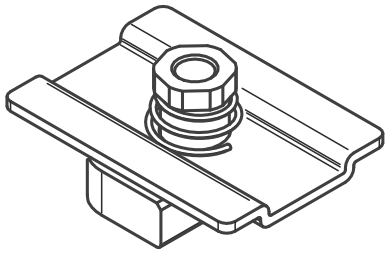

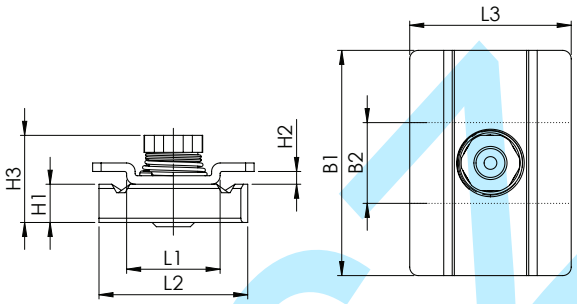

clamp size	Fixed adaptor **BAB** Order code	dimensions: L1	L2	L3	B1	B2	H1	H2	H3	d6
1	**BAA/BAB1VZX** **BAA/BAB14571X**	22	35	38	16	19	6	3	19.5	M6
2	**BAB2VZX** **BAB24571X**				53		9		23.5	M8
3										
4	**BAB4VZX** **BAB44571X**				80					
5										

Fixed Adaptor for Series C

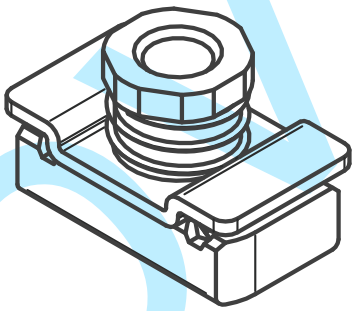

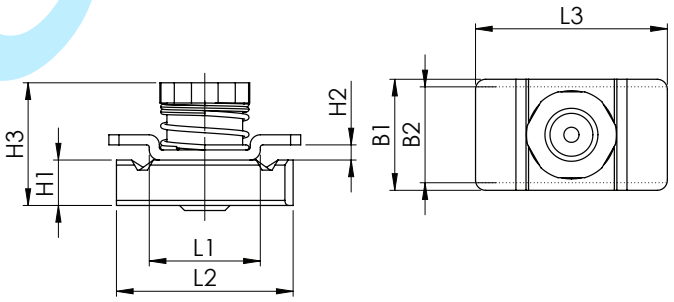

clamp size	Fixed adaptor **BAC** Order code	dimensions: L1	L2	L3	B1	B2	H1	H2	H3	d6
1	**BAC1VZX** **BAC14571X**	22	35	38	22	19	9	3	24.3	M10
2										
3										
4	**BAC4VZX** **BAC44571X**			45	25				25.8	M12

Recommended screw lengths when using fixed adaptor for series C

clamp size	Heaxgon head screw (with cover plate)	Hexagon socket head screw (without cover plate)	Stacking bolt
1	M10 x 40	M10 x 20*	M10 x 20*
2	M10 x 55*	M10 x 35*	M10 x 35*
3	M10 x 65*	M10 x 50*	M10 x 50*
4	M12 x 100	M12 x 75*	M12 x 75*

*For screws with special length (different from catalogue) price on request.

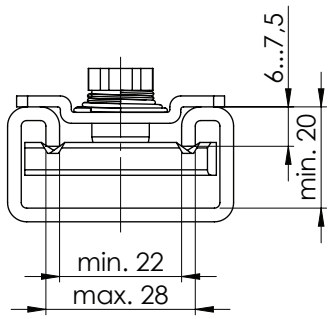

kovaz.cz

T

Railnut with loss protection

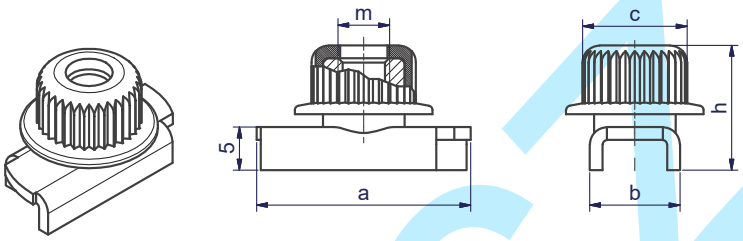

Rail nut light series **TMA/B1** Order code	Dimensions: a	b	c	m	h
TMA/TMB1WLPVZX	24.9	10.5	12	M6	14.5
TMA/TMB1WLP71X	24.9	10.5	12	M6	14.5

The big flange prevents that the railnut falls into the rail during installation and has a vibration and sound insulating function.
The rubbercap has an integrated screw locking device. Fast and easy to install, easy to adjust, especially for vertical installations.

Advantages:
- 40% time savings during installation
- Fast and easy to install
- Vibration and sound insulating function
- Especially for vertical installations

kovaz.cz

Custom Products

What are Custom Products?

Parker – supplier of your wishes – your special is our standard!

Your idea is our Know-How!

Profit of the advantages of our Custom Products:

- Slogans like “single source“ or “vendor-reduction“ are getting more and more important in industry.
- worldwide availibility
- Parker TFDE Custom Products is able to offer almost every type of connector, which is not to be found in our catalogues or price-lists.

Following examples could be a suggestion, how your problems could be solved in the future.

Jump sizes

One connector can replace several combinations.

- to shorten assembly-time
- to reduce possible leaks and their costs
- to reduce stock

Extra-long connectors

to avoid long tubes
or adapter-combinations

Unconventional configuration of ends

tube and port end

eg: to connect metric and inch tube …

Restricted orifice

orifice × 0,3 mm

(technical clarification about length of reduced bore in accordance to material necessary)

kovaz.ru

For your notes

Dom Technologiz
kovaz.cz

Industrial Tube Fittings Europe – Alphanumerical index

Order code	Page
0107	O46
0207	O49
0507	O51
1004	H32
2107	O47
210A	H32
2207	O50
226B	H51
226Z	H51
2507	O52
3107	O48
3507	O53
AKL	H7
AOE4G	O18
AOEG	O18
AOEL6	J18
AP	N70
AS	M3
AS	N35
ASK	M5
ASL	N37
ASR	N34
AV 6/42	H50
BAV 6/12	H51
BBMTX	K22
BFG	N75
BFGL	N78
BFW	N76
BFW3	N77
BFW3-G	N85
BFW-G	N80
BFW-GI	N81
BFWL	N79
BFW-S	N82
BL	J5
BML	J5
BMTX	K6
BTX	K5
BU	L5
BUZ	I116
BUZM	I117
BV 20/25	H53
BV 6/18	H52
C3MX	K53
C3P4	O57
C3T4	O55
C4OMLO	J41
C4OMX	K48
C5BU	L12
C5OMLO	J39
C5OMX	K46
C6BU	L8
C6MK4	O31
C6MLO	J19
C6MX	K18
C87OMLO	J38
C87OMX	K45
C8OMLO	J42
C8OMX	K49
CBU	L12
CC5OLO	J40
CC5OX	K47
CCCTX	K52
CCTX	K51
CD45	O10
CDM	O9
CLO	J43
CMTX	K50
CPM	N69
CR	O5
D	I15
DA	I34
DD45	O14
DD	O14
DG 101	Q6
DG 102-M	Q8
DG 102-R	Q7
DG 103	Q9
DG 104-M	Q11
DG 104-R	Q10
DG 105	Q12
DG 106-M	Q14
DG 106-R	Q13
DG 107	Q15
DG 108	Q16
DG 208	Q17
DKA	I128
DKI	I125
DMTX	K75
DOZ	I121
DPR	I16
DV	P60
DVGE-M	Q19
DVGE-R	Q18
DVWE-M	Q21
DVWE-R	Q20
E	I120
E6MK4	O35
EBU	L6
ED	I122
EGE-M-ED	I60
EGE-NPT	I64
EGEO	I59
EGE-R-ED	I61
EL	I30
ELA/ELAE	P64/65
EL-M-ED	I71
EL-R-ED	I72
EMA1	R4
EMA3	R8
EMK4	O28
EMLO	J10
EMTX	K10
EO2-FORM F3	H24
EO2-FORM PRO22	H24
EO2-FORM SET	I12
EO-KARRYFORM	H25
EO-KARRYMAT	H11
EOMAT ECO	H13
EOMAT PRO	H21
EOMAT UNI	H15
EO-NIROMONT	H49
ES	N39
ESL	N41
ESV	M6
ET	I29
ET-M-ED	I69
ET-R-ED	I70
EV	I28
EVGE-M-ED	I62
EVGE-R-ED	I63
EVL	I33
EVL-M	I77
EVL-R	I78
EV-M-ED	I67
EV-R-ED	I68
EVT	I32
EVT-M	I75
EVT-R	I76
EVW	I31
EVW-M	I73
EVW-R	I74
EW	I27
EW-M-ED	I65
EW-R-ED	I66
F3HG5	O23
F3MK4	O38
F3P4	O57
F3T4	O54
F3MX	K36

Kovaz.cz

Industrial Tube Fittings Europe – Alphanumerical index

Order code	Page	Order code	Page	Order code	Page
F42EDMLO	J30	FUS	N17	HP46	O56
F42EDMX	K30	FUSF	N20	HP5ON	O22
F4OHG5	O24	FUSM	N18	HPBA	J71
F4OMX	K32	G	I18	HPM	O16
F5BU	L10	G3P4	O59	HVM-B	H9
F5OG	O17	G4MK4	O37	I-TL	P20
F5OG5	O19	G4MLOSMO	J57	J6MK4	O36
F5OHAO	O20	G4MX	K72	JBU	L7
F5OMLO	J27	G4MXMO	K79	JMK4	O28
F5OMX	K27	G5G5JG5	O20	JMLO	J11
F63P4	O58	G63P4	O59	JMTX	K11
F63MX	K44	G6X	K78	JX6	K25
F642EDML	J36	G87MLO	J56	K	I24
F642EDMX	K39	GAI-M	I104	K6OO4MX	K84
F64OMX	K40	GAI-NPT	I106	K6PP4MX	K85
F65OL	J35	GAI-R	I105	KARRYFLARE	H34
F65OMX	K38	GBU	L13	KD	I127
F682EDML	J37	GE-M	I54	KDS	I126
F682EDMX	K41	GE-M (KEG)	I55	KH (71)	P41
F687OML	J34	GE-M-ED	I48	KH (S)	P40
F687OMX	K37	GE-NPT	I57	KH 3/2 (71)	P47
F68OMX	K42	GEO	I47	KH 3/2 (S)	P46
F6MK4	O30	GE-R	I51	KH 3/2 BSPP (71)	P49
F6MX	K43	GE-R (KEG)	I53	KH 3/2 BSPP (S)	P48
F82EDMLO	J32	GE-R-ED	I49	KH 3/2 NPT (S)	P50
F82EDMX	K33	GE-UNF/UN	I56	KH-A (S)	P53
F87OMLO	J26	GFS	N21	KH BSPP (71)	P43
F87OMX	K26	GFS-G	N25	KH BSPP (S)	P42
F8OHG5	O25	GFS-N	N27	KH-B1V-S	P52
F8OMX	K34	GG	O13	KHBLOCK	P55
FBU	L11	GG44M	O41	KHBLOCK 3/2	P56
FF33M	O44	GHP	H19	KHLOCKING	P51
FF42EDMLO	J31	GHP PRO	H23	KH-NPT (71)	P45
FF42EDMX	K31	GM	I118	KH-NPT (S)	P44
FF5OMLO	J28	GMA1	R5	KH-T (S)	P54
FF5OMX	K29	GMA3	R9	KLO	J12
FFFM	O6	GMTX	K73	KMMOO	O15
FF	O4	GR	I19	KONU	H19
FGM	O8	GZ	I44	KOR	I39
FHS	N16	GZR	I45	KTX	K12
FHSF	N19	H6MK4	O34	L(O)EMQ	N29
FLO	J33	HBU	L6	L(O)HQ	N28
FM	I10	HHP	O16	L(O)VQ	N30
FMK4	O40	HL6	J25	LD	P61
FMTX	K35	HMK4	O26	LEE	I80
FNLBA	J69	HMLO	J9	LE-M	I100
FNMK4	O39	HP4	O56	LE-M (KEG)	I103
FNML	J63	HMTX	K9	LE-R	I101
FNMTX	K86	HMX6	K24	LE-R (KEG)	I102
FNU	L13	HP3M	O45	LOHB3	J62

Howay.GI

Industrial Tube Fittings Europe – Alphanumerical index

Order code	Page
LOHL6	J24
LOHMX6	J67
LOHMX6	K90
LOHU86	J68
LUBSS	H49
M	I14
MAV	I109
MAVE	I110
MAV-MA1	R7
MAV-MA3	R11
MAVMD…MA3	R11
MMO	O15
MMO444M	O42
MMS	O12
MOK	H19
MOKEO2	H19
MOKEO2PRO	H23
MOKPRO	H23
MOKPRORW	H23
MRO	O11
MTX	K77
OR	I123
OTX	K76
P5ONBA	J71
P5ONM	O21
PAFG-90G	N52
PAFG-90L	N56
PAFG-90M	N50
PAFG-90X	N54
PAFG-G	N51
PAFG-L	N55
PAFG-X	N53
PAFS-90B	N59
PAFS-90S	N63
PAFS-B	N57
PAFSF-G	N44
PAFSF-S	N62
PAFS-S	N60
PAGL-(G/M)	N73
PARFLANGE® 1025	H39
PARFLANGE® 50	H41
PARFLANGE® 50 BASIC	H42
PARFLANGE® 50 PRO	H43
PARFLARE ECO	H35
PAR-LOK	H54
PCCFF	N68
PCFF	N67
PCFF-G	N43
PCFF-N	N47
PDFS-B	N65
PDFS-G	N64
PDFS-S	N66
PDSF-B	N92
PEFF-G	N45
PEFF-N	N48
PF	N83
PFB	N84
PFE	N84
PFF-..S/L	N49
PFF-G	N42
PFF-N	N46
PFL	N83
PGFS-B	N58
PGFS-S	N61
PMQ	N71, N72
PNLOBA	J70
PNMK4	O29
PNMLO	J64
PNMTX	K87
PNU	L14
PORTBOARD A	H59
PORTBOARD B	H59
PRF	N74
PSFA-B	N89
PSF-B	N91
PSFC	N88
PSFP	N90
PSR	I15
PTR34M	O43
PTRM	O7
PWDA	N87
PWDS-G	N86
R3MX	K71
R4OMLO	J54
R4OMX	K68
R5OMLO	J53
R5OMX	K67
R6BU	L9
R6MK4	O32
R6MLO	J22
R6MX	K21
R6O4MX	K82
R6P4MLO	J61
R6P4MX	K83
R87OMLO	J52
R87OMX	K66
R8OMLO	J55
R8OMX	K69
RED	I35
RHD	P13
RHDI	P18
RHDMLOS	P22
RHDMTXS	P29
RHV42EDMLOS	P23
RHV42EDMXS	P30
RHV5OMLOS	P25
RHV5OMXS	P32
RHV82EDMLOS	P27
RHV82EDMXS	P34
RHV-M-ED	P16
RHV-R-ED	P14
RHZ42EDMLOS	P24
RHZ42EDMXS	P31
RHZ5OMLOS	P26
RHZ5OMXS	P33
RHZ82EDMLOS	P28
RHZ82EDMXS	P35
RHZ-M-ED	P17
RHZ-R-ED	P15
RI	I108
RI-ED	I107
RMTX	K70
ROV	I111
RRS	O5
RVP	P19
S	I17
S3MX	K65
S4OMLO	J50
S4OMX	K62
S5OMLO	J49
S5OMX	K61
S6BU	L8
S6MK4	O33
S6MLO	J21
S6MX	K20
S87OMLO	J48
S87OMX	K60
S8OMLO	J51
S8OMX	K63
SBR	J75
SKA	M7
SKA-ORB	M10
SKAR	M8
SKA-RB	M11
SMA1	R7
SMA3	R11
SMTX	K64
SV	I25
SWVE	I89
T	I21

Invalid

Industrial Tube Fittings Europe – Alphanumerical index

Order code	Page
TEE	I80
TE-M	I96
TE-M (KEG)	I99
TE-R	I97
TE-R (KEG)	I98
TFDE-SAMPLECASE	H60
TH-M	I86
TH-M-KDS	I85
TH-R	I88
TH-R-KDS	I87
TL	J7
TPL	J6
TR	I22
TRBU	L9
TRMLO	J23
TRMTX	K23
TT4ML	J58
TT4MX	K80
TT8ML	J59
TTP4ML	J60
TTP4MX	K81
TU	L5
TW3L	J72
TX	K7
V3MX	K59
V3P4	O58
V3T4	O55
V4OMLO	J46
V4OMX	K56
V5OMLO	J45
V5OMX	K55
V6LO	J20
V6MX	K19
V87OMLO	J44
V87OMX	K54
V8OMLO	J47
V8OMX	K57
VDHA	P62
VEE	I80
VH	I119
VKA	I114
VKA1	R6
VKA3	R10
VKAM	I115
VMTX	K58
VOMO	H5
VSTI M/R-ED	I113
VSTI M-OR	I112
W	I20
WAS	M4, N38
WBU	L7
WEE	I80
WEE-R	I79
WE-M	I93
WE-M(KEG)	I92
WEMLO	J14
WEMTX	K14
WE-NPT	I91
WE-R	I94
WE-R (KEG)	I95
WF5OLO	J29
WFS	N23
WFS-G	N26
WGMTX	K74
WH-M	I82
WH-M-KDS	I81
WH-R	I84
WH-R-KDS	I83
WJJLO	J17
WJJTX	K17
WJLO	J16
WJTX	K16
WLNM	K91
WLNML	J72
WMK4WL4NM	O27
WMLO	J13
WMTX	K13
WNLO	J15
WNTX	K15
WSV	I26
WV	P63
WZK	H55
XEMQ	N32
XHML6	J66, K89
XHMLO	J65, K88
XHQ	N31
XVQ	N33

Nowal.cz